SOUTH PARK LOOP
PATHWAY CONNECTOR PROJECT
Teton County, Wyoming

DRAWING INDEX

Sheet Number	Sheet Title
1.0	TITLE SHEET
OVERVIEWS	
1.1	OVERVIEW
1.2	OVERVIEW
1.3	OVERVIEW
1.4	HORIZONTAL ALIGNMENT DATA
DETAILS	
2.0	TYPICAL SECTIONS
2.1	DETAILS
2.2	DETAILS
2.3	DETAILS
PLAN & PROFILES	
3.0	STA. 0+00.00 - 5+00.00
3.1	STA. 5+00.00 - 10+60.00
3.2	STA. 10+60.00 - 16+20.00
3.3	STA. 16+20.00 - 21+80.00
3.4	STA. 21+80.00 - 27+40.00
3.5	STA. 27+40.00 - 33+00.00
3.6	STA. 33+00.00 - 38+00.00
3.7	STA. 38+00.00 - 43+60.00
3.8	STA. 43+60.00 - 49+20.00
3.9	STA. 49+20.00 - 54+80.00
3.10	STA. 54+80.00 - 60+40.00
3.11	STA. 60+40.00 - 66+00.00
3.12	STA. 66+00.00 - 71+60.00
3.13	STA. 71+60.00 - 76+60.00
3.14	STA. 76+60.00 - 82+20.00
3.15	STA. 82+20.00 - 87+80.00
3.16	STA. 87+80.00 - 93+40.00
3.17	STA. 93+40.00 - 99+00.00
3.18	STA. 99+00.00 - 104+60.00
RETAINING WALLS	
4.0	RETAINING WALL A
4.1	RETAINING WALL A
4.2	RETAINING WALL B
4.3	RETAINING WALL B
4.4	RETAINING WALL B
4.5	RETAINING WALL C
4.6	RETAINING WALL C
4.7	KEYSTONE RETAINING WALL

PLAN DETAIL SHEETS	
5.0	SP CEMETARY RD X-ING
5.1	GT NORTH X-ING
5.2	GT SOUTH X-ING
5.3	SP RANCH RD X-ING
5.4	SP RANCH RD DETAILS
5.5	WILSON ROAD CROSSING
5.6	SPLR AT GRADE X-ING
5.7	MELODY CROSSING
CROSS SECTIONS	
X1	Section Sheet - 1
X2	Section Sheet - 2
X3	Section Sheet - 3
X4	Section Sheet - 4
X5	Section Sheet - 5
X6	Section Sheet - 6
X7	Section Sheet - 7
X8	Section Sheet - 8
X9	Section Sheet - 9
X10	Section Sheet - 10
X11	Section Sheet - 11
X12	Section Sheet - 12
X13	Section Sheet - 13
X14	Section Sheet - 14
X15	Section Sheet - 15
X16	Section Sheet - 16
X17	Section Sheet - 17
X18	Section Sheet - 18
X19	Section Sheet - 19
X20	Section Sheet - 20
X21	Section Sheet - 21
WYDOT STANDARD PLANS	
1-6	703-2E CONSTRUCTION TRAFFIC CONTROL
1-12	703-1F CONSTRUCTION TRAFFIC CONTROL

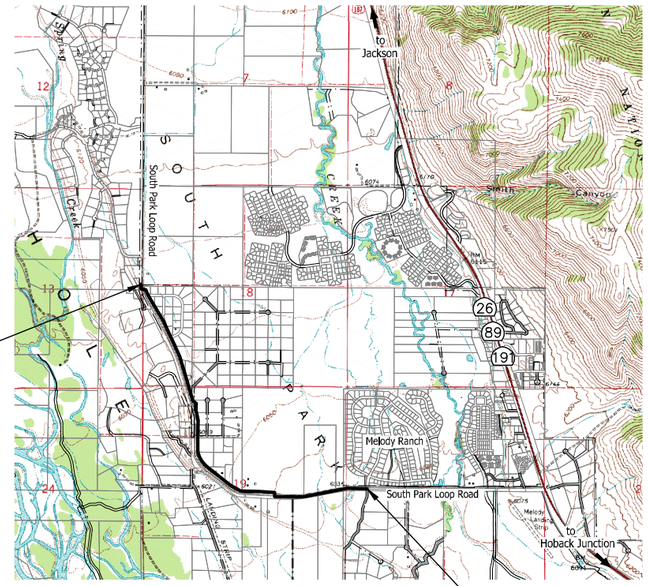

VICINITY MAP
SCALE: N.T.S.

LEGENDS

EXISTING

- PROPERTY LINE
- EASEMENT LINE
- EDGE OF ASPHALT
- CENTERLINE OF ROAD
- EDGE OF GRAVEL
- EXISTING CONTOUR
- OVERHEAD POWER
- BUCK RAIL FENCE
- WOOD RAIL FENCE
- WIRE FENCE
- OLD BROKEN FENCE
- GAS LINE
- OVERHEAD POWER LINE
- EDGE OF WATER
- FLOW LINE DITCH
- TREE LINE
- WETLANDS
- TELEPHONE PEDESTAL
- POWER TRANSFORMER
- CABLE TV PEDESTAL
- GAS DELINEATOR
- POWER VAULT
- IRRIGATION RISER
- MAIL BOX
- FIBER OPTIC BOX
- TELEPHONE VAULT
- SEWER CLEANOUT
- CULVERT
- SIGN
- GUY WIRE
- LIGHT POLE
- UTILITY POLE
- POWER POLE
- METAL ART WORK
- COTTONWOOD TREE
- WILLOW BUSH
- DECIDUOUS TREE
- SPRUCE TREE
- PINE TREE
- BRASS CAP
- PROPERTY CORNER REBAR WITH CAP
- T-STAKE
- CONTROL POINT

PROPOSED

- DESIGN CONTOURS
- CENTERLINE OF PATHWAY
- STRIPPING/PATHWAY LIMITS
- CONSTRUCTION FENCE
- STAGING/STOCKPILE/CONSTRUCTION LIMITS
- SILT FENCE
- LIMIT OF DISTURBANCE
- SEDIMENT LOG
- CULVERT

90% COMPLETE SUBMITTAL

SET No. _____

REV.	DATE	SURVEYED	ENGINEERED	DRAWN	CHECKED	APPROVED
	3/25/16	NE	DD	DB	DD	DD

NELSON ENGINEERING
P.O. BOX 1599, JACKSON WYOMING (307) 733-2087

DRAWING TITLE: TITLE SHEET

JOB TITLE: SOUTH PARK LOOP CONNECTOR PATHWAY PROJECT TETON COUNTY, WY

DRAWING NO: 1.0

JOB NO: 15-257-02

S:\Proj\2015\257-02 CDesign - South Park Loop Pathway Connector\Drawings\Layout Drawings\Title.dwg LTab - Mar 25 2016 04:56:01 pm PLOTTED BY: hwirkner DWG FORMAT: 151

S:\Proj2015\257-02 (Design - South Park Loop Pathway Connector)\Drawings\Layout Drawings\Overview.dwg (11 OVERVIEW) - Mar 25 2016 05:07:53 pm PLOTTED BY: karlchner DWG FORMAT: 191

DRAWING NO 1.1	JOB TITLE SOUTH PARK LOOP CONNECTOR PATHWAY PROJECT TETON COUNTY, WY	DRAWING TITLE OVERVIEW STA. 0+00 – 30+00	NELSON ENGINEERING P.O. BOX 1599, JACKSON WYOMING (307) 733-2087	DATE 3/25/16	REV.
JOB NO 15-257-02				SURVEYED NE	
				ENGINEERED DD	
				DRAWN DB	
				CHECKED DD	
				APPROVED DD	

S:\Proj2015\257-02 (Design - South Park Loop Pathway Connector)\Drawings\Layout Drawings\Overview.dwg (12 AERIAL PLANNING EXHIBIT) - Mar 25 2016 05:08:11 pm PLOTTED BY: karlchner DWG FORMAT: 191

DRAWING NO: 1.2	JOB TITLE: SOUTH PARK LOOP CONNECTOR PATHWAY PROJECT TETON COUNTY, WY	DRAWING TITLE: OVERVIEW STA. 30+00 – 39+00	NELSON ENGINEERING P.O. BOX 1599, JACKSON WYOMING (307) 733-2087	DATE: 3/25/16	REV.
JOB NO: 15-257-02				SURVEYED: NE	
				ENGINEERED: DD	
				DRAWN: DB	
				CHECKED: DD	
				APPROVED: DD	

DRAWING NO 1.3	JOB TITLE SOUTH PARK LOOP CONNECTOR PATHWAY PROJECT TETON COUNTY, WY	DRAWING TITLE OVERVIEW STA. 80+00 – 105+00	NELSON ENGINEERING P.O. BOX 1599, JACKSON WYOMING (307) 733-2087	DATE 3/25/16	REV.
JOB NO 15-257-02				SURVEYED NE	
				ENGINEERED DD	
				DRAWN DB	
				CHECKED DD	
				APPROVED DD	

LINE TABLE: ALIGNMENTS		
LINE #	BEARING	LENGTH
L1	S35.344513E	32.21
L2	S09.102216E	57.11
L3	S12.124826E	30.31
L4	S11.434531W	8.12
L5	N76.544309E	31.31
L6	S17.022607E	73.56
L7	S18.533855E	36.75
L8	S28.590929E	635.25
L9	S26.410896E	157.03
L10	S19.234825E	26.08
L11	S26.492437E	76.52
L12	S26.410896E	231.44
L13	S26.214855E	232.26
L14	S16.201169E	458.68
L15	S16.162443E	492.47
L16	S49.405279E	41.46
L17	S49.445031E	14.25
L18	S25.344894W	11.26
L19	S03.264033E	36.98
L20	S10.275718E	70.20

LINE TABLE: ALIGNMENTS		
LINE #	BEARING	LENGTH
L21	S07.103501E	11.33
L22	S00.360097E	330.15
L23	S29.175091E	5.63
L24	S00.422858E	39.77
L25	S24.410479W	8.35
L26	S00.374698E	205.05
L27	S01.225207E	135.74
L28	S55.225959E	513.27
L29	S51.125650E	224.54
L30	S50.113041E	95.77
L31	S84.031222E	41.86
L32	S89.033663E	159.41
L33	S87.425873E	168.45
L34	S86.333396E	101.98
L35	N84.093365E	34.23
L36	S02.175084W	36.56
L37	N87.542026E	42.56
L38	S87.261676E	61.41
L38	S33.103962E	28.41
L39	S87.260411E	122.89

LINE TABLE: ALIGNMENTS		
LINE #	BEARING	LENGTH
L40	N86.555170E	17.11
L41	N80.143676E	66.79
L42	N78.163532E	383.03
L43	S29.092893E	44.68
L43	N79.042765E	194.06
L44	N82.051516E	45.58
L45	N86.434771E	59.94
L46	N87.564358E	91.13
L47	N89.171068E	143.63
L48	S89.421648E	198.86

CURVE TABLE: ALIGNMENTS					
CURVE #	ARC LENGTH	RADIUS	CHORD BEARING	CHORD LENGTH	DELTA ANGLE
C9	261.82	6522.00	S27°50'09"E	261.80	002°18'00"
C36	198.69	3778.00	N80°34'51"E	198.66	003°00'48"
C16	39.44	30.00	S12°05'01"E	36.66	075°19'39"
C17	50.66	100.00	S11°04'04"W	50.12	029°01'29"
C18	24.51	200.00	S6°57'19"E	24.49	007°01'17"
C5	12.01	8.00	S60°03'51"E	10.92	086°02'51"
C15	43.73	75.00	S32°58'39"E	43.11	033°24'28"
C20	137.73	1200.00	S3°53'18"E	137.65	006°34'34"
C19	11.48	200.00	S8°49'16"E	11.48	003°17'22"
C35	103.75	3022.00	N79°15'36"E	103.75	001°58'01"
C37	119.75	1478.00	N84°24'31"E	119.72	004°38'33"
C38	17.61	1000.00	N89°47'27"E	17.61	001°00'33"
C14	455.01	2600.00	S21°21'00"E	454.43	010°01'37"
C33	316.85	3222.00	N89°44'54"E	316.73	005°38'04"
C34	291.80	2500.00	N83°35'14"E	291.63	006°41'15"
C4	16.03	8.00	S45°40'46"E	13.48	114°49'02"
C3	8.36	20.00	S0°14'31"E	8.30	023°56'34"
C2	13.83	30.00	S22°22'34"E	13.70	026°24'23"
C1	9.90	30.00	S26°07'17"E	9.86	018°54'57"
C26	428.47	725.00	S67°07'21"E	422.26	033°51'42"
C27	43.69	500.00	S86°33'24"E	43.68	005°00'24"
C28	201.91	10000.00	S87°08'16"E	201.91	001°09'25"
C30	17.13	10.00	S46°46'18"E	15.11	098°08'17"
C29	32.40	200.00	N88°48'00"E	32.36	009°16'52"
C10	5.09	40.00	S23°02'29"E	5.09	007°17'21"
C11	6.48	50.00	S23°06'36"E	6.48	007°25'36"
C12	5.55	50.00	S30°00'02"E	5.54	006°21'15"
C13	5.67	50.00	S29°55'54"E	5.66	006°29'31"
C6	10.57	50.00	S23°05'57"E	10.55	012°07'03"
C7	8.96	50.00	S24°01'34"E	8.95	010°15'50"
C8	35.23	200.00	S23°56'24"E	35.18	010°05'31"
C21	15.03	30.00	S14°56'56"E	14.87	028°41'50"
C22	14.97	30.00	S15°00'10"E	14.81	028°35'22"
C23	13.30	30.00	S11°59'18"W	13.19	025°23'33"
C24	17.67	40.00	S12°01'39"W	17.53	025°18'52"
C31	16.47	10.00	S44°53'54"E	14.67	094°23'31"
C32	16.25	200.00	S89°45'58"E	16.25	004°39'23"
C25	518.38	550.00	S28°22'56"E	499.41	054°00'08"

CURVE TABLE: ALIGNMENTS					
CURVE #	ARC LENGTH	RADIUS	CHORD BEARING	CHORD LENGTH	DELTA ANGLE
C39	32.87	75.00	N11°49'36"E	32.60	025°06'30"
C40	31.15	100.00	N15°27'30"E	31.02	017°50'42"

LINE TABLE: ALIGNMENTS		
LINE #	BEARING	LENGTH
L49	N00.433947W	50.90
L50	N24.225082E	13.36
L51	N06.320879E	121.03

NELSON ENGINEERING
P.O. BOX 1599, JACKSON WYOMING (307) 733-2087

DATE	3/25/16	REV.
SURVEYED	NE	
ENGINEERED	DD	
DRAWN	DB	
CHECKED	DD	
APPROVED	DD	

DRAWING TITLE: HORIZONTAL ALIGNMENT DATA

JOB TITLE: SOUTH PARK LOOP CONNECTOR PATHWAY PROJECT TETON COUNTY, WY

DRAWING NO: 1.4

JOB NO: 15-257-02

S:\Proj\2015\257-02 (Design - South Park Loop Pathway Connector)\Drawings\SPLR PATH DESIGN.dwg CLINE & CURVE TABLES) - Mar 25 2016 05:09:11 pm PLOTTED BY karichner DWG FORMAT: 191

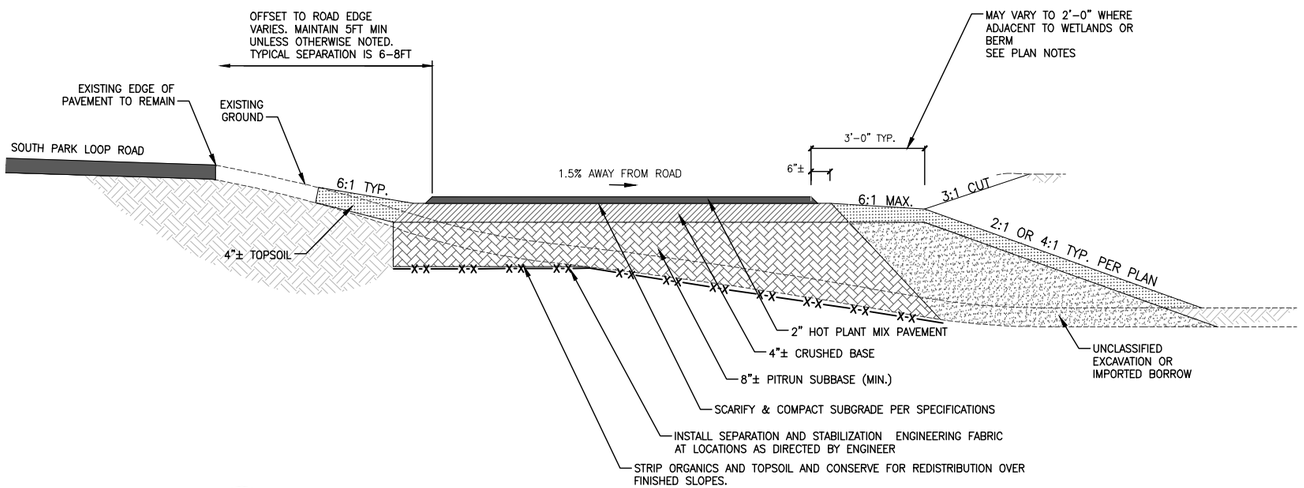

1 / 2.0 TYPICAL SECTION: CROSS SLOPE LEFT/RIGHT CUT/FILL CONDITION

1/2" = 1'-0"

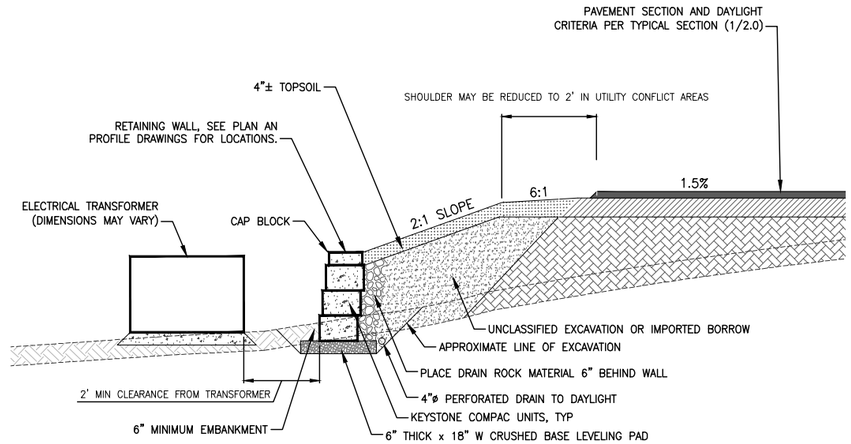

NOTE:
RETAINING WALL SHOWN APPLICABLE TO WALLS STA. 21+80± TO STA. 23+80±
SEE 4.# DRAWINGS FRO RETAINING WALLS A, B, AND C

4 / ### TYPICAL SECTION: SHORT WALL DAYLIGHT

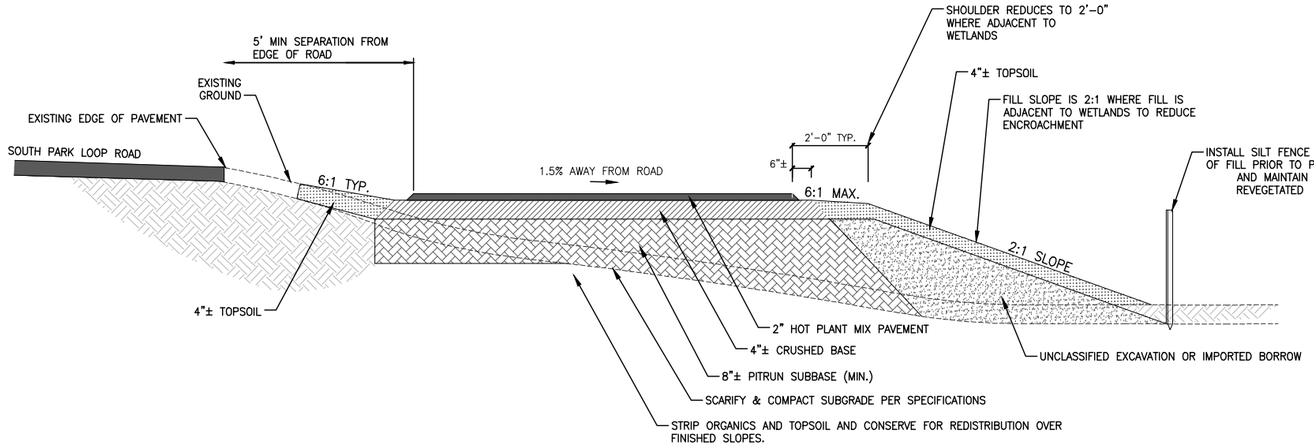

2 / ### PATHWAY SECTION: ADJACENT TO WETLAND

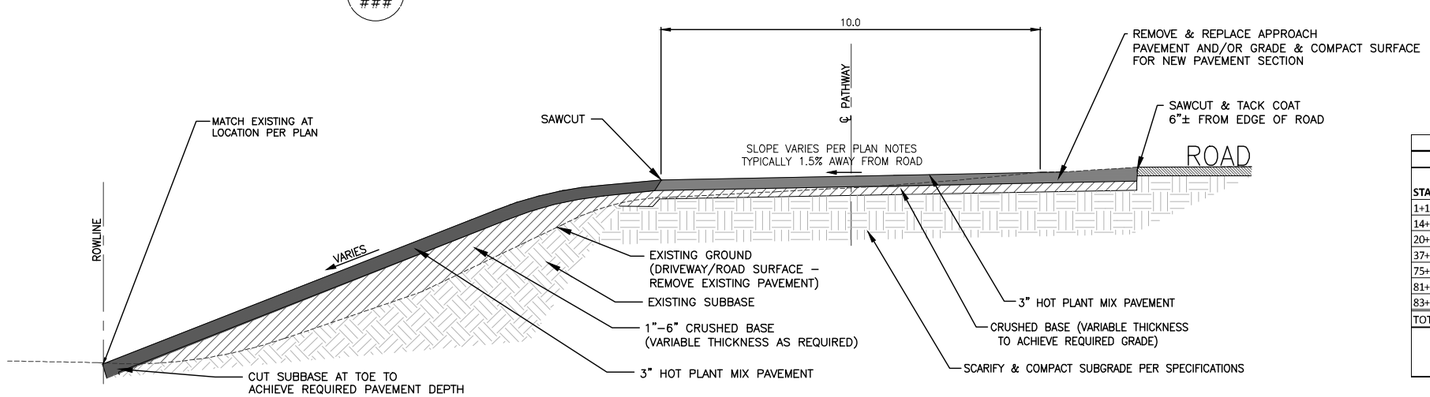

3 / ### PATHWAY SECTION: APPROACH PAVING DETAIL

	CYDS							
	UNCLASSIFIED EXCAVATION		EMBANKMENT					
STATION RANGE	TOPSOIL STRIP	CUT MATERIAL	FILL MATERIAL	PITRUN SUBBASE	IMPORTED BORROW	PLACED TOPSOIL	TOPSOIL CY	REMARKS
1+15 - 14+40	417	134	542	554	239	2235	248	Project Start to Wall A
14+40 - 20+20	152	33	698	145	698	610	68	Retaining Walls (Structural Fill)
20+20 - 36+80	942	115	595	775	-150	2807	312	Wall B to South Park Ranch Rd
37+20 - 74+80	1128	178	1972	1235	802	1225	136	South Park Ranch Rd to South X-ing
75+20 - 81+20	162	36	89	352	-25	749	83	South X-ing to Wall C
81+20 - 83+00	50	10	148	45	148	267	30	Retaining Walls (Structural Fill)
83+00 - 100+15	521	120	760	650	418	2688	299	Wall C to S Cortland Drive
TOTALS	3372	625	4804	3757	1283	10580	1176	
PAY ITEM QTY:	3900 CYD				2265 TONS	10580 SY		

5 / ### EARTHWORK QUANITIES

REV.	DATE	
	3/25/2016	SURVEYED
	NE	ENGINEERED
	NE	DRAWN
	AL	CHECKED
	DD	APPROVED
	DD	

NELSON ENGINEERING
P.O. BOX 1599, JACKSON WYOMING (307) 733-2087

DRAWING TITLE: DETAILS TYPICAL SECTIONS

JOB TITLE: SOUTH PARK LOOP CONNECTOR PATHWAY PROJECT TETON COUNTY, WY

DRAWING NO: 2.0

JOB NO: 15-257-02

S:\Proj\2015\257-02 (Design - South Park Loop Pathway Connector)\Drawings\DETAILS & SECTIONS.dwg (TYPICAL SECTIONS) - Mar 28 2016 08:24:45 am PLOTTED BY: kwickner

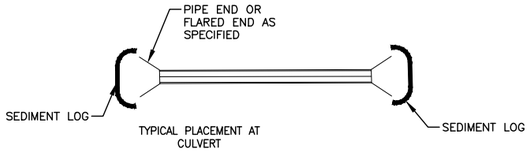

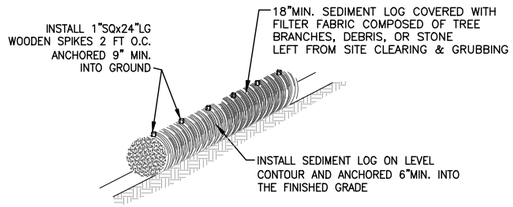

BRUSH BARRIER SHALL BE A CONTINUOUS RUN WITH NO GAPS

NOTE:
DO NOT INSTALL SEDIMENT LOGS IN IRRIGATIONS DITCHES

1 / 2.1 SEDIMENT LOG DETAIL

N.T.S.

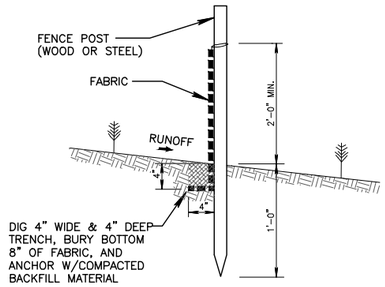

4 / 2.1 SILT FENCE SECTION DETAIL

N.T.S.

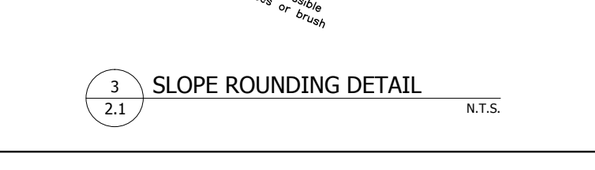

2 / 2.1 SLOPE TRANSITION DETAIL

N.T.S.

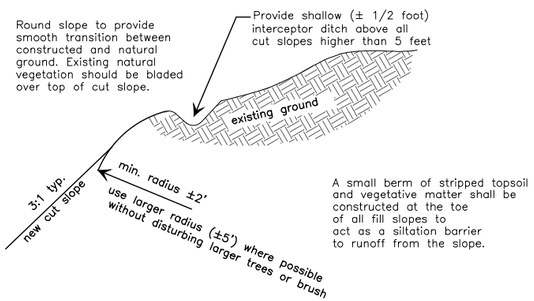

3 / 2.1 SLOPE ROUNDING DETAIL

N.T.S.

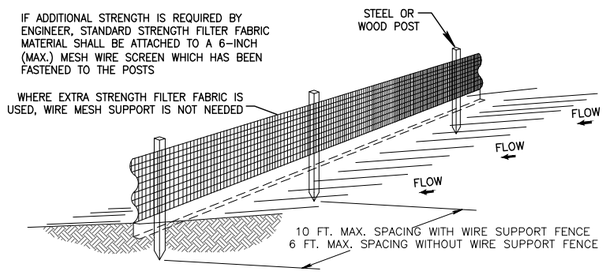

NOTES:

1. THE HEIGHT OF A SILT FENCE SHALL NOT EXCEED 36 INCHES (90 CM).
2. THE FILTER FABRIC SHALL BE PURCHASED IN A CONTINUOUS ROLL CUT TO THE LENGTH OF THE BARRIER TO AVOID THE USE OF JOINTS.
3. POSTS SHALL BE SPACED A MAXIMUM OF 10 FEET (3 M) APART AT THE BARRIER LOCATION AND DRIVEN SECURELY INTO THE GROUND A MINIMUM OF 12 INCHES (30 CM). WHEN EXTRA STRENGTH FABRIC IS USED WITHOUT THE WIRE SUPPORT FENCE, POST SPACING SHALL NOT EXCEED 6 FEET (1.8 M).
4. A TRENCH SHALL BE EXCAVATED APPROXIMATELY 4 INCHES (10 CM) WIDE AND 4 INCHES (10 CM) DEEP ALONG THE LINE OF POSTS AND UPSLOPE FROM THE BARRIER.
5. WHEN STANDARD STRENGTH FILTER FABRIC IS USED, A WIRE MESH SUPPORT FENCE SHALL BE FASTENED SECURELY TO THE UPSLOPE SIDE OF THE POSTS USING HEAVY DUTY WIRE STAPLES AT LEAST 1 INCH (25 MM) LONG, TIE WIRES, OR HOG RINGS. THE WIRE SHALL EXTEND INTO THE TRENCH A MINIMUM OF 2 INCHES (5 CM) AND SHALL NOT EXTEND MORE THAN 36 INCHES (90 CM) ABOVE THE ORIGINAL GROUND SURFACE.
6. THE STANDARD STRENGTH FILTER FABRIC SHALL BE STAPLED OR WIRED TO THE FENCE, AND 8 INCHES (20 CM) OF THE FABRIC SHALL BE EXTENDED INTO THE TRENCH. THE FABRIC SHALL NOT EXTEND MORE THAN 36 INCHES (90 CM) ABOVE THE ORIGIONAL GROUND SURFACE.
7. THE TRENCH SHALL BE BACKFILLED AND THE SOIL COMPACTED OVER THE FILTER FABRIC.
8. FABRIC AND INSTALLATION TECHNIQUES TO BE APPROVED BY ENGINEER.

5 / 2.1 SILT FENCE INSTALLATION DETAIL

N.T.S.

REV.	DATE	3/25/2016
	SURVEYED	NE
	ENGINEERED	NE
	DRAWN	NE
	CHECKED	DD
	APPROVED	DD

NELSON ENGINEERING
P.O. BOX 1599, JACKSON WYOMING (307) 733-2087

DRAWING TITLE
DETAILS

JOB TITLE
SOUTH PARK LOOP
CONNECTOR PATHWAY PROJECT
TETON COUNTY, WY

DRAWING NO 2.1

JOB NO 15-257-02

S:\Proj\2015\257-02 (Design - South Park Loop Pathway Connector)\Drawings\DETAILS & SECTIONS.dwg (21 DETAILS) - Mar 25 2016 05:10:02 pm PLOTTED BY kwirkner

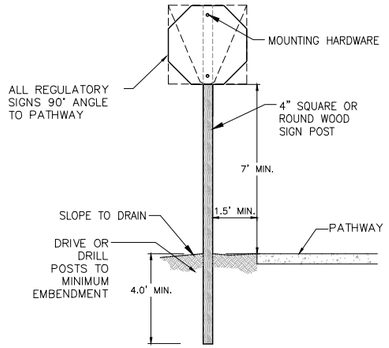

2 / 2.3 SIGN DETAIL
N.T.S.

NOTES:
1. LATERAL OFFSET FROM ROADWAY TO SIGN IS 12 FEET MIN. FROM EDGE OF TRAVEL WAY
2. STOP/YIELD SIGNS TO BE SETBACK 4 FEET FROM EDGE OF CROSSWALK/PATHWAY

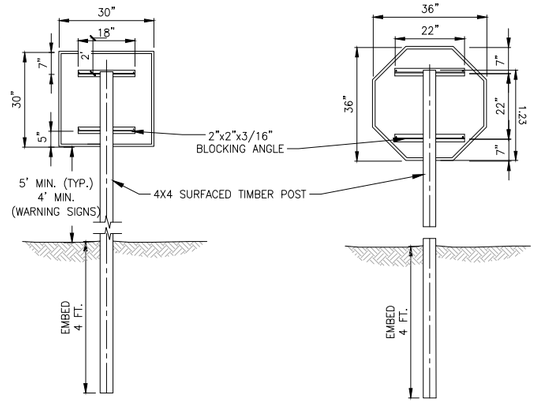

8 / 2.4 ROADWAY SIGN DETAILS
N.T.S.

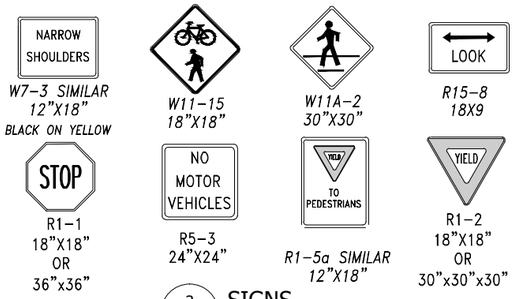

3 / 2.3 SIGNS
N.T.S.

STATION	SIDE	SIGN	OFFSET FROM EOP	REMARKS	RELATIVE LOCATION/FEATURE
1+70	RT	WAYFINDER SIGN	2	REMOVE EXISTING SIGN & RESET	SP CEMETERY ROAD
2+80±	RT	STOP & NO MOTOR VEHICLES	1.5	OPPOSE SIGNS ON SAME POST	NORTHERN CROSSING SP LOOP RD
3+30±	LT	STOP & NO MOTOR VEHICLES	1.5	OPPOSE SIGNS ON SAME POST	NORTHERN CROSSING SP LOOP RD
4+40±	RT	"LOOK"	1.5	FACING WEST	CROSSING N GRAND TETON CIRCLE
4+60±	LT	"LOOK"	1.5	FACING EAST	CROSSING N GRAND TETON CIRCLE
6+40±	RT	NARROW SHOULDER	1	FACING NORTH	
6+80±	LT	NARROW SHOULDER	1	FACING SOUTH	
23+00±	RT	NARROW SHOULDER	1	FACING NORTH	
23+70±	LT	NARROW SHOULDER	1	FACING SOUTH	
36+50±	RT	"LOOK"	1.5	FACING NORTH	SP RANCH RD CROSSING
37+10±	LT	"LOOK"	1.5	FACING SOUTH	SP RANCH RD CROSSING
44+60±	RT	"LOOK"	1.5	FACING NORTH	WILSON RD CROSSING
45+10±	LT	"LOOK"	1.5	FACING SOUTH	WILSON RD CROSSING
74+75±	RT	STOP & NO MOTOR VEHICLES	1.5	OPPOSE SIGNS ON SAME POST	SOUTHERN CROSSING SP LOOP RD
75+20±	LT	STOP & NO MOTOR VEHICLES	1.5	OPPOSE SIGNS ON SAME POST	SOUTHERN CROSSING SP LOOP RD
85+90±	RT	NARROW SHOULDER	1	FACING NORTH	
87+10±	LT	NARROW SHOULDER	1	FACING SOUTH	
93+80±	RT	NARROW SHOULDER	1	FACING NORTH	
94+20±	LT	NARROW SHOULDER	1	FACING SOUTH	
95+80±	RT	NARROW SHOULDER	1	FACING NORTH	
97+90±	LT	NARROW SHOULDER	1	FACING SOUTH	
100+00±	RT	"LOOK"	1.5	FACING NORTH	CROSSING CORTLAND DRIVE
100+75±	LT	"LOOK"	1.5	FACING SOUTH	CROSSING CORTLAND DRIVE
105+50±	RT	STOP (R1-1)	1.5	SET AT EOP FACING NORTH ON OTHER SIDE OF SP LOOP RD (SEE SHEET 5.7)	CROSSING: MELODY RANCH SPUR
105+60±	LT	STOP (R1-1)	1.5	SET AT EOP FACING SOUTH (SEE SHEET 5.7)	CROSSING: MELODY RANCH SPUR

2 / 2.4 PATHWAY SIGN SCHEDULE

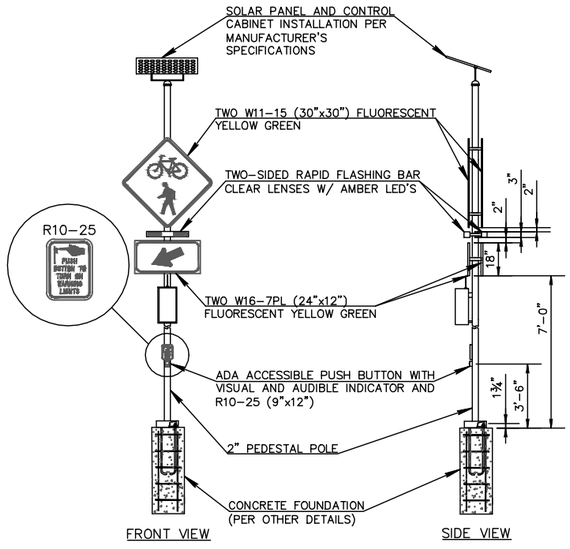

6 / 2.1 RECTANGULAR RAPID FLASHING BEACON DETAIL (RRFB)
N.T.S.

STA	Description	SIGN	REMARKS
2+20±	large sign adjacent	SOUTH PARK CEMETERY	Ensure Toe of Pathway fill does not encroach
2+50±	SET NEW SIGN	STOP (R1-1)	SET FACING "UP" SP CEMETERY ROAD
3+00±	SET NEW SIGNS	"BIKES ENTERING HIGHWAY 100 FT" "CAUTION AHEAD"	SET 100' NORTH OF EOP, FACING NORTH
3+00±	SET NEW SIGNS	"PEDESTRIANS & BICYCLES GRAPHIC" & RRFB	SET 5' NORTH OF EOP, FACING NORTH
3+20±	SET NEW SIGNS	"BIKES ENTERING HIGHWAY 100 FT" "CAUTION AHEAD"	SET 100' SOUTH OF EOP, FACING SOUTH
3+20±	SET NEW SIGNS	"PEDESTRIANS & BICYCLES GRAPHIC" & RRFB	SET 5' SOUTH OF EOP, FACING SOUTH
4+28±	sign post within grading extents	STREET NAME & STOP SIGN	REMOVE & RESET STREET SIGN. RELOCATE STOP SIGN TO OPPOSITE SIDE OF DITCH WITH "SP-2" SIGN ON NEW POST (SEE SHEET 5.1)
4+28±	SET NEW SIGN	SP-2	SEE SHEET 5.1
7+11±	sign post in middle of path	BIKES ENTERING HIGHWAY 500 FT	REMOVE
12+09±	sign post in middle of path	BIKES ENTERING HIGHWAY 1000 FT	REMOVE
16+50±	sign post in middle of path	STREET NAME & STOP SIGN	REMOVE & RESET STREET SIGN. RELOCATE STOP SIGN TO OPPOSITE SIDE OF DITCH WITH "SP-2" SIGN ON NEW POST (SEE SHEET 5.2)
16+60±	SET NEW SIGN	SP-2	SEE SHEET 5.2
21+40±	sign post in middle of path	ADDRESS MARKER (BY OWNER)	REMOVE & RESET
36+80±	SET NEW SIGNS	"BIKES ENTERING HIGHWAY 100 FT" "CAUTION AHEAD"	SET 100' NORTH OF EOP, FACING NORTH
36+80	SET NEW SIGN	W11-15	SET 5' FROM EOP, FACING NORTH (SEE SHEET 5.3)
36+80±	SET NEW SIGNS	W11-15 & RRFB	SET 5' NORTH OF EOP, FACING NORTH
37+20±	SET NEW SIGNS	"BIKES ENTERING HIGHWAY 100 FT" "CAUTION AHEAD"	SET 100' SOUTH OF EOP, FACING SOUTH
37+20±	SET NEW SIGN	W11-15	SET 5' SOUTH OF EOP, FACING SOUTH (SEE SHEET 5.3)
37+20±	SET NEW SIGNS	W11-15 & RRFB	SET 5' SOUTH OF EOP, FACING SOUTH
38+10±	sign post within grading extents	SOUTH PARK RANCH ROAD STREET SIGN	REMOVE & RESET
44+58±	sign post in middle of path	WILSON ROAD STREET SIGN	REMOVE & RESET
44+60±	sign post within grading extents	STOP (R1-1)	REMOVE & RESET
44+80±	SET NEW SIGN	W11-15	SET 5' EAST OF EOP, FACING EAST (SEE SHEET 5.4)
45+10±	SET NEW SIGN	W11-15	SET 5' WEST OF EOP, FACING SOUTHWEST (SEE SHEET 5.4)
74+80±	SET NEW SIGNS	"BIKES ENTERING HIGHWAY 100 FT" "CAUTION AHEAD"	SET 100' EAST OF EOP, FACING EAST
74+80±	SET NEW SIGNS	W11-15 & RRFB	SET 5' EAST OF EOP, FACING EAST
75+00±	SET NEW SIGNS	"BIKES ENTERING HIGHWAY 100 FT" "CAUTION AHEAD"	SET 100' WEST OF EOP, FACING WEST
75+00±	SET NEW SIGNS	W11-15 & RRFB	SET 5' WEST OF EOP, FACING WEST
98+98±	sign post in middle of path	MUNGER VIEW PARK SIGN	REMOVE & RESET
100+00±	sign post in middle of path	CORTLAND DRIVE STREET NAME SIGN	REMOVE & RESET
105+50±	set new signal	RRFB	SET AT EOP ON OTHER SIDE OF SP LOOP RD (SEE SHEET 5.7)
105+50±	SET NEW SIGN	STOP (R1-1)	SET AT EOP FACING NORTH ON OTHER SIDE OF SP LOOP RD (SEE SHEET 5.7)
105+60±	set new signal	RRFB	SET AT EOP (SEE SHEET 5.7)
105+60±	set new signal	STOP (R1-1)	SET AT EOP FACING SOUTH (SEE SHEET 5.7)

7 / 2.4 ROAD SIGN SCHEDULE

REV.	DATE	
	3/25/2016	SURVEYED
	NE	ENGINEERED
	NE	DRAWN
	NE	CHECKED
	DD	APPROVED
	DD	

NELSON ENGINEERING
P.O. BOX 1599, JACKSON WYOMING (307) 733-2087

DRAWING TITLE: DETAILS SIGNAGE DETAILS & SCHEDULE

JOB TITLE: SOUTH PARK LOOP CONNECTOR PATHWAY PROJECT TETON COUNTY, WY

DRAWING NO: 2.2

JOB NO: 15-257-02

DISCRETE MARKINGS & STRIPINGS

STATION	SIDE	DESCRIPTION	COLOR	REMARK
1+90	CENTER	SLOW	WHITE	APPROACHING SP CEMETERY ROAD, FACING NORTH (SEE SHEET 5.0)
3+55±	CENTER	SLOW	WHITE	APPROACHING SP LOOP ROAD, FACING SOUTH (SEE SHEET 50.)
3+85+	CENTER	SLOW	WHITE	APPROACHING GRAND TETON CIRCLE, FACING NORTH (SEE SHEET 5.0)
2+50+	RT OFF PATH	STOP LINE	WHITE	SP CEMETERY ROAD (SEE SHEET 5.0)
2+50±	LT OFF PATH	YIELD LINE (2' X 3' TEETH WITH 1' SPACES- TEETH POINTING NORTH)	WHITE	ROAD APPROACHING SP LOOP RD CROSSING (SEE SHEET 5.0)
2+87±	RT	STOP LINE	WHITE	SP LOOP ROAD CROSSING (SEE SHEET 5.0)
3+60±	RT OFF PATH	YIELD LINE (2' X 3' TEETH WITH 1' SPACES- TEETH POINTING SOUTH)	WHITE	ROAD APPROACHING SP LOOP RD CROSSING (SEE SHEET 5.0)
3+19±	LT	STOP LINE	WHITE	NORTHERN CROSSING SP LOOP RD (SEE SHEET 5.0)
4+40±	LT OFF PATH	STOP LINE	WHITE	N GRAND TETON CIRCLE DR STOP
5+05±	CENTER	SLOW	WHITE	APPROACHING GRAND TETON CIRCLE NORTH, FACING SOUTH (SEE SHEET 5.1)
16+10+	CENTER	SLOW	WHITE	APPROACHING GRAND TETON CIRCLE SOUTH, FACING NORTH (SEE SHEET 5.2)
16+60+	LT OFF PATH	STOP LINE	WHITE	S GRAND TETON CIRCLE DR STOP (SEE SHEET 5.2)
17+35±	CENTER	SLOW	WHITE	APPROACHING GRAND TETON CIRCLE SOUTH, FACING SOUTH (SEE SHEET 5.2)
36+18±	CENTER	SLOW	WHITE	APPROACHING SP RANCH RD, FACING NORTH (SEE SHEET 5.3)
36+65±	RT OFF PATH	STOP LINE	WHITE	SP RANCH RD STOP (SEE SHEET 5.3)
37+55+	CENTER	SLOW	WHITE	APPROACHING SP RANCH RD, FACING SOUTH (SEE SHEET 5.3)
36+85+	LT OFF PATH	YIELD LINE (2' X 3' TEETH WITH 1' SPACES- TEETH POINTING NORTH)	WHITE	ROAD APPROACHING SP RANCH RD CROSSING (SEE SHEET 5.3)
37+05+	RT OFF PATH	YIELD LINE (2' X 3' TEETH WITH 1' SPACES- TEETH POINTING SOUTH)	WHITE	ROAD APPROACHING SP RANCH RD CROSSING (SEE SHEET 5.3)
44+30±	CENTER	SLOW	WHITE	APPROACHING WILSON RD, FACING NORTH (SEE SHEET 5.4)
44+85±	LT OFF PATH	YIELD LINE (2' X 3' TEETH WITH 1' SPACES- TEETH POINTING EAST)	WHITE	ROAD APPROACHING WILSON RD CROSSING (SEE SHEET 5.4)
44+85±	RT OFF PATH	STOP LINE	WHITE	WILSON RD STOP (SEE SHEET 5.4)
45+00±	RT OFF PATH	YIELD LINE (2' X 3' TEETH WITH 1' SPACES- TEETH POINTING WEST)	WHITE	ROAD APPROACHING WILSON RD CROSSING (SEE SHEET 5.4)
45+58±	CENTER	SLOW	WHITE	APPROACHING WILSON RD, FACING SOUTH (SEE SHEET 5.4)
74+20+	CENTER	SLOW	WHITE	APPROACHING SOUTHERN SP LOOP RD CROSSING, FACING WEST (SEE SHEET 5.6)
74+75±	RT	STOP LINE	WHITE	APPROACHING SOUTHERN SP LOOP RD CROSSING (SEE SHEET 5.6)
74+90±	LT OFF PATH	YIELD LINE (2' X 3' TEETH WITH 1' SPACES- TEETH POINTING EAST)	WHITE	APPROACHING SOUTHERN SP LOOP RD CROSSING, FACING EAST (SEE SHEET 5.6)
75+05±	RT OFF PATH	YIELD LINE (2' X 3' TEETH WITH 1' SPACES- TEETH POINTING EAST)	WHITE	APPROACHING SOUTHERN SP LOOP RD CROSSING, FACING WEST (SEE SHEET 5.6)
75+15±	LT	STOP LINE	WHITE	APPROACHING SOUTHERN SP LOOP RD CROSSING (SEE SHEET 5.6)
75+75±	CENTER	SLOW	WHITE	APPROACHING SOUTHERN SP LOOP RD CROSSING, FACING EAST (SEE SHEET 5.6)
M:00+65±	CENTER	SLOW	WHITE	APPROACHING MELODY CROSSING, FACING NORTH (SEE SHEET 5.7)
M:00+38+	LT	STOP LINE	WHITE	APPROACHING MELODY CROSSING (SEE SHEET 5.7)
105+18±	LT OFF PATH	YIELD LINE (2' X 3' TEETH WITH 1' SPACES- TEETH POINTING WEST)	WHITE	APPROACHING MELODY CROSSING, FACING WEST (SEE SHEET 5.7)
105+90±	LT OFF PATH	YIELD LINE (2' X 3' TEETH WITH 1' SPACES- TEETH POINTING EAST)	WHITE	APPROACHING MELODY CROSSING, FACING EAST (SEE SHEET 5.7)

CONTINUOUS MARKINGS & STRIPINGS

START STATION	END STATION	DESCRIPTION	COLOR	RELATIVE LOCATION/FEATURE	REMARKS
1+50±	2+90±	4" CL STRIPE	YELLOW	NORTHERN CROSSING OF SP LOOP RD	SEE SHEET 5.0
2+90	3+15	CROSSWALK	WHITE	2'W x 10'L @ 5'-O.C. AT NORTHERN CROSSING OF SP LOOP RD	SEE SHEET 5.0
3+20+	3+55+	4" CL STRIPE	YELLOW	NORTHERN CROSSING OF SP LOOP RD	SEE SHEET 5.0
3+58+	3+85+	4" CL STRIPE	YELLOW	APPROACHING GRAND TETON CIRCLE DR CROSSING	SEE SHEET 5.0
3+90+	4+30+	4" CL STRIPE	YELLOW	APPROACHING GRAND TETON CIRCLE DR CROSSING	SEE SHEET 5.1
4+30+	4+50+	CROSSWALK	WHITE	2'W x 10'L @ 5'-O.C. AT NORTHERN CROSSING OF GRAND TETON CIRCLE DRIVE	SEE SHEET 5.1
4+50+	5+00+	4" CL STRIPE	YELLOW	APPROACHING GRAND TETON CIRCLE DR NORTH CROSSING	SEE SHEET 5.1
5+05+	5+55+	4" CL STRIPE	YELLOW	APPROACHING GRAND TETON CIRCLE DR NORTH CROSSING	SEE SHEET 5.1
15+50+	16+08+	4" CL STRIPE	YELLOW	APPROACHING GRAND TETON CIRCLE DR SOUTH CROSSING	SEE SHEET 5.2
16+10+	16+50+	4" CL STRIPE	YELLOW	APPROACHING GRAND TETON CIRCLE DR SOUTH CROSSING	SEE SHEET 5.2
16+50+	16+90+	CROSSWALK	WHITE	2'W x 10'L @ 5'-O.C. AT SOUTHERN CROSSING OF GRAND TETON CIRCLE DRIVE	SEE SHEET 5.2
16+90+	17+30+	4" CL STRIPE	YELLOW	APPROACHING GRAND TETON CIRCLE DR SOUTH CROSSING	SEE SHEET 5.2
17+35+	17+90+	4" CL STRIPE	YELLOW	APPROACHING GRAND TETON CIRCLE DR SOUTH CROSSING	SEE SHEET 5.2
35+82+	36+15+	4" CL STRIPE	YELLOW	APPROACHING SP RANCH RD CROSSING	SEE SHEET 5.3
36+20+	36+81+	4" CL STRIPE	YELLOW	APPROACHING SP RANCH RD CROSSING	SEE SHEET 5.3
36+81+	37+10+	CROSSWALK	WHITE	2'W x 10'L @ 5'-O.C. AT CROSSING OF SP RANCH RD	SEE SHEET 5.3
37+10+	37+55+	4" CL STRIPE	YELLOW	APPROACHING SP RANCH RD CROSSING	SEE SHEET 5.3
37+60+	38+10+	4" CL STRIPE	YELLOW	APPROACHING SP RANCH RD CROSSING	SEE SHEET 5.3
43+98+	44+25+	4" CL STRIPE	YELLOW	APPROACHING WILSON RD CROSSING	SEE SHEET 5.5
44+30+	44+80+	4" CL STRIPE	YELLOW	APPROACHING WILSON RD CROSSING	SEE SHEET 5.5
44+80+	45+08+	CROSSWALK	WHITE	2'W x 10'L @ 5'-O.C. AT CROSSING OF WILSON ROAD	SEE SHEET 5.5
45+08+	45+55+	4" CL STRIPE	YELLOW	APPROACHING WILSON RD CROSSING	SEE SHEET 5.5
45+62+	46+08+	4" CL STRIPE	YELLOW	APPROACHING WILSON RD CROSSING	SEE SHEET 5.5
73+85+	74+18+	4" CL STRIPE	YELLOW	APPROACHING SOUTHERN SP LOOP RD CROSSING	SEE SHEET 5.6
74+22+	74+80+	4" CL STRIPE	YELLOW	APPROACHING SOUTHERN SP LOOP RD CROSSING	SEE SHEET 5.6
74+80+	75+10+	CROSSWALK	WHITE	2'W x 10'L @ 5'-O.C. AT SOUTHERN CROSSING OF SP LOOP ROAD	SEE SHEET 5.6
75+10+	75+73+	4" CL STRIPE	YELLOW	APPROACHING SOUTHERN SP LOOP RD CROSSING	SEE SHEET 5.6
75+77+	76+10+	4" CL STRIPE	YELLOW	APPROACHING SOUTHERN SP LOOP RD CROSSING	SEE SHEET 5.6
104+55+	106+55+	4" CL STRIPE	YELLOW	APPROACHING MELODY RANCH CROSSING	SEE SHEET 5.7
105+55+	0+08+	4" CL STRIPE	YELLOW	LEFT OFF PATH TOWARDS MELODY CROSSING	SEE SHEET 5.7
0+08+	0+30+	CROSSWALK	WHITE	2'W x 10'L @ 5'-O.C. AT SOUTHERN CROSSING OF SP LOOP ROAD	SEE SHEET 5.7
00+38+	00+60+	4" CL STRIPE	YELLOW	APPROACHING SOUTHERN SP LOOP RD CROSSING	SEE SHEET 5.7
75+77+	76+10+	4" CL STRIPE	YELLOW	APPROACHING SOUTHERN SP LOOP RD CROSSING	SEE SHEET 5.7

4
2.4
STRIPING SCHEDULE

	3/25/2016	REV.
DATE		
SURVEYED	NE	
ENGINEERED	NE	
DRAWN	NE	
CHECKED	DD	
APPROVED	DD	

NELSON ENGINEERING
P.O. BOX 1599, JACKSON WYOMING (307) 733-2087

DRAWING TITLE
DETAILS
STRIPING SCHEDULE

JOB TITLE
SOUTH PARK LOOP
CONNECTOR PATHWAY PROJECT
TETON COUNTY, WY

DRAWING NO 2.3

JOB NO 15-257-02

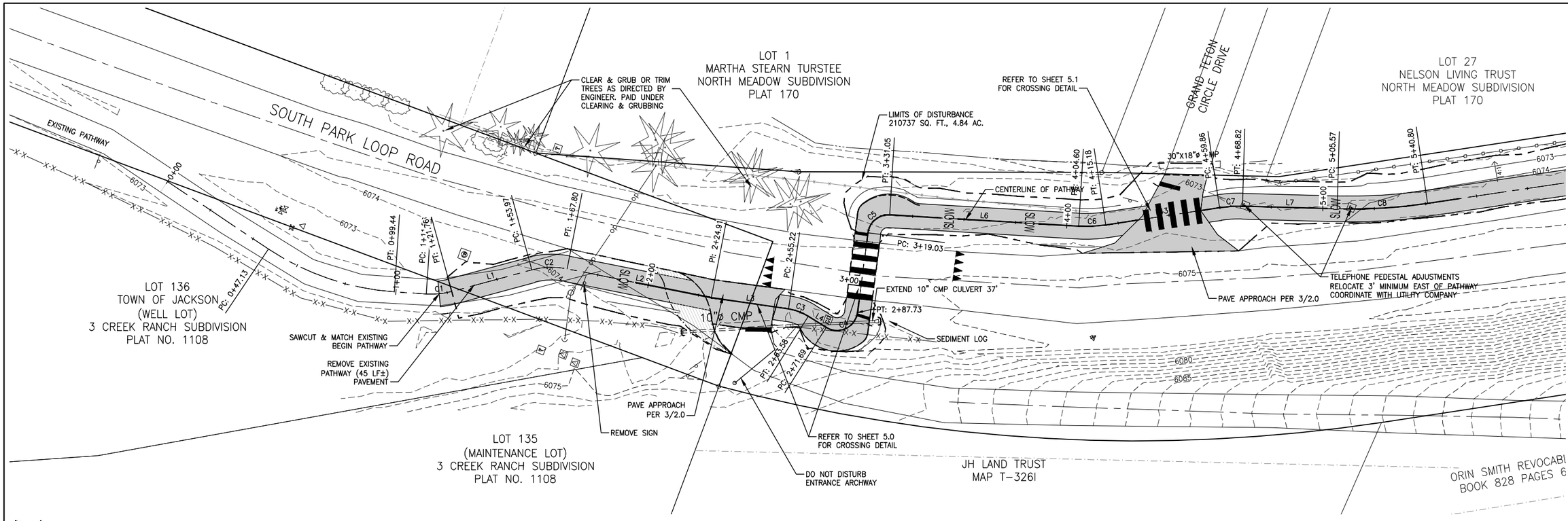

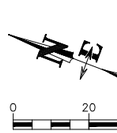

CONTRACTOR NOTE:

CAUTION: UNDERGROUND UTILITY LOCATIONS ARE NOT GUARANTEED, NOR IS THERE ANY GUARANTEE THAT ALL EXISTING UTILITIES (WHETHER FUNCTIONAL OR ABANDONED) WITHIN THE PROJECT AREA ARE SHOWN ON THESE DRAWINGS. THE CONTRACTOR SHALL DETERMINE THE EXACT LOCATION OF ALL UNDERGROUND UTILITIES BEFORE STARTING WORK. THE CONTRACTOR SHALL BE RESPONSIBLE FOR ALL DAMAGE RESULTING FROM CONTRACTORS WORK.

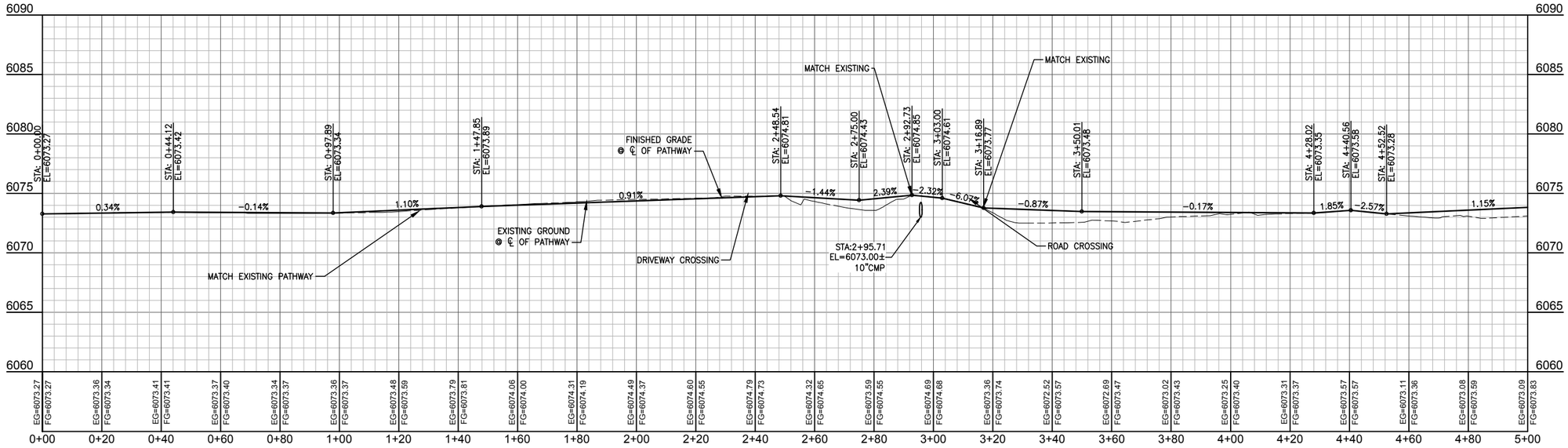

REV.	DATE	
	3/25/16	SURVEYED
	NE	ENGINEERED
	DD	DRAWN
	DB	CHECKED
	DD	APPROVED
	DD	

NELSON ENGINEERING
P.O. BOX 1599, JACKSON WYOMING (307) 733-2087

DRAWING TITLE
PATHWAY ALIGNMENT
PLAN & PROFILE
STA. 0+00.00 - 5+00.00

JOB TITLE
SOUTH PARK LOOP
CONNECTOR PATHWAY PROJECT
TETON COUNTY, WY

DRAWING NO 3.0

JOB NO 15-257-02

S:\Proj\2015\257-02 (Design - South Park Loop Pathway Connector)\Drawings\Layout Drawings\PKP PATHWAY CL 1-3.dwg (PKP)=(600 - 5)=(60) - Mar 25 2016 05:20:19 pm PLOTTED BY: kwichmer DWG FORMAT: 191

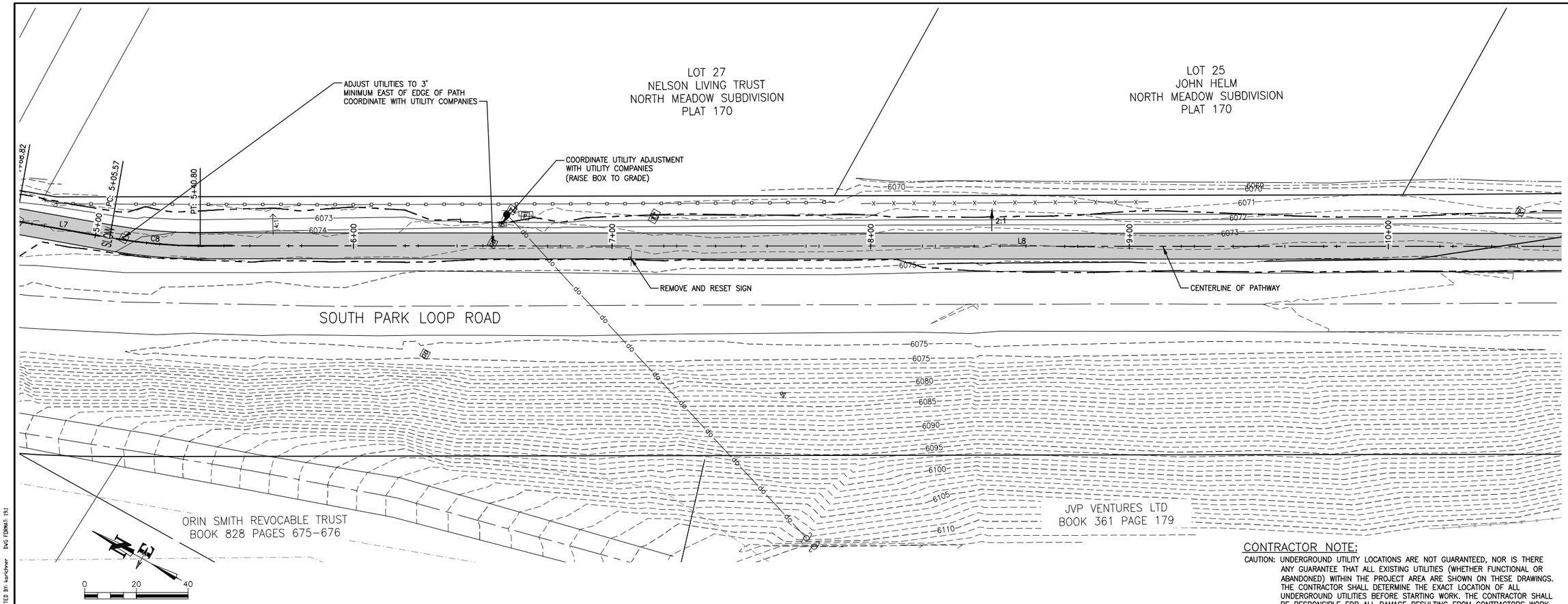

CONTRACTOR NOTE:

CAUTION: UNDERGROUND UTILITY LOCATIONS ARE NOT GUARANTEED, NOR IS THERE ANY GUARANTEE THAT ALL EXISTING UTILITIES (WHETHER FUNCTIONAL OR ABANDONED) WITHIN THE PROJECT AREA ARE SHOWN ON THESE DRAWINGS. THE CONTRACTOR SHALL DETERMINE THE EXACT LOCATION OF ALL UNDERGROUND UTILITIES BEFORE STARTING WORK. THE CONTRACTOR SHALL BE RESPONSIBLE FOR ALL DAMAGE RESULTING FROM CONTRACTORS WORK.

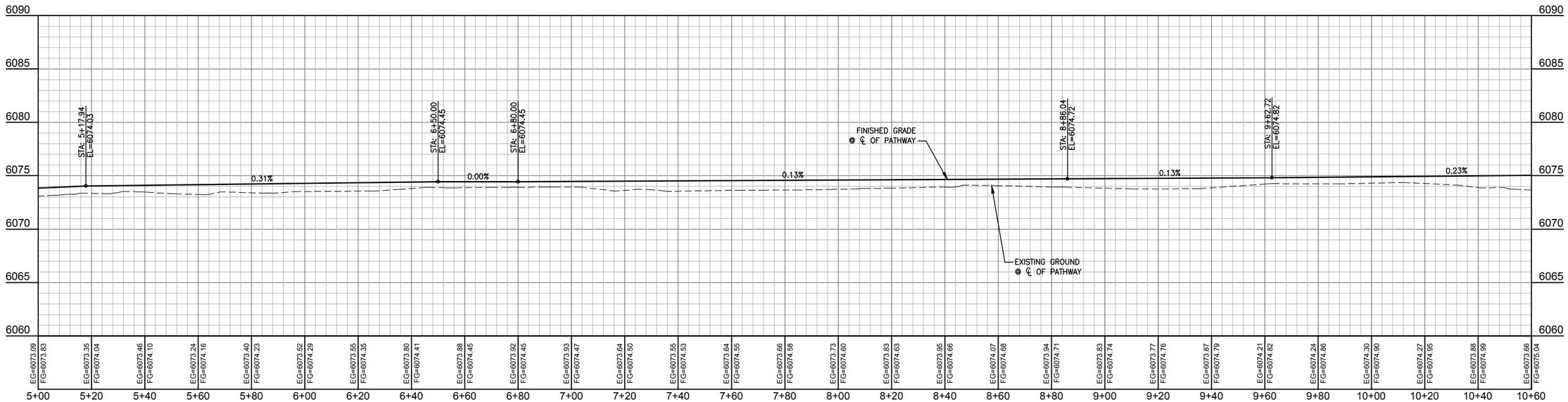

DATE	3/25/16
SURVEYED	NE
ENGINEERED	DD
DRAWN	DB
CHECKED	DD
APPROVED	DD

REV.

NELSON ENGINEERING
P.O. BOX 1599, JACKSON WYOMING (307) 733-2087

DRAWING TITLE
PATHWAY ALIGNMENT
PLAN & PROFILE
STA. 5+00.00 - 10+60.00

JOB TITLE
SOUTH PARK LOOP
CONNECTOR PATHWAY PROJECT
TETON COUNTY, WY

DRAWING NO 3.1

JOB NO 15-257-02

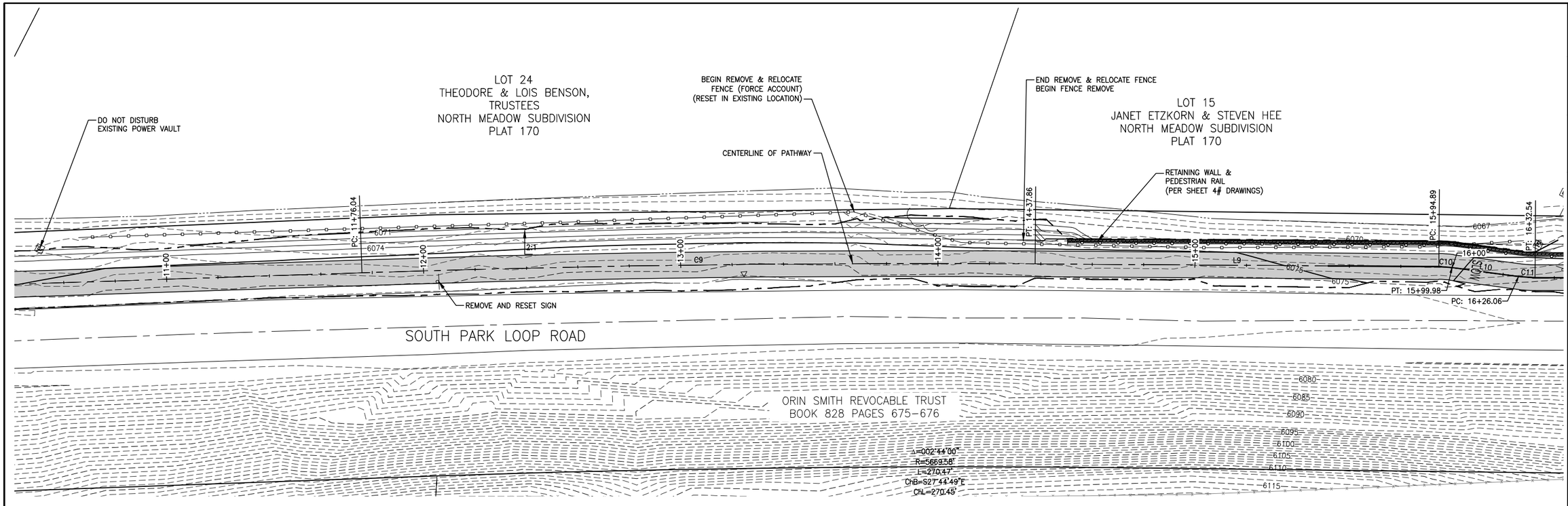

CONTRACTOR NOTE:

CAUTION: UNDERGROUND UTILITY LOCATIONS ARE NOT GUARANTEED, NOR IS THERE ANY GUARANTEE THAT ALL EXISTING UTILITIES (WHETHER FUNCTIONAL OR ABANDONED) WITHIN THE PROJECT AREA ARE SHOWN ON THESE DRAWINGS. THE CONTRACTOR SHALL DETERMINE THE EXACT LOCATION OF ALL UNDERGROUND UTILITIES BEFORE STARTING WORK. THE CONTRACTOR SHALL BE RESPONSIBLE FOR ALL DAMAGE RESULTING FROM CONTRACTORS WORK.

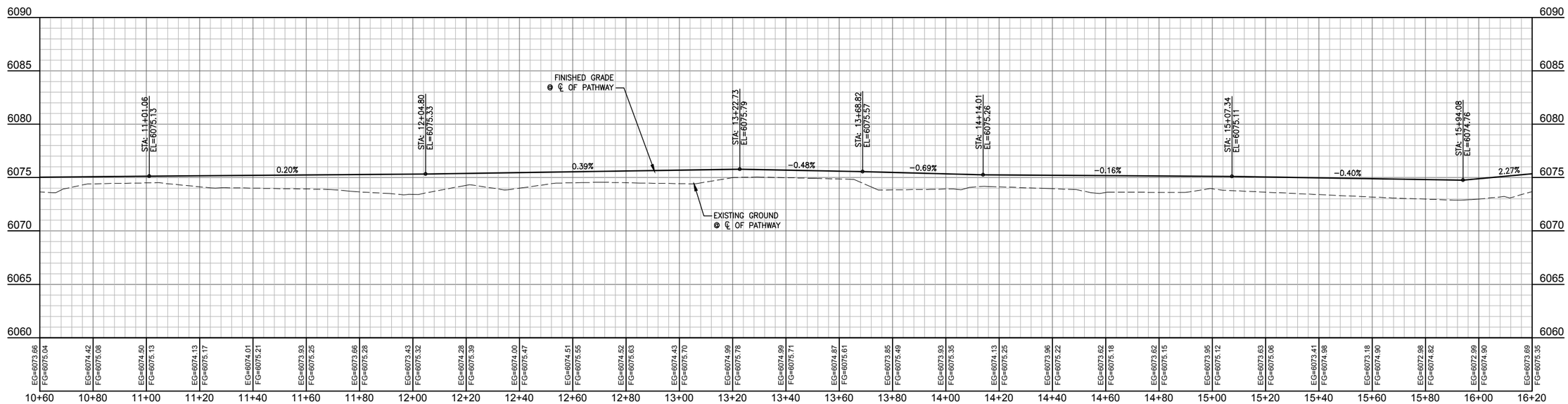

EG=6073.66	EG=6074.42	EG=6074.50	EG=6074.13
FG=6075.04	FG=6075.08	FG=6075.13	FG=6075.17
EG=6074.01	EG=6073.93	EG=6073.66	EG=6073.43
FG=6075.21	FG=6075.25	FG=6075.28	FG=6075.32
EG=6074.28	EG=6074.00	EG=6074.51	EG=6074.52
FG=6075.39	FG=6075.47	FG=6075.55	FG=6075.63
EG=6074.43	EG=6074.99	EG=6074.99	EG=6074.87
FG=6075.70	FG=6075.78	FG=6075.71	FG=6075.61
EG=6073.85	EG=6073.93	EG=6074.13	EG=6073.96
FG=6075.49	FG=6075.35	FG=6075.25	FG=6075.22
EG=6073.62	EG=6073.62	EG=6073.95	EG=6073.63
FG=6075.18	FG=6075.15	FG=6075.12	FG=6075.06
EG=6073.41	EG=6073.18	EG=6072.98	EG=6072.99
FG=6074.98	FG=6074.90	FG=6074.82	FG=6074.90

EG=6073.69			
FG=6075.35			

DATE	3/25/16	REV.
SURVEYED	NE	
ENGINEERED	DD	
DRAWN	DB	
CHECKED	DD	
APPROVED	DD	

NELSON ENGINEERING
P.O. BOX 1599, JACKSON WYOMING (307) 733-2087

DRAWING TITLE
PATHWAY ALIGNMENT
PLAN & PROFILE
STA. 10+60.00 - 16+20.00

JOB TITLE
SOUTH PARK LOOP
CONNECTOR PATHWAY PROJECT
TETON COUNTY, WY

DRAWING NO 3.2

JOB NO 15-257-02

S:\Proj\2015\257-02 Design - South Park Loop Pathway Connector\1\Drawings\Layout Drawings\P&P PATHWAY CL 1-3.dwg 6"H:1"V=6'0" - Mar 25 2016 03:31:11 pm PLOTTED BY: tsarkisian DWG FIRMAT: 191

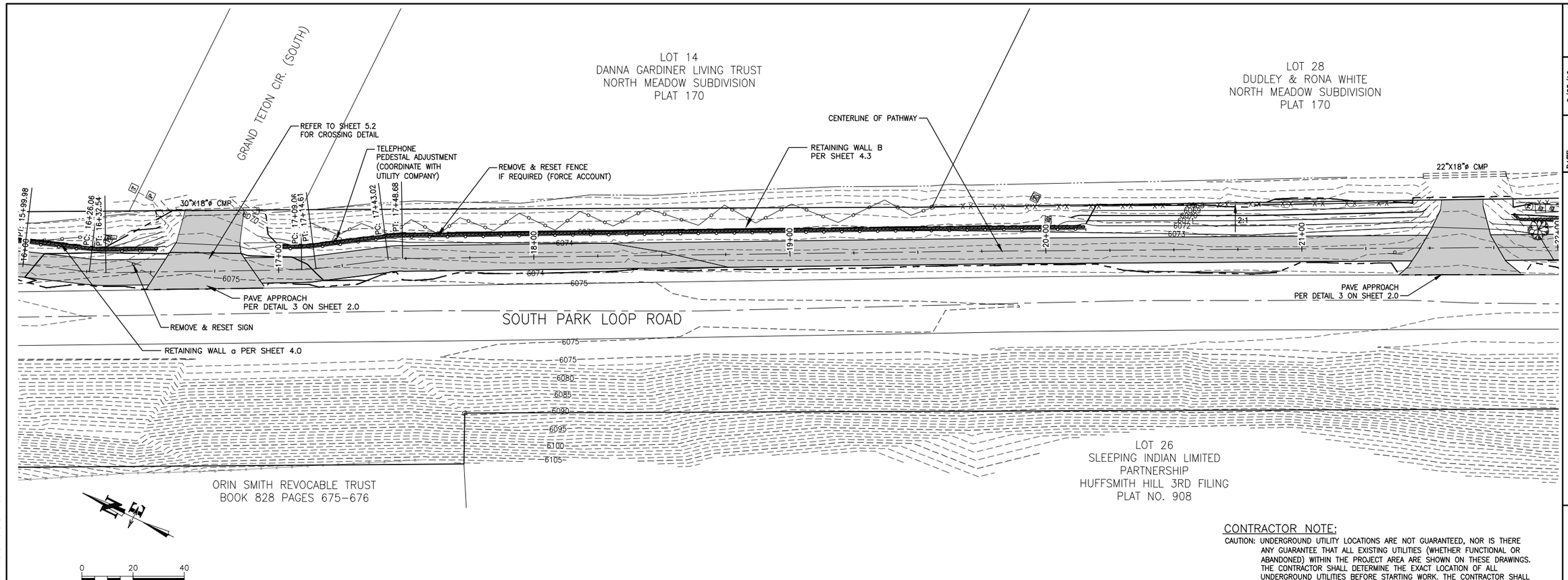

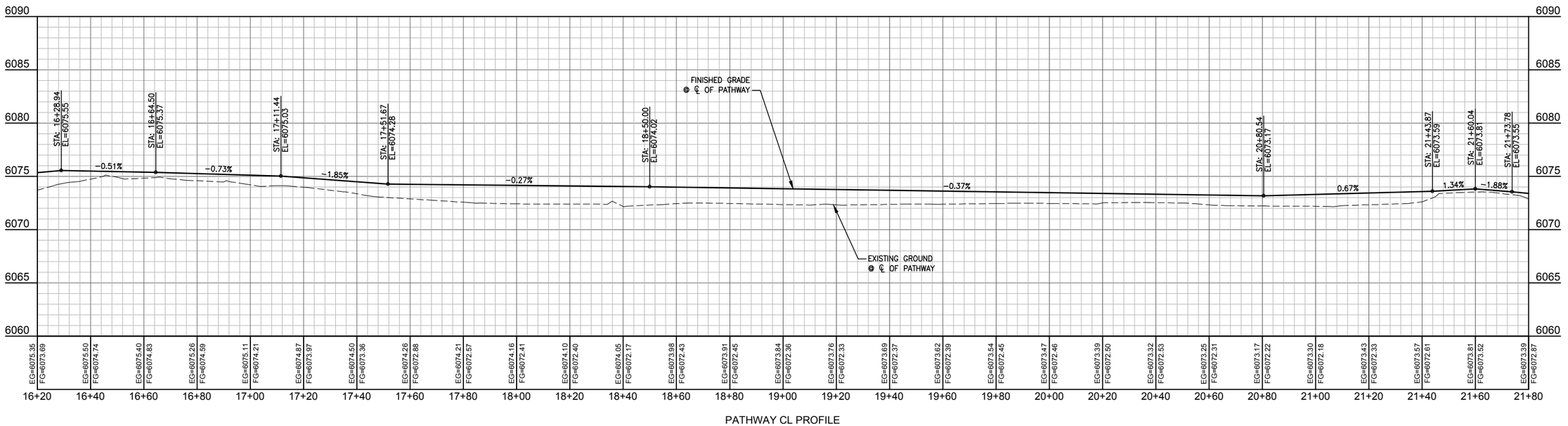

CONTRACTOR NOTE:

CAUTION: UNDERGROUND UTILITY LOCATIONS ARE NOT GUARANTEED, NOR IS THERE ANY GUARANTEE THAT ALL EXISTING UTILITIES (WHETHER FUNCTIONAL OR ABANDONED) WITHIN THE PROJECT AREA ARE SHOWN ON THESE DRAWINGS. THE CONTRACTOR SHALL DETERMINE THE EXACT LOCATION OF ALL UNDERGROUND UTILITIES BEFORE STARTING WORK. THE CONTRACTOR SHALL BE RESPONSIBLE FOR ALL DAMAGE RESULTING FROM CONTRACTORS WORK.

DATE	REV.
SURVEYED	9/25/16
ENGINEERED	NE
DRAWN	DD
CHECKED	DB
APPROVED	DD

NELSON ENGINEERING
P.O. BOX 1599, JACKSON WYOMING (307) 733-2087

DRAWING TITLE: PATHWAY ALIGNMENT PLAN & PROFILE STA. 16+20.00 - 21+80.00

JOB TITLE: SOUTH PARK LOOP CONNECTOR PATHWAY PROJECT TETON COUNTY, WY

DRAWING NO 3.3

JOB NO 15-257-02

S:\Proj\2015\257-02 (Design - South Park Loop Pathway Connector)\Drawings\Layout Drawings\PAP PATHWAY CL 4-6.DWG <STA 16+20.00 - 21+80.00> - Mar 25, 2016 @5:44:4 pm PLOTTED BY karchner DWG FORMAT: 151

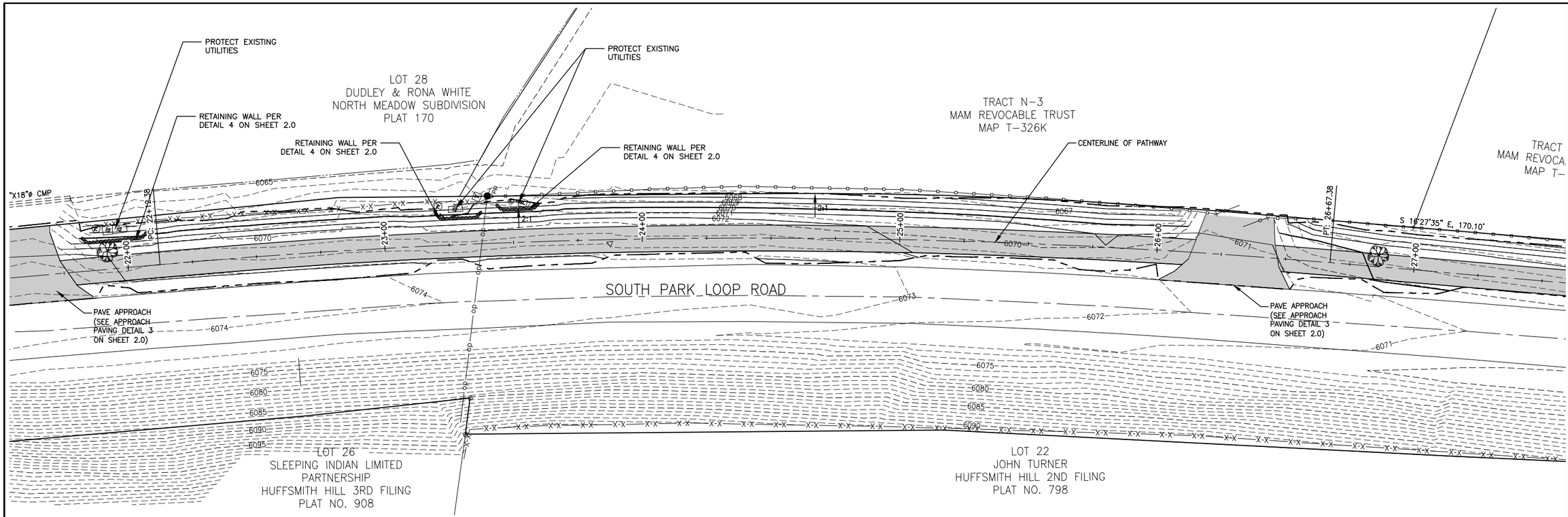

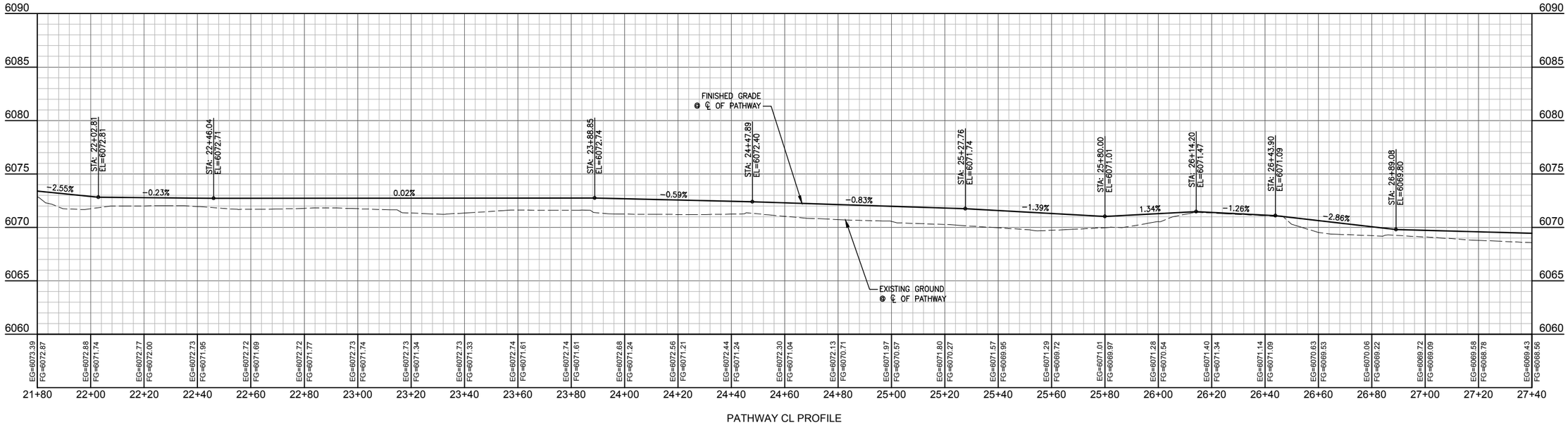

PATHWAY CL PROFILE

CONTRACTOR NOTE:

CAUTION: UNDERGROUND UTILITY LOCATIONS ARE NOT GUARANTEED, NOR IS THERE ANY GUARANTEE THAT ALL EXISTING UTILITIES (WHETHER FUNCTIONAL OR ABANDONED) WITHIN THE PROJECT AREA ARE SHOWN ON THESE DRAWINGS. THE CONTRACTOR SHALL DETERMINE THE EXACT LOCATION OF ALL UNDERGROUND UTILITIES BEFORE STARTING WORK. THE CONTRACTOR SHALL BE RESPONSIBLE FOR ALL DAMAGE RESULTING FROM CONTRACTORS WORK.

	REV.
3/25/16	
DATE	NE
SURVEYED	DD
ENGINEERED	DB
DRAWN	DD
CHECKED	DD
APPROVED	

NELSON ENGINEERING
P.O. BOX 1599, JACKSON WYOMING (307) 733-2087

DRAWING TITLE
PATHWAY ALIGNMENT
PLAN & PROFILE
STA. 21+80.00 - 27+40.00

JOB TITLE
SOUTH PARK LOOP
CONNECTOR PATHWAY PROJECT
TETON COUNTY, WY

DRAWING NO 3.4

JOB NO 15-257-02

S:\Proj\2015\257-02 Design - South Park Loop Pathway Connector\\Drawings\Layout Drawings\P&P PATHWAY CL 4-6.DWG, (STA 21+80.00 - 27+40.00) - Mar 25 2016 02:14:37 pm PLOTTED BY: laurichner DWG FORMAT: 191

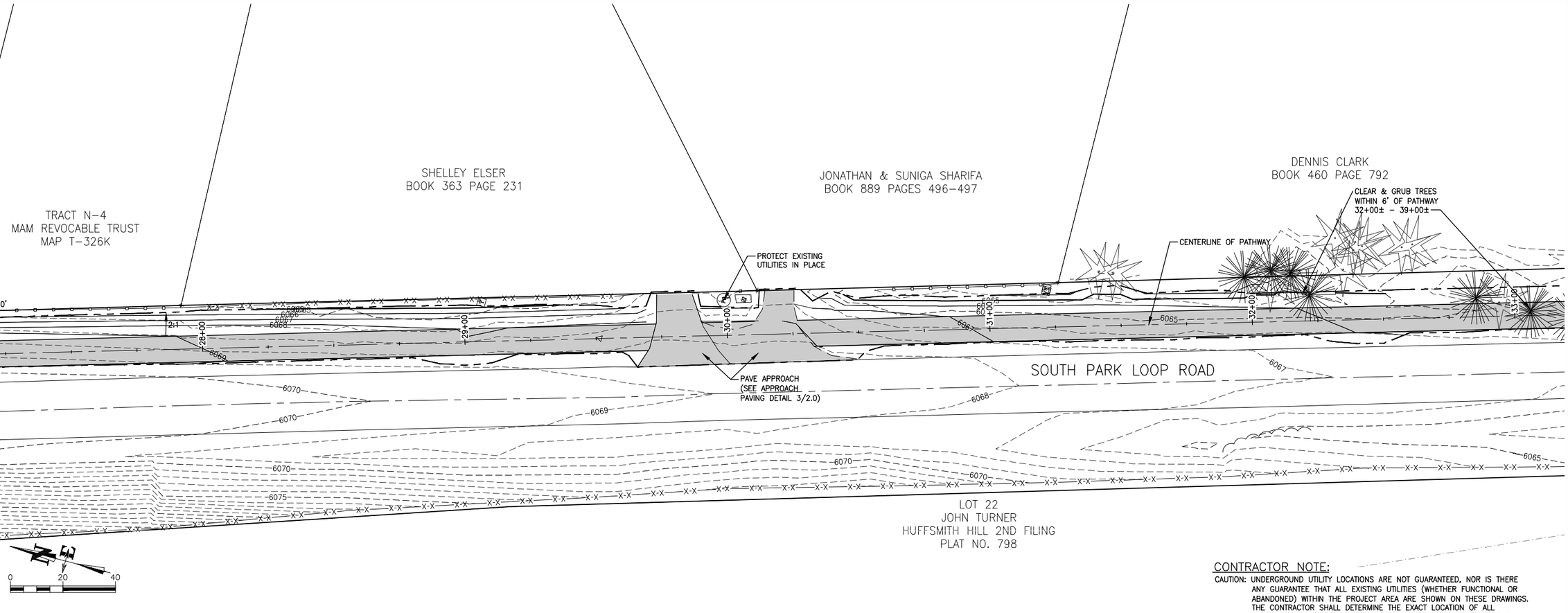

CONTRACTOR NOTE:

CAUTION: UNDERGROUND UTILITY LOCATIONS ARE NOT GUARANTEED, NOR IS THERE ANY GUARANTEE THAT ALL EXISTING UTILITIES (WHETHER FUNCTIONAL OR ABANDONED) WITHIN THE PROJECT AREA ARE SHOWN ON THESE DRAWINGS. THE CONTRACTOR SHALL DETERMINE THE EXACT LOCATION OF ALL UNDERGROUND UTILITIES BEFORE STARTING WORK. THE CONTRACTOR SHALL BE RESPONSIBLE FOR ALL DAMAGE RESULTING FROM CONTRACTORS WORK.

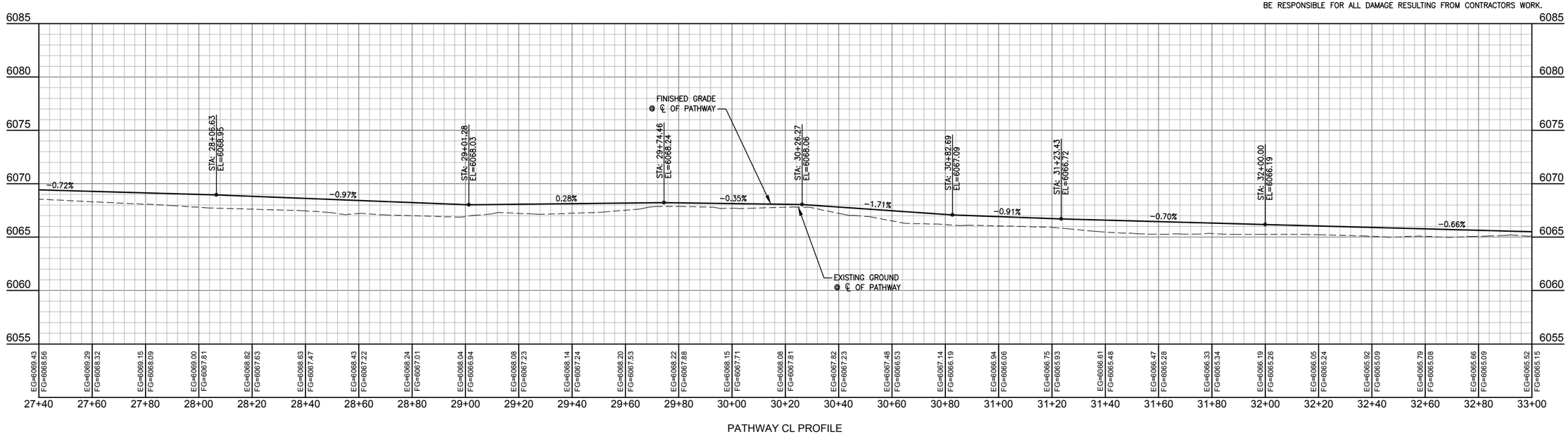

PATHWAY CL PROFILE

DATE	3/25/16	REV.
SURVEYED	NE	
ENGINEERED	DD	
DRAWN	DB	
CHECKED	DD	
APPROVED	DD	

NELSON ENGINEERING
P.O. BOX 1599, JACKSON WYOMING (307) 733-2087

DRAWING TITLE
PATHWAY ALIGNMENT
PLAN & PROFILE
STA. 27+40.00 - 33+00.00

JOB TITLE
SOUTH PARK LOOP
CONNECTOR PATHWAY PROJECT
TETON COUNTY, WY

DRAWING NO 3.5

JOB NO 15-257-02

S:\Proj2015\257-02 CDesign - South Park Loop Pathway Connector\Drawings\Layout Drawings\P&P PATHWAY CL 4-6.DWG (STA 27+40.00 - 33+00.00) - Mar 25 2016 05:15:00 pm PLOTTED BY: karichner DWG FORMAT: 191

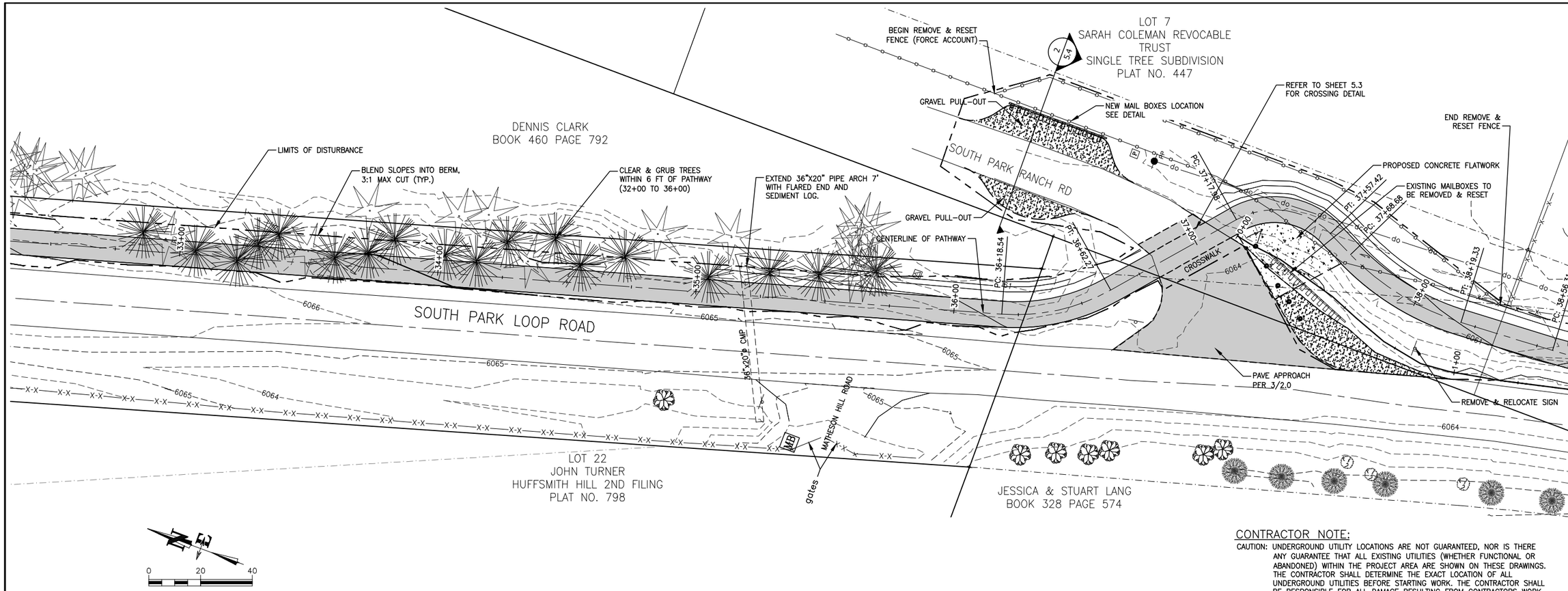

CONTRACTOR NOTE:

CAUTION: UNDERGROUND UTILITY LOCATIONS ARE NOT GUARANTEED, NOR IS THERE ANY GUARANTEE THAT ALL EXISTING UTILITIES (WHETHER FUNCTIONAL OR ABANDONED) WITHIN THE PROJECT AREA ARE SHOWN ON THESE DRAWINGS. THE CONTRACTOR SHALL DETERMINE THE EXACT LOCATION OF ALL UNDERGROUND UTILITIES BEFORE STARTING WORK. THE CONTRACTOR SHALL BE RESPONSIBLE FOR ALL DAMAGE RESULTING FROM CONTRACTORS WORK.

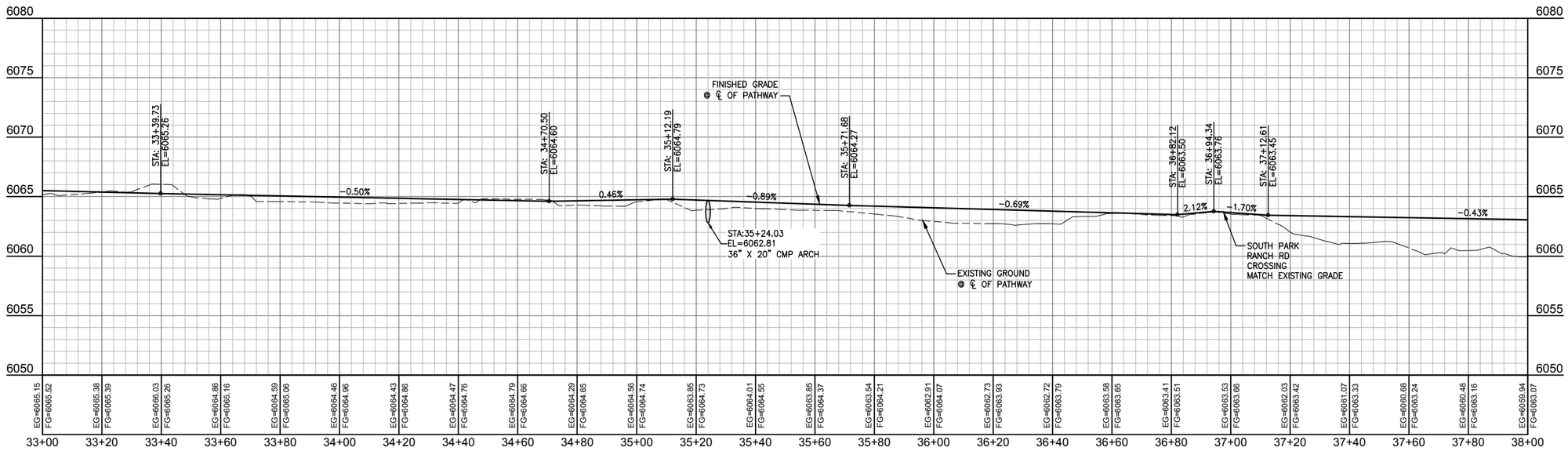

REV.	DATE	3/25/16
	SURVEYED	NE
	ENGINEERED	DD
	DRAWN	DB
	CHECKED	DD
	APPROVED	DD

NELSON ENGINEERING
P.O. BOX 1599, JACKSON WYOMING (307) 733-2087

DRAWING TITLE
PATHWAY ALIGNMENT
PLAN & PROFILE
STA. 33+00.00 - 38+00.00

JOB TITLE
SOUTH PARK LOOP
CONNECTOR PATHWAY PROJECT
TETON COUNTY, WY

DRAWING NO 3.6

JOB NO 15-257-02

S:\Proj2015\257-02 (Design - South Park Loop Pathway Connector)\Drawings\Layout Drawings\P&P PATHWAY CL 7-9.dwg (STA 33+00.00 - 38+00.00) - Mar 25 2016 05:16:04 pm PLOTTED BY: kerichner DWG FORMAT: 19.1

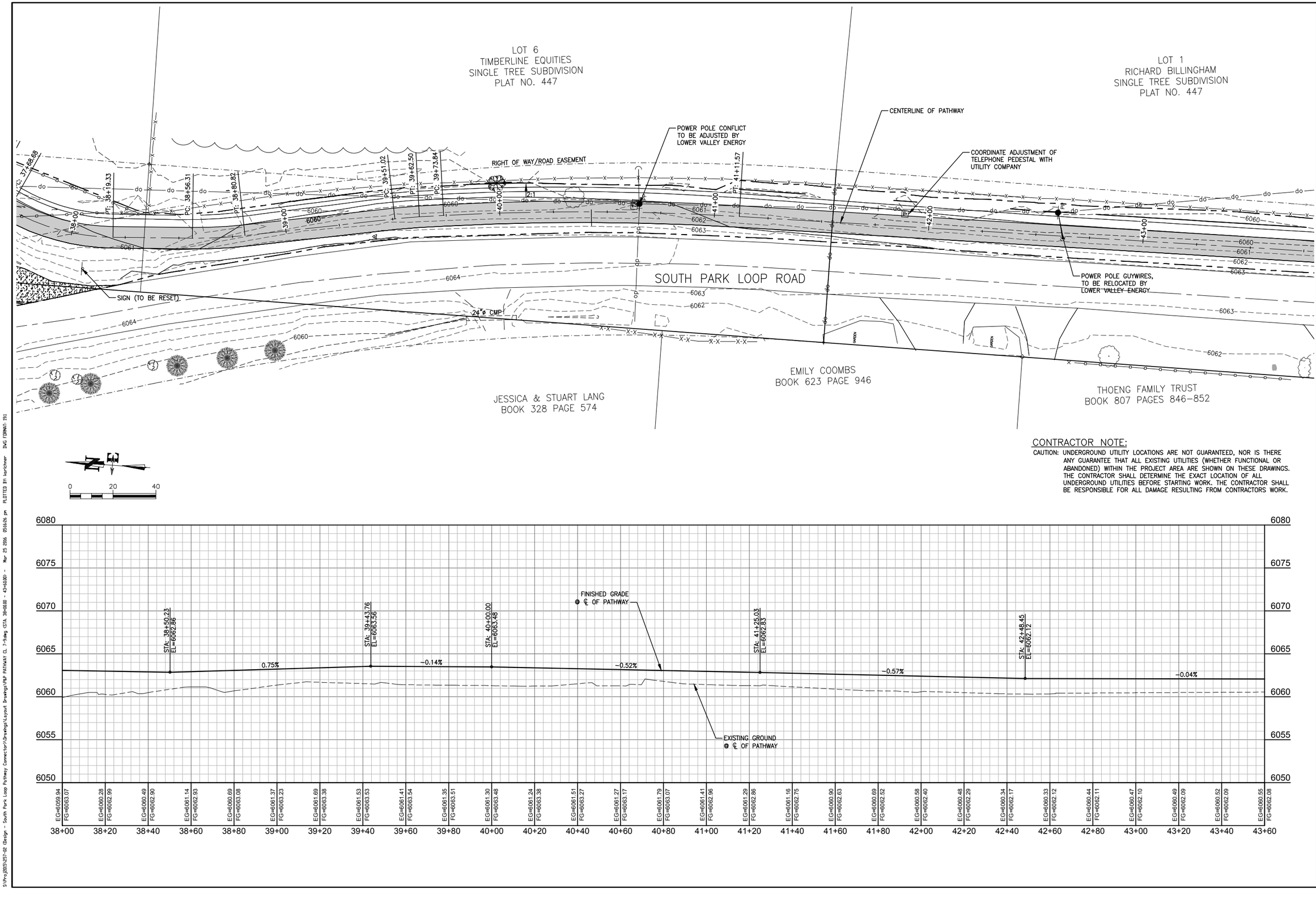

CONTRACTOR NOTE:

CAUTION: UNDERGROUND UTILITY LOCATIONS ARE NOT GUARANTEED, NOR IS THERE ANY GUARANTEE THAT ALL EXISTING UTILITIES (WHETHER FUNCTIONAL OR ABANDONED) WITHIN THE PROJECT AREA ARE SHOWN ON THESE DRAWINGS. THE CONTRACTOR SHALL DETERMINE THE EXACT LOCATION OF ALL UNDERGROUND UTILITIES BEFORE STARTING WORK. THE CONTRACTOR SHALL BE RESPONSIBLE FOR ALL DAMAGE RESULTING FROM CONTRACTORS WORK.

	EG	FG
38+00	6059.94	6063.07
38+20	6060.28	6062.99
38+40	6060.49	6062.90
38+60	6061.14	6062.93
38+80	6060.69	6063.08
39+00	6061.37	6063.23
39+20	6061.69	6063.38
39+40	6061.53	6063.53
39+60	6061.41	6063.54
39+80	6061.35	6063.51
40+00	6061.30	6063.48
40+20	6061.24	6063.38
40+40	6061.51	6063.27
40+60	6061.27	6063.17
40+80	6061.79	6063.07
41+00	6061.41	6062.96
41+20	6061.29	6062.86
41+40	6061.16	6062.75
41+60	6060.90	6062.63
41+80	6060.69	6062.52
42+00	6060.58	6062.40
42+20	6060.48	6062.29
42+40	6060.34	6062.17
42+60	6060.33	6062.12
42+80	6060.44	6062.11
43+00	6060.47	6062.10
43+20	6060.49	6062.09
43+40	6060.52	6062.09
43+60	6060.55	6062.08

DATE	3/25/16	REV.
SURVEYED	NE	
ENGINEERED	DD	
DRAWN	DB	
CHECKED	DD	
APPROVED	DD	

NELSON ENGINEERING
P.O. BOX 1599, JACKSON WYOMING (307) 733-2087

DRAWING TITLE
PATHWAY ALIGNMENT
PLAN & PROFILE
STA. 38+00.00 - 43+60.00

JOB TITLE
SOUTH PARK LOOP
CONNECTOR PATHWAY PROJECT
TETON COUNTY, WY

DRAWING NO 3.7

JOB NO 15-257-02

S:\Proj\2015\257-02 Design - South Park Loop Pathway Connector\Drawings\Layout Drawings\PKP PATHWAY CL 7-9.dwg STA 38+00.00 - 43+60.00 - Mar 25 2016 05:16:26 pm PLOTTED BY korichner DWG FORMAT 19.1

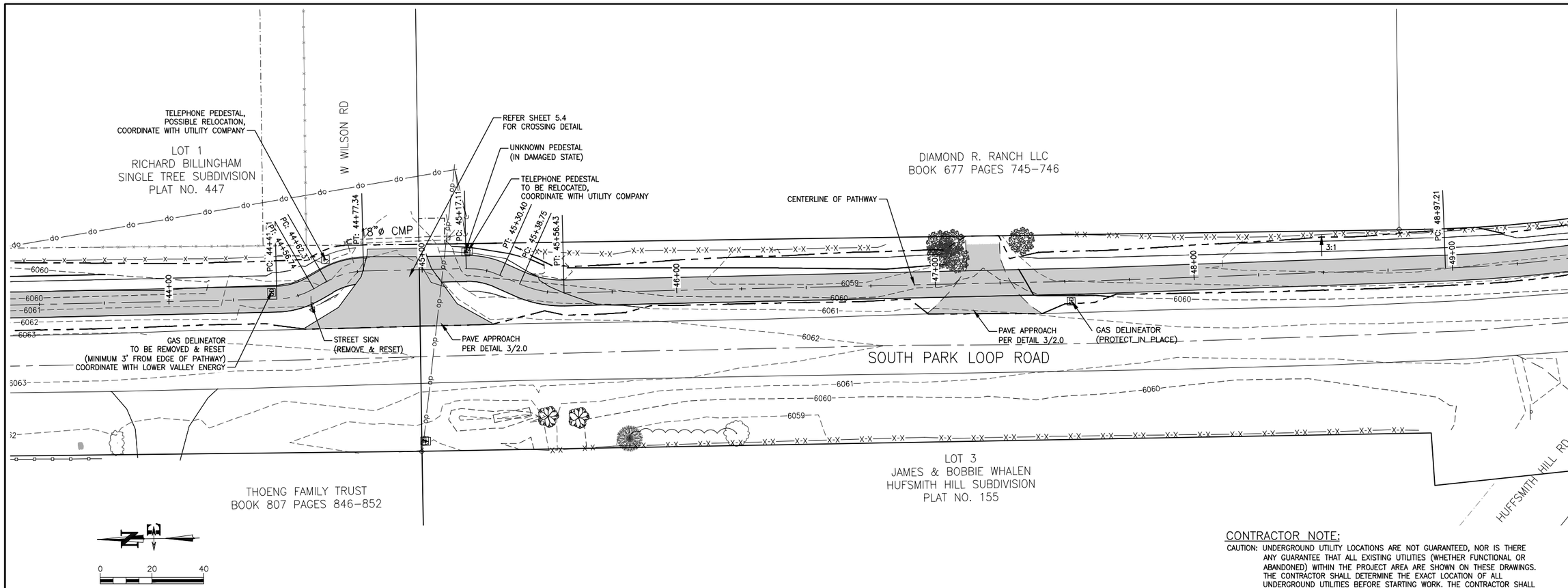

CONTRACTOR NOTE:

CAUTION: UNDERGROUND UTILITY LOCATIONS ARE NOT GUARANTEED, NOR IS THERE ANY GUARANTEE THAT ALL EXISTING UTILITIES (WHETHER FUNCTIONAL OR ABANDONED) WITHIN THE PROJECT AREA ARE SHOWN ON THESE DRAWINGS. THE CONTRACTOR SHALL DETERMINE THE EXACT LOCATION OF ALL UNDERGROUND UTILITIES BEFORE STARTING WORK. THE CONTRACTOR SHALL BE RESPONSIBLE FOR ALL DAMAGE RESULTING FROM CONTRACTORS WORK.

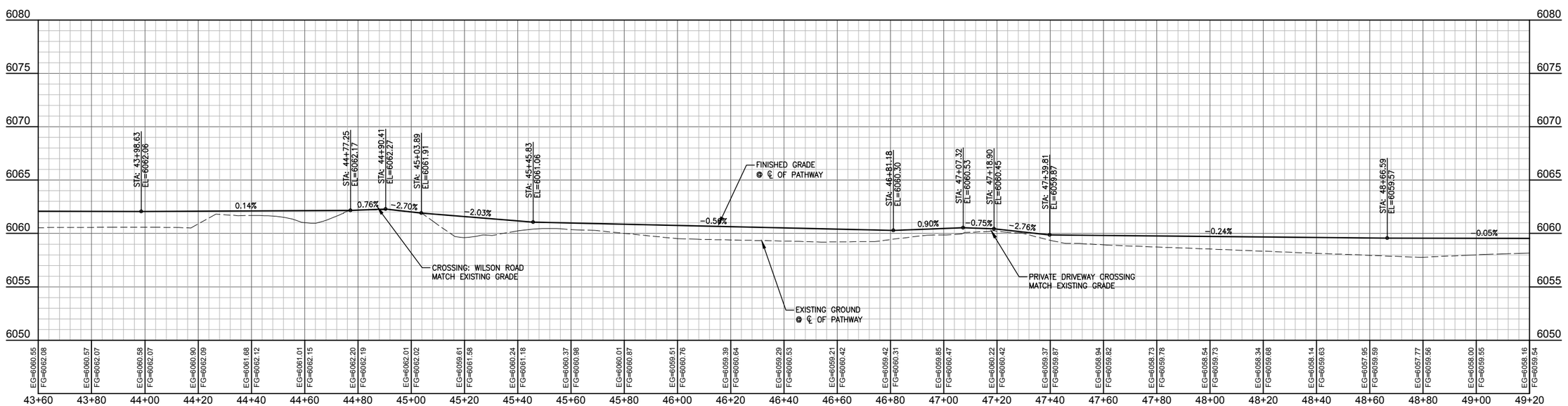

DATE	3/25/16	REV.
SURVEYED	NE	
ENGINEERED	DD	
DRAWN	DB	
CHECKED	DD	
APPROVED	DD	

NELSON ENGINEERING
P.O. BOX 1599, JACKSON WYOMING (307) 733-2087

DRAWING TITLE
PATHWAY ALIGNMENT
PLAN & PROFILE
STA. 43+60.00 - 49+20.00

JOB TITLE
SOUTH PARK LOOP
CONNECTOR PATHWAY PROJECT
TETON COUNTY, WY

DRAWING NO 3.8

JOB NO 15-257-02

S:\Proj2015\257-02 (Design - South Park Loop Pathway Connector)\Drawings\Layout Drawings\P&P PATHWAY CL 7-9.dwg (STA. 43+60.00 - 49+20.00) - Mar 25 2016 05:16:50 pm PLOTTED BY: karichner DWG FORMAT: 191

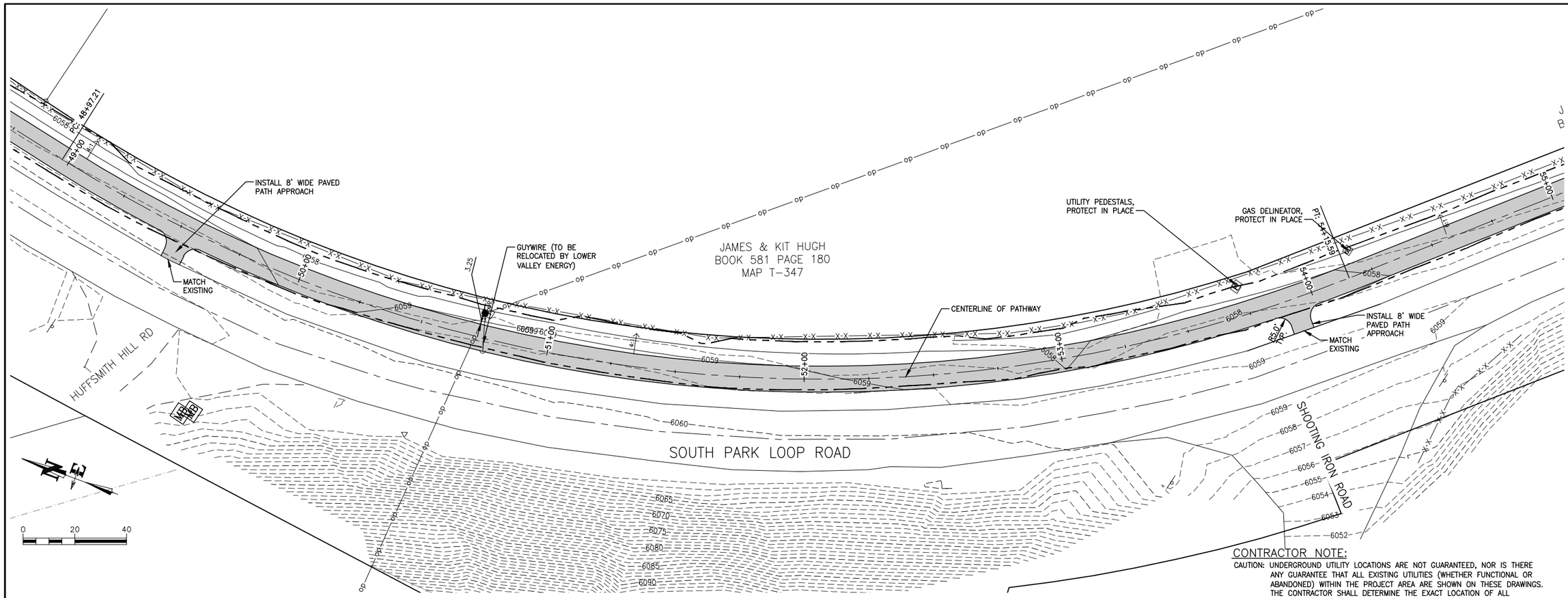

CONTRACTOR NOTE:

CAUTION: UNDERGROUND UTILITY LOCATIONS ARE NOT GUARANTEED, NOR IS THERE ANY GUARANTEE THAT ALL EXISTING UTILITIES (WHETHER FUNCTIONAL OR ABANDONED) WITHIN THE PROJECT AREA ARE SHOWN ON THESE DRAWINGS. THE CONTRACTOR SHALL DETERMINE THE EXACT LOCATION OF ALL UNDERGROUND UTILITIES BEFORE STARTING WORK. THE CONTRACTOR SHALL BE RESPONSIBLE FOR ALL DAMAGE RESULTING FROM CONTRACTORS WORK.

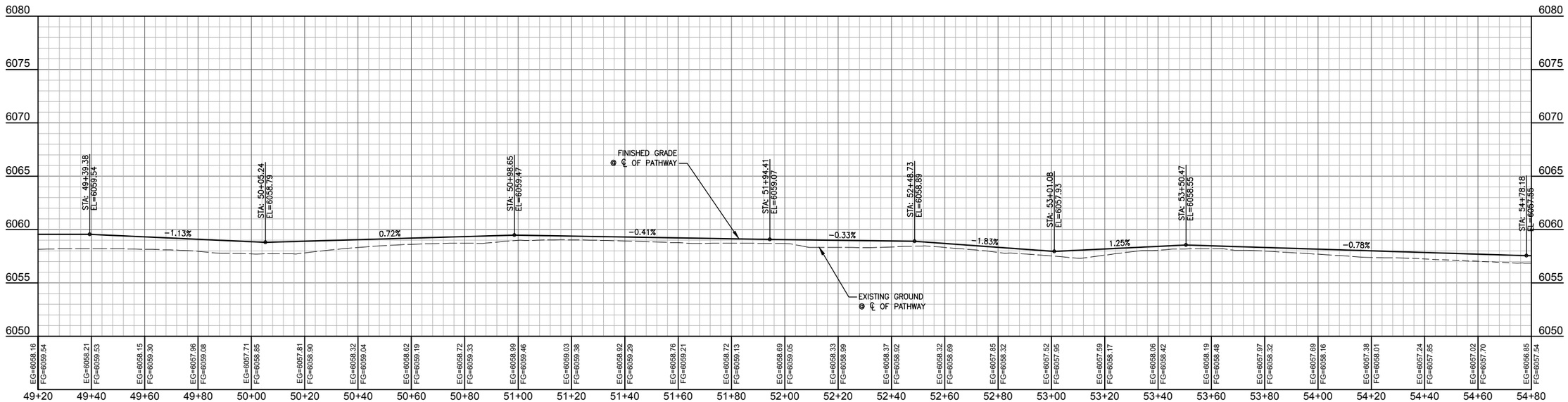

DATE	3/25/16	REV.
SURVEYED	NE	
ENGINEERED	DD	
DRAWN	DB	
CHECKED	DD	
APPROVED	DD	

NELSON ENGINEERING
P.O. BOX 1599, JACKSON WYOMING (307) 733-2087

DRAWING TITLE
PATHWAY ALIGNMENT
PLAN & PROFILE
STA. 49+20.00 - 54+80.00

JOB TITLE
SOUTH PARK LOOP
CONNECTOR PATHWAY PROJECT
TETON COUNTY, WY

DRAWING NO 3.9

JOB NO 15-257-02

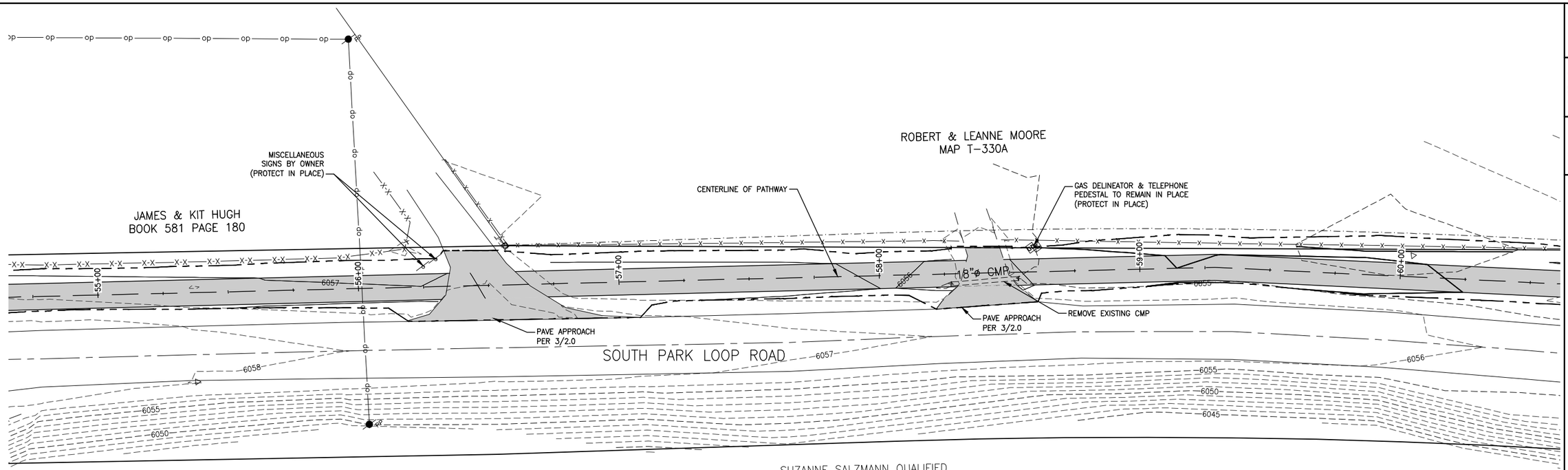

CONTRACTOR NOTE:

CAUTION: UNDERGROUND UTILITY LOCATIONS ARE NOT GUARANTEED, NOR IS THERE ANY GUARANTEE THAT ALL EXISTING UTILITIES (WHETHER FUNCTIONAL OR ABANDONED) WITHIN THE PROJECT AREA ARE SHOWN ON THESE DRAWINGS. THE CONTRACTOR SHALL DETERMINE THE EXACT LOCATION OF ALL UNDERGROUND UTILITIES BEFORE STARTING WORK. THE CONTRACTOR SHALL BE RESPONSIBLE FOR ALL DAMAGE RESULTING FROM CONTRACTORS WORK.

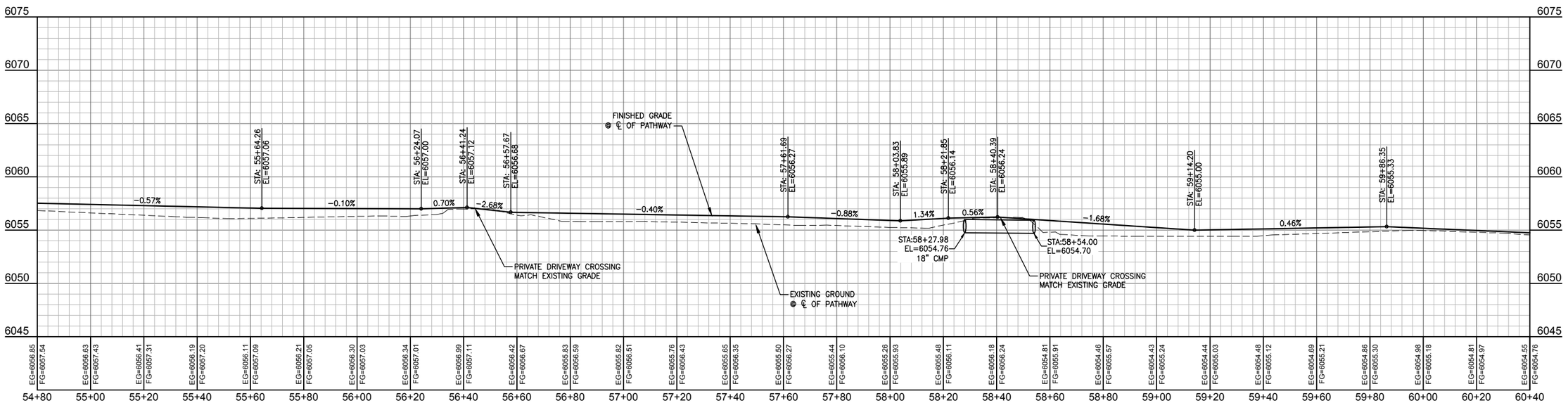

DATE	3/25/16	REV.
SURVEYED	NE	
ENGINEERED	DD	
DRAWN	DB	
CHECKED	DD	
APPROVED	DD	

NELSON ENGINEERING
P.O. BOX 1599, JACKSON WYOMING (307) 733-2087

DRAWING TITLE
PATHWAY ALIGNMENT
PLAN & PROFILE
STA. 54+80.00 - 60+40.00

JOB TITLE
SOUTH PARK LOOP
CONNECTOR PATHWAY PROJECT
TETON COUNTY, WY

DRAWING NO 3.10

JOB NO 15-257-02

S:\Proj\2015\257-02 (Design - South Park Loop Pathway Connector)\Drawings\Layout Drawings\PWP PATHWAY CL 10-12.dwg STA 54+80.00 - 60+40.00 - Mar 25 2016 05:18:21 pm PLOTTED BY karchner DWG FORMAT: 151

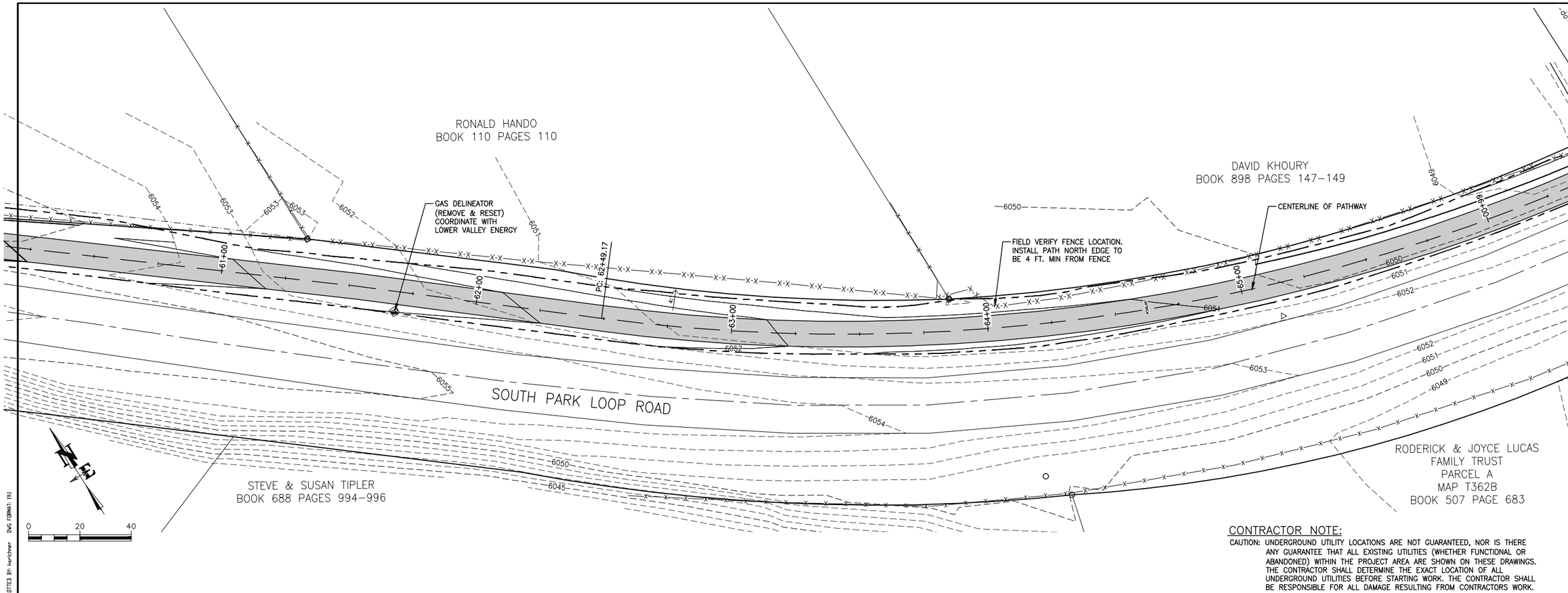

CONTRACTOR NOTE:

CAUTION: UNDERGROUND UTILITY LOCATIONS ARE NOT GUARANTEED, NOR IS THERE ANY GUARANTEE THAT ALL EXISTING UTILITIES (WHETHER FUNCTIONAL OR ABANDONED) WITHIN THE PROJECT AREA ARE SHOWN ON THESE DRAWINGS. THE CONTRACTOR SHALL DETERMINE THE EXACT LOCATION OF ALL UNDERGROUND UTILITIES BEFORE STARTING WORK. THE CONTRACTOR SHALL BE RESPONSIBLE FOR ALL DAMAGE RESULTING FROM CONTRACTORS WORK.

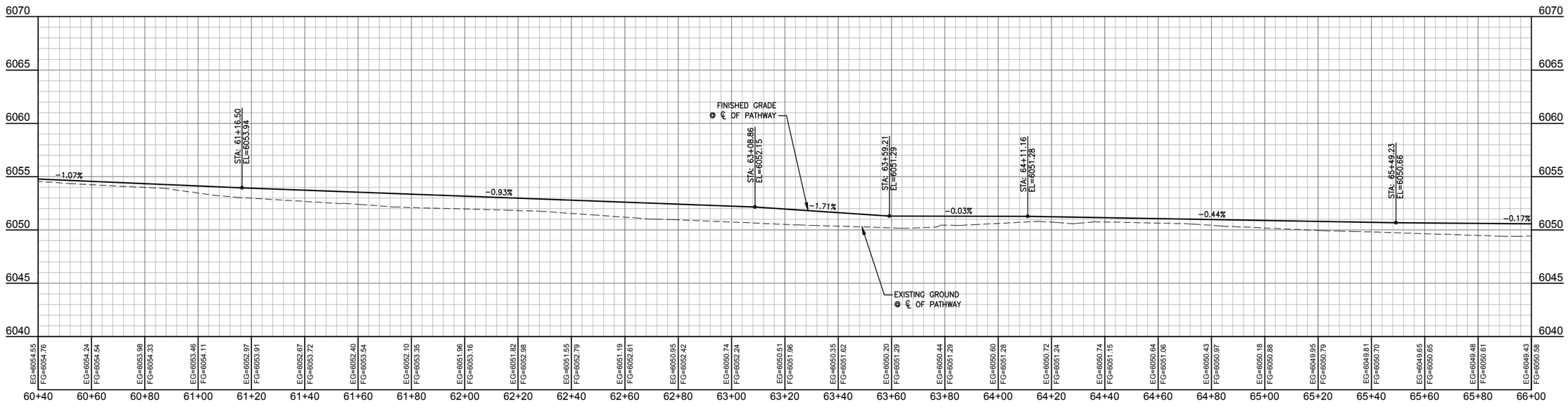

REV.	DATE	SURVEYED	ENGINEERED	DRAWN	CHECKED	APPROVED
	3/25/16	NE	DD	DB	DD	DD

NELSON ENGINEERING
P.O. BOX 1599, JACKSON WYOMING (307) 733-2087

DRAWING TITLE
PATHWAY ALIGNMENT
PLAN & PROFILE
STA. 60+40.00 - 66+00.00

JOB TITLE
SOUTH PARK LOOP
CONNECTOR PATHWAY PROJECT
TETON COUNTY, WY

DRAWING NO 3.11

JOB NO 15-257-02

S:\Proj2015\257-02 (Design - South Park Loop Pathway Connector)\Drawings\Layout Drawings\P&P PATHWAY CL 10-12.dwg (STA 60+40.00 - 66+00.00) - Mar 25 2016 0:58:45 pm PLOTTED BY: karichner DWG FORMAT: 191

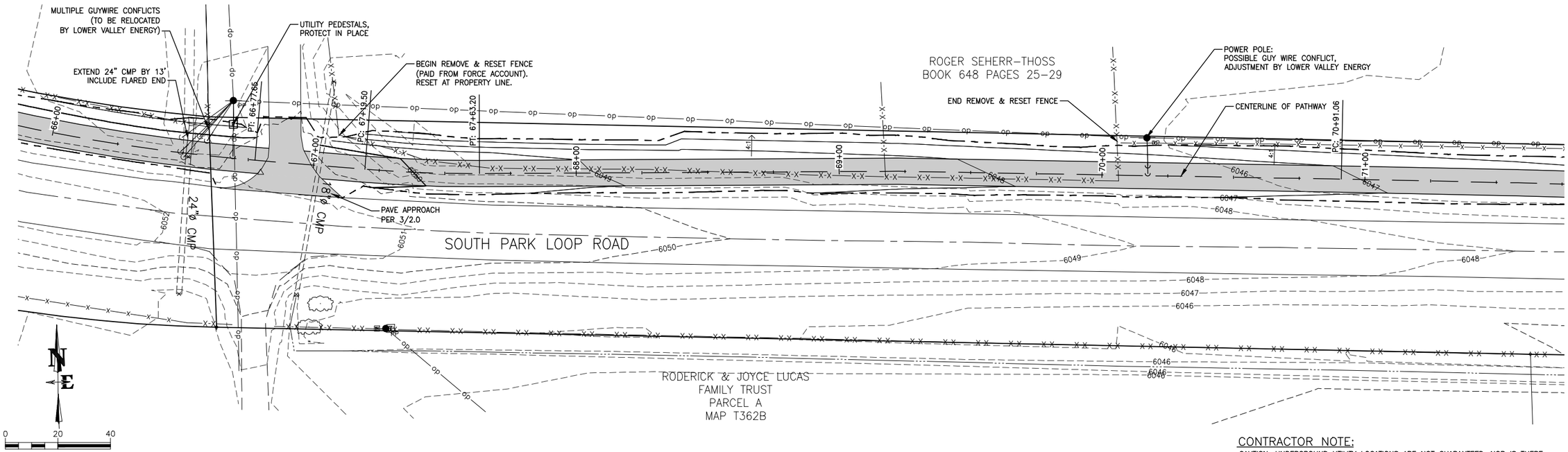

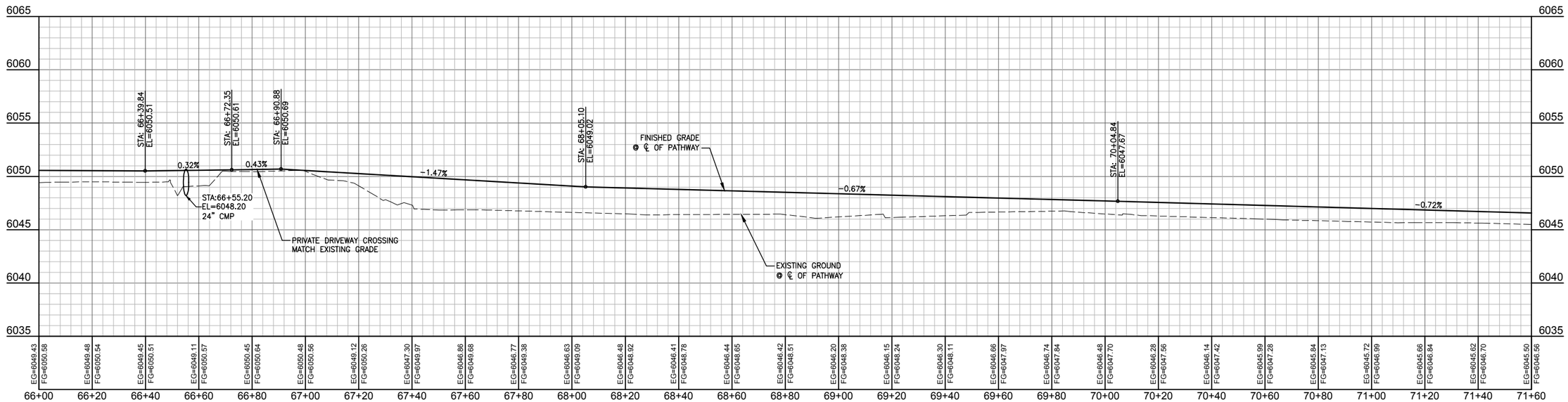

CONTRACTOR NOTE:

CAUTION: UNDERGROUND UTILITY LOCATIONS ARE NOT GUARANTEED, NOR IS THERE ANY GUARANTEE THAT ALL EXISTING UTILITIES (WHETHER FUNCTIONAL OR ABANDONED) WITHIN THE PROJECT AREA ARE SHOWN ON THESE DRAWINGS. THE CONTRACTOR SHALL DETERMINE THE EXACT LOCATION OF ALL UNDERGROUND UTILITIES BEFORE STARTING WORK. THE CONTRACTOR SHALL BE RESPONSIBLE FOR ALL DAMAGE RESULTING FROM CONTRACTORS WORK.

DATE	3/25/16	REV.
SURVEYED	NE	
ENGINEERED	DD	
DRAWN	DB	
CHECKED	DD	
APPROVED	DD	

NELSON ENGINEERING
P.O. BOX 1599, JACKSON WYOMING (307) 733-2087

DRAWING TITLE
PATHWAY ALIGNMENT
PLAN & PROFILE
STA. 66+00.00 - 71+60.00

JOB TITLE
SOUTH PARK LOOP
CONNECTOR PATHWAY PROJECT
TETON COUNTY, WY

DRAWING NO 3.12

JOB NO 15-257-02

S:\Proj\2015\257-02 (Design - South Park Loop Pathway Connector)\Drawings\Layout Drawings\PAP PATHWAY CL 13-15.dwg STA 66+00.00 - 71+60.00 - Mar 25 2016 05:49:53 pm PLOTTED BY: kurichner DWG FORMAT: 191

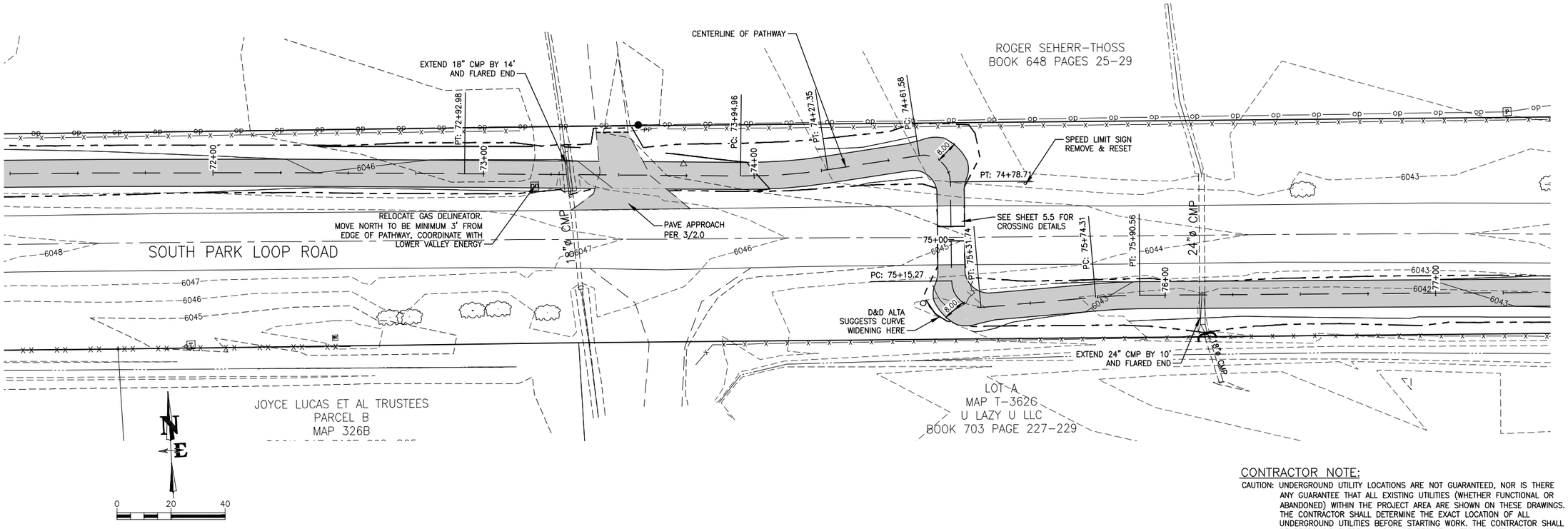

CONTRACTOR NOTE:

CAUTION: UNDERGROUND UTILITY LOCATIONS ARE NOT GUARANTEED, NOR IS THERE ANY GUARANTEE THAT ALL EXISTING UTILITIES (WHETHER FUNCTIONAL OR ABANDONED) WITHIN THE PROJECT AREA ARE SHOWN ON THESE DRAWINGS. THE CONTRACTOR SHALL DETERMINE THE EXACT LOCATION OF ALL UNDERGROUND UTILITIES BEFORE STARTING WORK. THE CONTRACTOR SHALL BE RESPONSIBLE FOR ALL DAMAGE RESULTING FROM CONTRACTORS WORK.

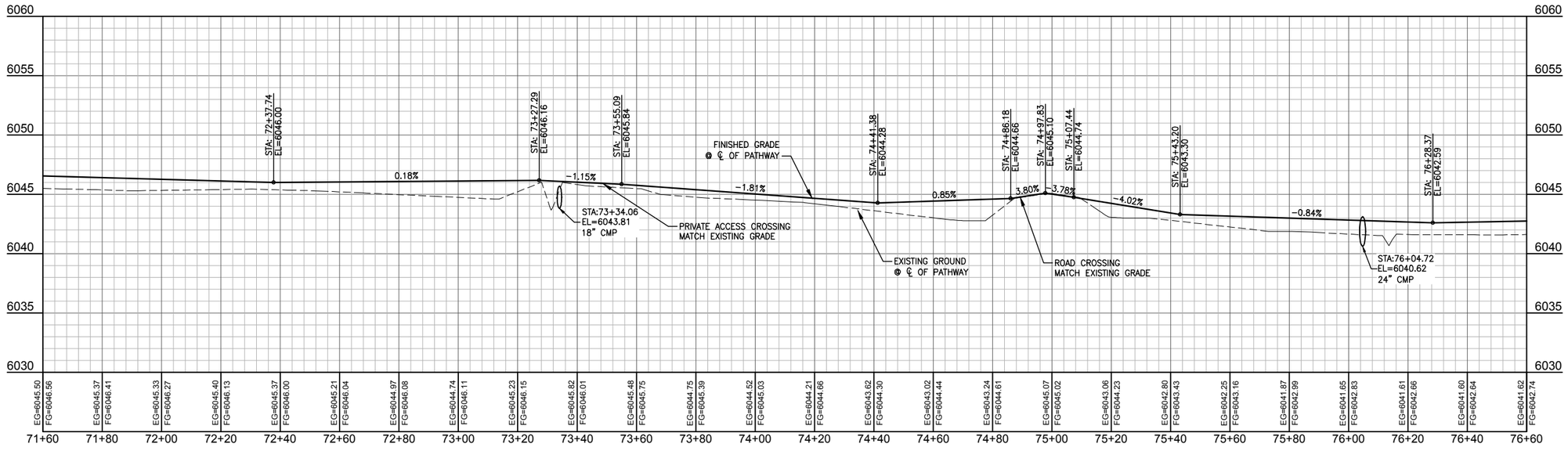

DATE	3/25/16
SURVEYED	NE
ENGINEERED	DD
DRAWN	DB
CHECKED	DD
APPROVED	DD

REV.

NELSON ENGINEERING
P.O. BOX 1599, JACKSON WYOMING (307) 733-2087

DRAWING TITLE
PATHWAY ALIGNMENT
PLAN & PROFILE
STA. 71+60.00 - 76+60.00

JOB TITLE
SOUTH PARK LOOP
CONNECTOR PATHWAY PROJECT
TETON COUNTY, WY

DRAWING NO 3.13

JOB NO 15-257-02

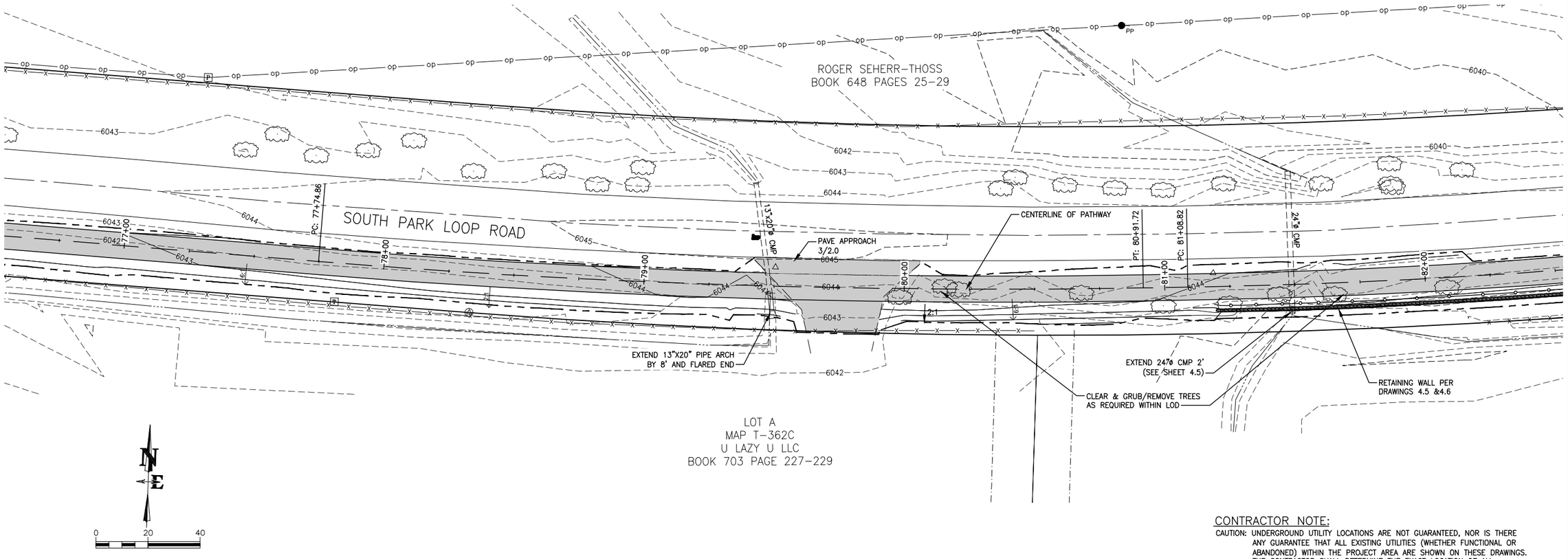

CONTRACTOR NOTE:

CAUTION: UNDERGROUND UTILITY LOCATIONS ARE NOT GUARANTEED, NOR IS THERE ANY GUARANTEE THAT ALL EXISTING UTILITIES (WHETHER FUNCTIONAL OR ABANDONED) WITHIN THE PROJECT AREA ARE SHOWN ON THESE DRAWINGS. THE CONTRACTOR SHALL DETERMINE THE EXACT LOCATION OF ALL UNDERGROUND UTILITIES BEFORE STARTING WORK. THE CONTRACTOR SHALL BE RESPONSIBLE FOR ALL DAMAGE RESULTING FROM CONTRACTORS WORK.

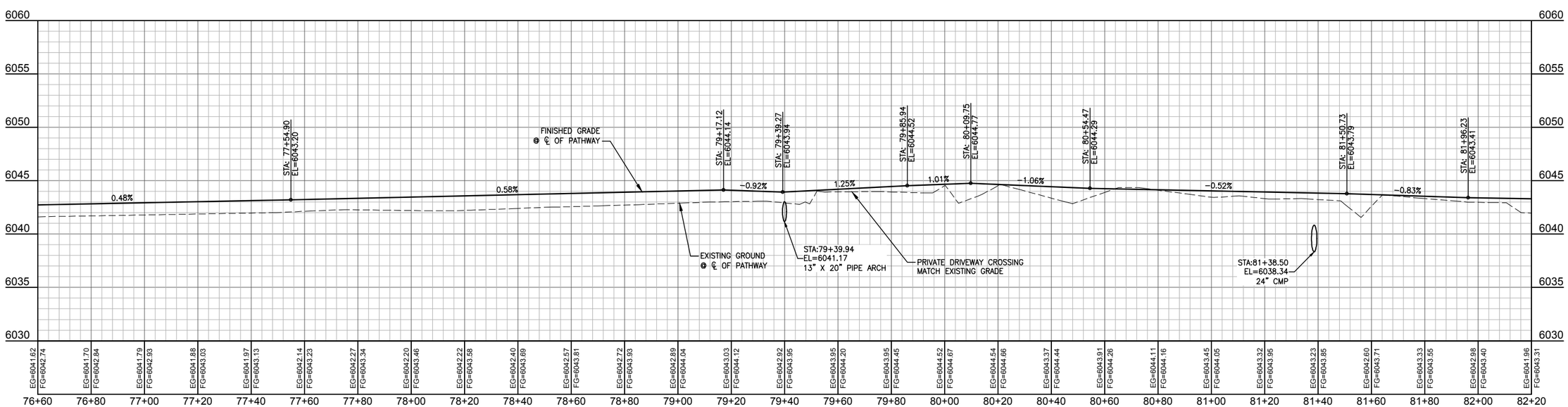

DATE	3/25/16
SURVEYED	NE
ENGINEERED	DD
DRAWN	DB
CHECKED	DD
APPROVED	DD

REV.

NELSON ENGINEERING
P.O. BOX 1599, JACKSON WYOMING (307) 733-2087

DRAWING TITLE
PATHWAY ALIGNMENT
PLAN & PROFILE
STA. 76+60.00 - 82+20.00

JOB TITLE
SOUTH PARK LOOP
CONNECTOR PATHWAY PROJECT
TETON COUNTY, WY

DRAWING NO 3.14

JOB NO 15-257-02

S:\Proj2015\257-02 (Design - South Park Loop Pathway Connector)\Drawings\Layout Drawings\P&P PATHWAY CL 13-15.dwg (STA 76+60.00 - 82+20.00) - Mar 25 2016 05:20:41 pm PLOTTED BY: kurichner DWG FORMAT: 191

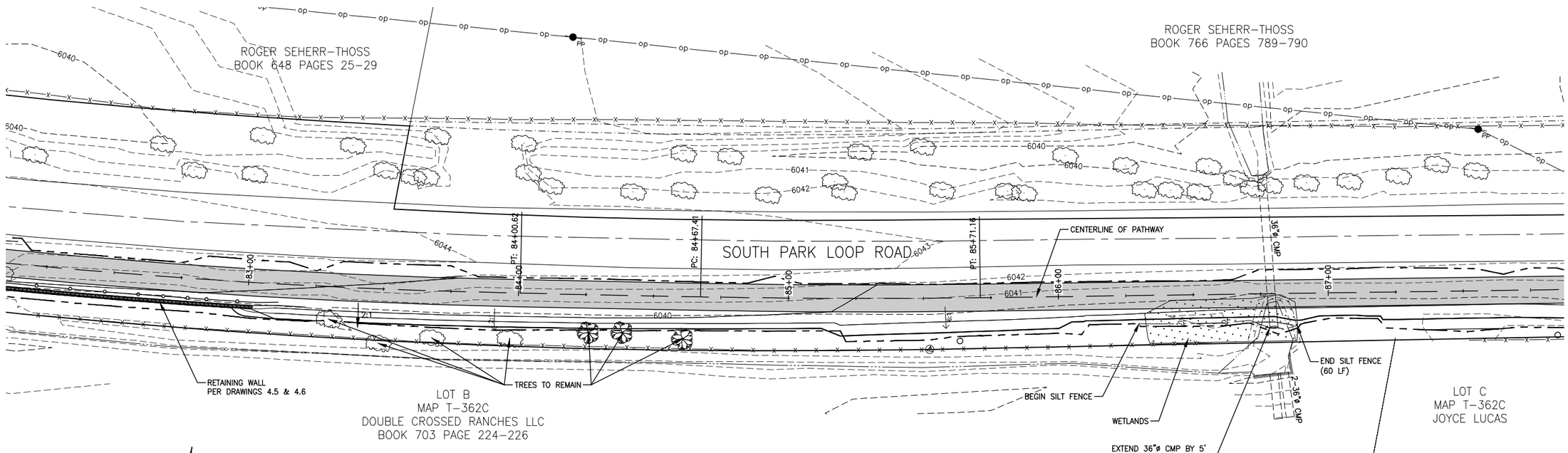

CONTRACTOR NOTE:

CAUTION: UNDERGROUND UTILITY LOCATIONS ARE NOT GUARANTEED, NOR IS THERE ANY GUARANTEE THAT ALL EXISTING UTILITIES (WHETHER FUNCTIONAL OR ABANDONED) WITHIN THE PROJECT AREA ARE SHOWN ON THESE DRAWINGS. THE CONTRACTOR SHALL DETERMINE THE EXACT LOCATION OF ALL UNDERGROUND UTILITIES BEFORE STARTING WORK. THE CONTRACTOR SHALL BE RESPONSIBLE FOR ALL DAMAGE RESULTING FROM CONTRACTORS WORK.

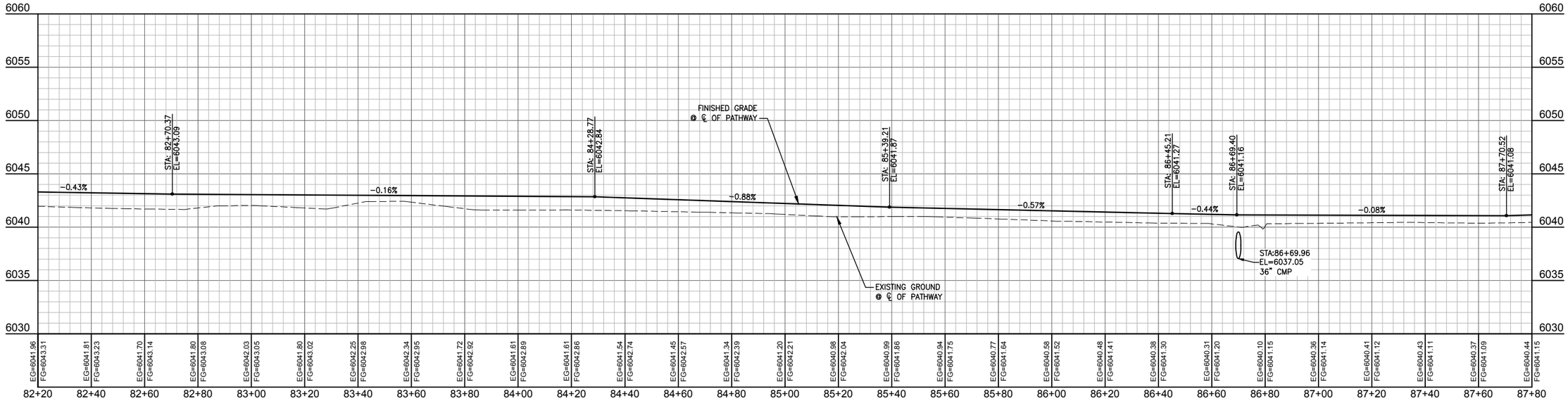

DATE	3/25/16	REV.
SURVEYED	NE	
ENGINEERED	DD	
DRAWN	DB	
CHECKED	DD	
APPROVED	DD	

NELSON ENGINEERING
P.O. BOX 1599, JACKSON WYOMING (307) 733-2087

DRAWING TITLE
PATHWAY ALIGNMENT
PLAN & PROFILE
STA. 82+20.00 - 87+80.00

JOB TITLE
SOUTH PARK LOOP
CONNECTOR PATHWAY PROJECT
TETON COUNTY, WY

DRAWING NO 3.15

JOB NO 15-257-02

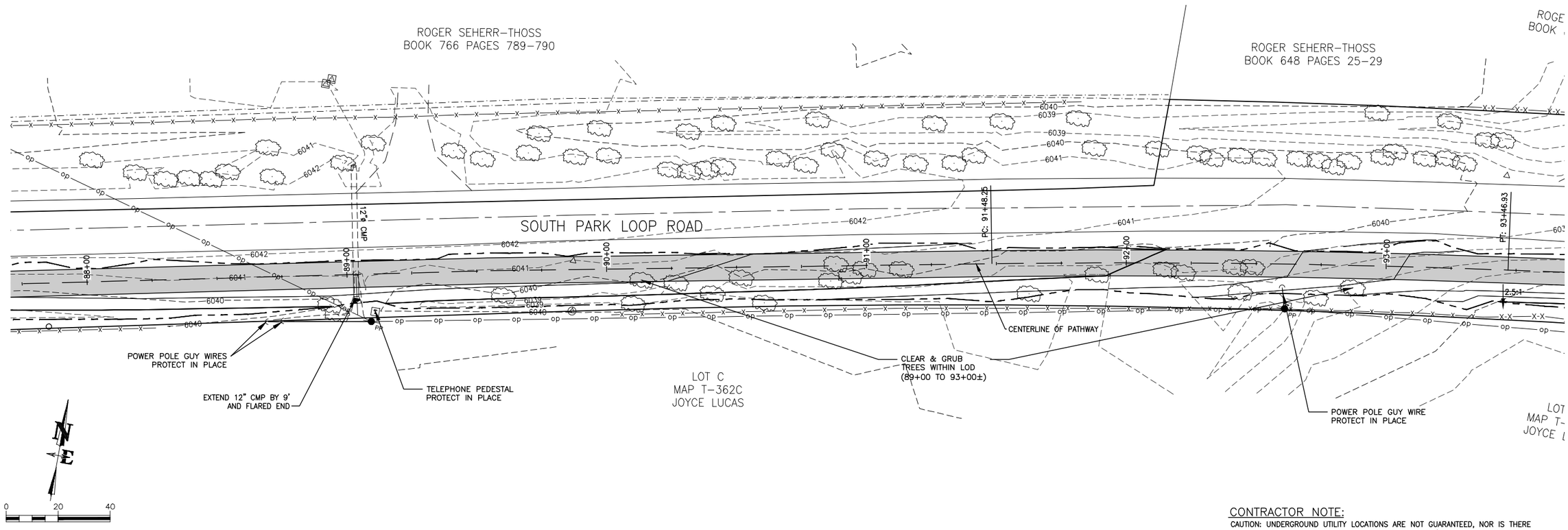

CONTRACTOR NOTE:

CAUTION: UNDERGROUND UTILITY LOCATIONS ARE NOT GUARANTEED, NOR IS THERE ANY GUARANTEE THAT ALL EXISTING UTILITIES (WHETHER FUNCTIONAL OR ABANDONED) WITHIN THE PROJECT AREA ARE SHOWN ON THESE DRAWINGS. THE CONTRACTOR SHALL DETERMINE THE EXACT LOCATION OF ALL UNDERGROUND UTILITIES BEFORE STARTING WORK. THE CONTRACTOR SHALL BE RESPONSIBLE FOR ALL DAMAGE RESULTING FROM CONTRACTORS WORK.

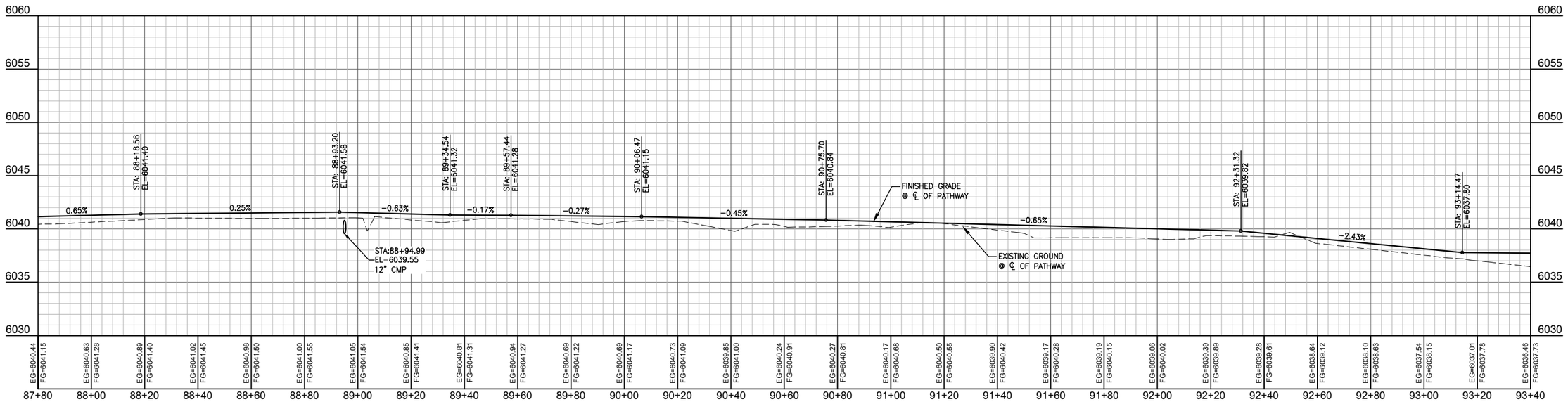

DATE	3/25/16	REV.
SURVEYED	NE	
ENGINEERED	DD	
DRAWN	DB	
CHECKED	DD	
APPROVED	DD	

NELSON ENGINEERING
P.O. BOX 1599, JACKSON WYOMING (307) 733-2087

DRAWING TITLE
PATHWAY ALIGNMENT
PLAN & PROFILE
STA. 87+80.00 - 93+40.00

JOB TITLE
SOUTH PARK LOOP
CONNECTOR PATHWAY PROJECT
TETON COUNTY, WY

DRAWING NO 3.16

JOB NO 15-257-02

S:\Proj2015\257-02 (Design - South Park Loop Pathway Connector)\Drawings\Layout Drawings\P&P PATHWAY CL 15-18.dwg C3.16 STA 87+80.00 - 93+40.00 - Mar 25 2016 05:22:05 pm PLOTTED BY: kerichner DWG FORMAT: 19.1

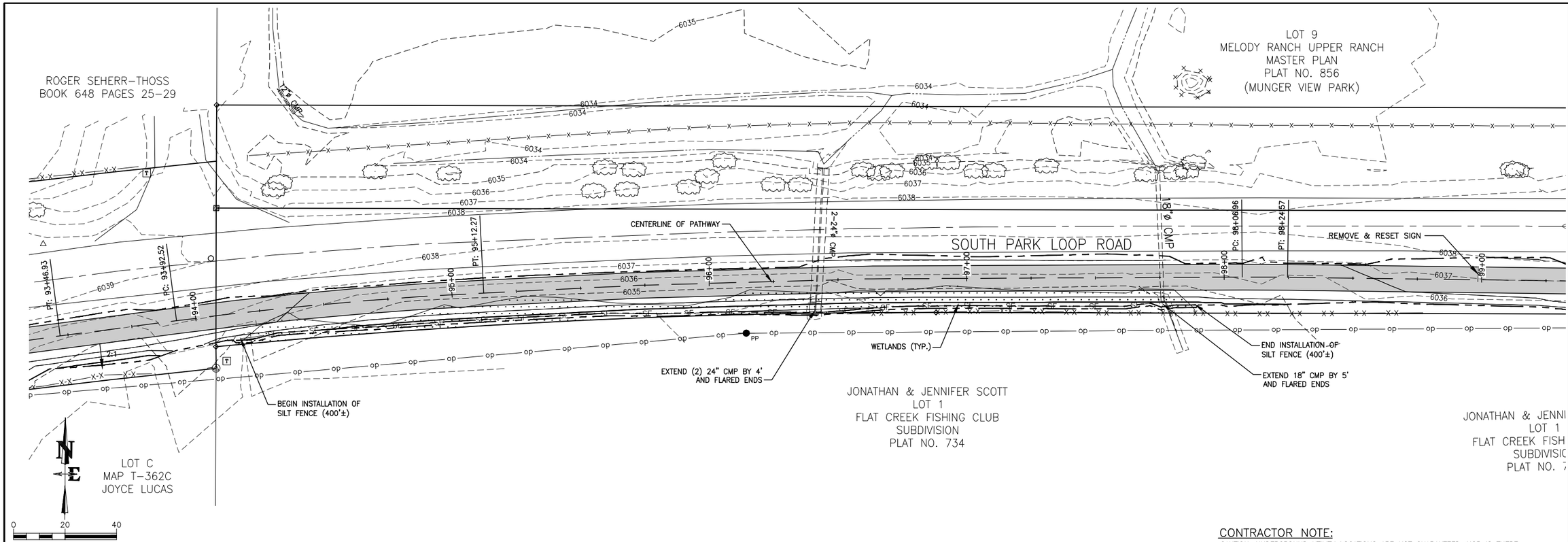

CONTRACTOR NOTE:

CAUTION: UNDERGROUND UTILITY LOCATIONS ARE NOT GUARANTEED, NOR IS THERE ANY GUARANTEE THAT ALL EXISTING UTILITIES (WHETHER FUNCTIONAL OR ABANDONED) WITHIN THE PROJECT AREA ARE SHOWN ON THESE DRAWINGS. THE CONTRACTOR SHALL DETERMINE THE EXACT LOCATION OF ALL UNDERGROUND UTILITIES BEFORE STARTING WORK. THE CONTRACTOR SHALL BE RESPONSIBLE FOR ALL DAMAGE RESULTING FROM CONTRACTORS WORK.

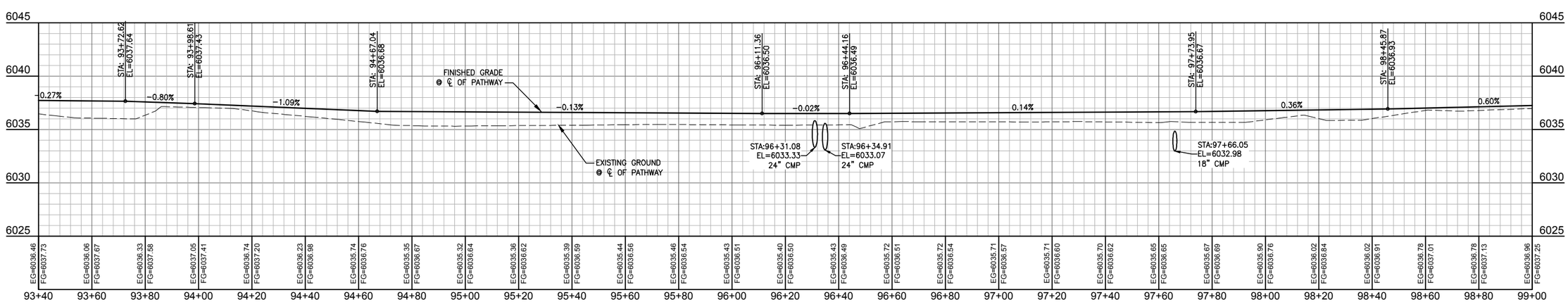

DATE	3/25/16	REV.
SURVEYED	NE	
ENGINEERED	DD	
DRAWN	DB	
CHECKED	DD	
APPROVED	DD	

NELSON ENGINEERING
P.O. BOX 1599, JACKSON WYOMING (307) 733-2087

DRAWING TITLE
PATHWAY ALIGNMENT
PLAN & PROFILE
STA. 93+40.00 - 99+00.00

JOB TITLE
SOUTH PARK LOOP
CONNECTOR PATHWAY PROJECT
TETON COUNTY, WY

DRAWING NO 3.17

JOB NO 15-257-02

S:\Proj2015\257-02 Design - South Park Loop Pathway Connector\Drawings\Layout Drawings\P&P PATHWAY CL 15-18.dwg C317 STA 93+40.00 - 99+00.00 - Mar 25 2016 05:22:26 pm PLOTTED BY: kerichner DWG FORMAT: 19.1

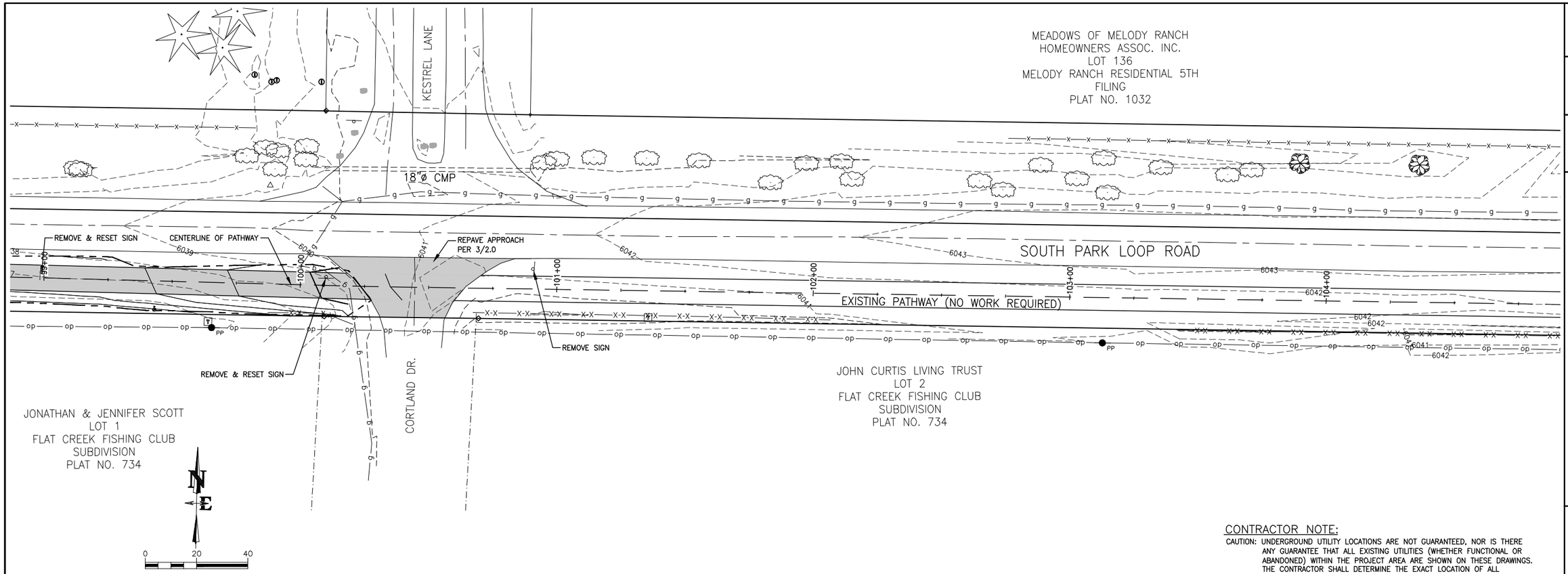

CONTRACTOR NOTE:

CAUTION: UNDERGROUND UTILITY LOCATIONS ARE NOT GUARANTEED, NOR IS THERE ANY GUARANTEE THAT ALL EXISTING UTILITIES (WHETHER FUNCTIONAL OR ABANDONED) WITHIN THE PROJECT AREA ARE SHOWN ON THESE DRAWINGS. THE CONTRACTOR SHALL DETERMINE THE EXACT LOCATION OF ALL UNDERGROUND UTILITIES BEFORE STARTING WORK. THE CONTRACTOR SHALL BE RESPONSIBLE FOR ALL DAMAGE RESULTING FROM CONTRACTORS WORK.

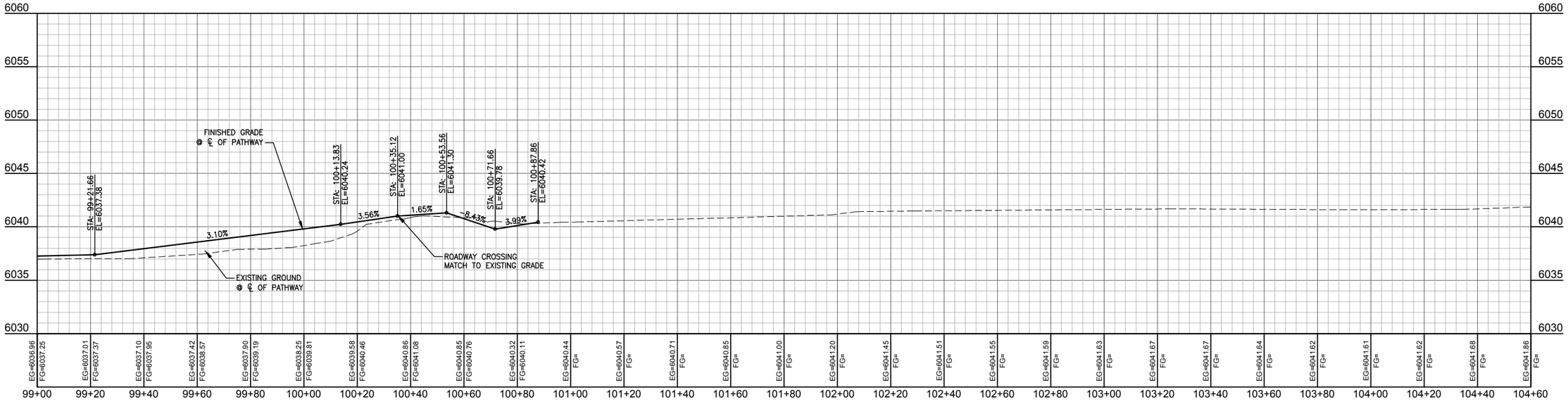

PATHWAY CL PROFILE
SCALE: (H) 1" = 10' (V) 1" = 2'
START STA: 99+00.00, END STA: 104+60.00

DATE	3/25/16	REV.
SURVEYED	NE	
ENGINEERED	DD	
DRAWN	DB	
CHECKED	DD	
APPROVED	DD	

NELSON ENGINEERING
P.O. BOX 1599, JACKSON WYOMING (307) 733-2087

DRAWING TITLE
PATHWAY ALIGNMENT
PLAN & PROFILE
STA. 99+00.00 - 104+60.00

JOB TITLE
SOUTH PARK LOOP
CONNECTOR PATHWAY PROJECT
TETON COUNTY, WY

DRAWING NO 3.18

JOB NO 15-257-02

S:\Proj2015\257-02 (Design - South Park Loop Pathway Connector)\Drawings\Layout Drawings\P&P PATHWAY CL 15-18.dwg <3.18 STA. 99+00.00 - 104+60.00> - Mar 25 2016 05:22:50 pm PLOTTED BY: kanichner DWG FORMAT: 19.1

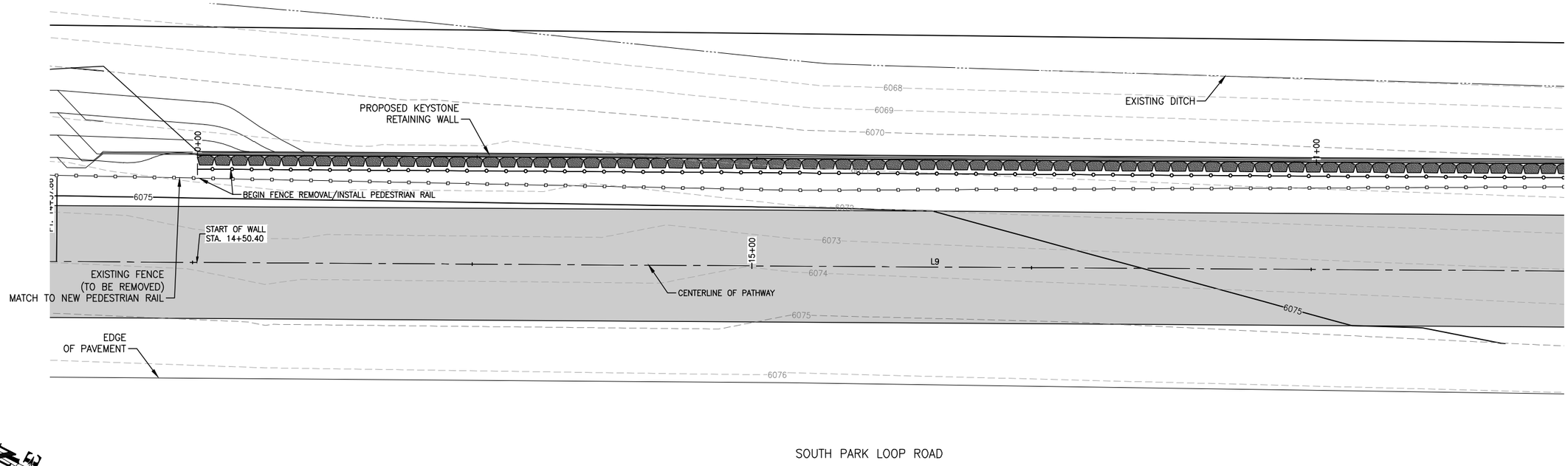

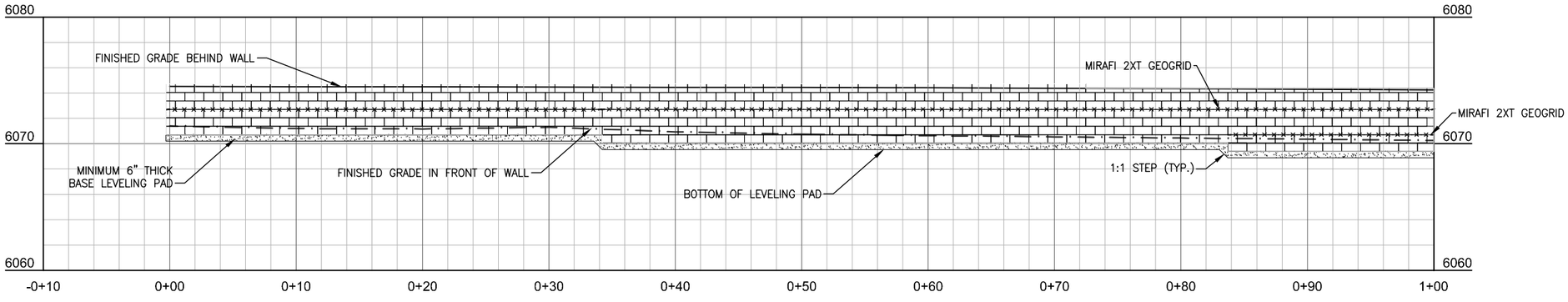

RETAINING WALL A (STA 0+00 – 1+00)

GENERAL NOTES:
1. USE KEYSTONE COMPAC BLOCK UNITS. CAP UNITS CAN BE COMPAC FULL OR HALF HEIGHT BLOCKS.
2. LAYOUT WALLS PER THE CIVIL DRAWINGS CONSIDERING A WALL FACE BATTER OF 1(H) TO 8(V).
3. STEP LOCATIONS SHALL NOT VARY MORE THAN 2 BLOCKS TO MATCH GRADES IN THE FIELD.
4. MINIMUM WALL EMBEDMENT SHALL BE NO LESS THAN 0.5 FEET WITH A LEVEL SLOPE IN FRONT OF WALLS.
5. GEOGRID LENGTH SHALL BE A MINIMUM OF 4–FT, MEASURED FROM THE FRONT OF WALL FACE, UNLESS OTHERWISE NOTED ON PROFILE IN SQUARE ON GRID LAYER. THE SQUARE INDICATES THE LENGTH AND DIRECTION ALONG THE PROFILE THE GRID LENGTH WILL CHANGE.

GEOGRID KEY:

MIRAFI 2XT GEOGRID

GEOGRID LENGTH FOR THIS LAYER ONLY — 4.5 FT

REV.		
3/25/16	NE	
DATE	SURVEYED	
	ENGINEERED	DD
	DRAWN	DB
	CHECKED	DD
	APPROVED	DD

NELSON ENGINEERING
P.O. BOX 1599, JACKSON WYOMING (307) 733-2087

DRAWING TITLE
RETAINING WALL A
PLAN AND PROFILE
STATION 00+00 TO 1+00

JOB TITLE
SOUTH PARK LOOP
CONNECTOR PATHWAY PROJECT
TETON COUNTY, WY

DRAWING NO 4.0

JOB NO 15-257-02

S:\Proj\2015\257-02 Design - South Park Loop Pathway Connector\Drawings\RETAINING WALLs\dwg\KEYWALL A3 - Mar 25 2016 05:44:4 pm PLOTTED BY kwichmer DWG FORMAT: 191

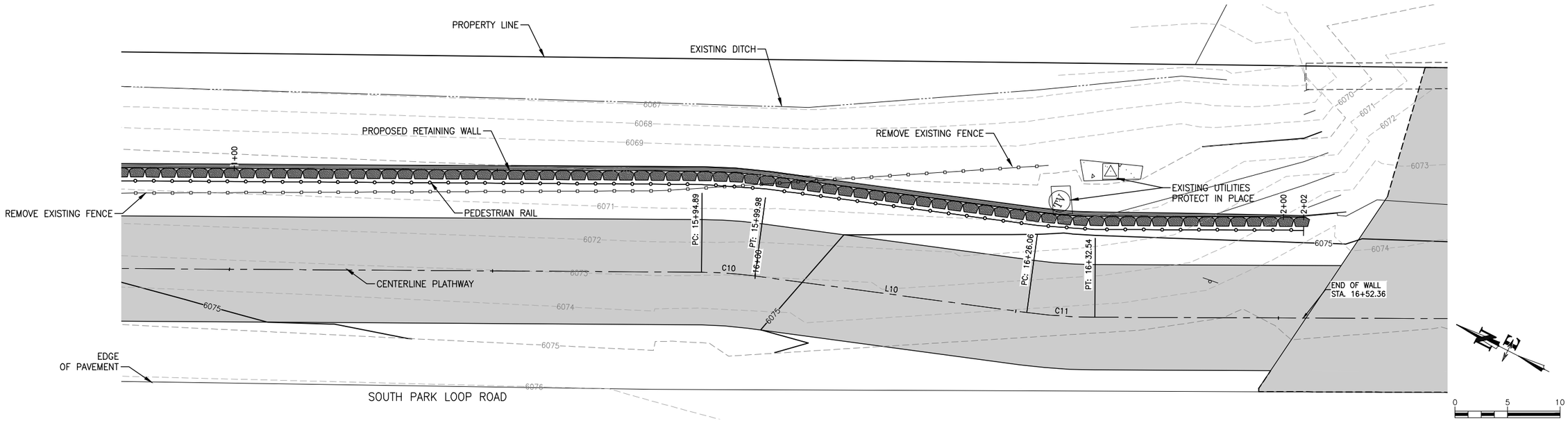

RETAINING WALL A (STA 1+00 – 2+02)

GENERAL NOTES:
1. USE KEYSTONE COMPAC BLOCK UNITS. CAP UNITS CAN BE COMPAC FULL OR HALF HEIGHT BLOCKS.
2. LAYOUT WALLS PER THE CIVIL DRAWINGS CONSIDERING A WALL FACE BATTER OF 1(H) TO 8(V).
3. STEP LOCATIONS SHALL NOT VARY MORE THAN 2 BLOCKS TO MATCH GRADES IN THE FIELD.
4. MINIMUM WALL EMBEDMENT SHALL BE NO LESS THAN 0.5 FEET WITH A LEVEL SLOPE IN FRONT OF WALLS.
5. GEOGRID LENGTH SHALL BE A MINIMUM OF 4-FT, MEASURED FROM THE FRONT OF WALL FACE, UNLESS OTHERWISE NOTED ON PROFILE IN SQUARE ON GRID LAYER. THE SQUARE INDICATES THE LENGTH AND DIRECTION ALONG THE PROFILE THE GRID LENGTH WILL CHANGE.

GEOGRID KEY:

MIRAFI 2XT GEOGRID –×·×·×·×·×·×·×·×–

GEOGRID LENGTH FOR THIS LAYER ONLY 4.5 FT

DATE	3/25/16	REV.
SURVEYED	NE	
ENGINEERED	DD	
DRAWN	DB	
CHECKED	DD	
APPROVED	DD	

NELSON ENGINEERING
P.O. BOX 1599, JACKSON WYOMING (307) 733-2087

DRAWING TITLE
RETAINING WALL A
PLAN AND PROFILE
STATION 1+00 TO 2+02

JOB TITLE
SOUTH PARK LOOP
CONNECTOR PATHWAY PROJECT
TETON COUNTY, WY

DRAWING NO 4.1

JOB NO 15-257-02

S:\Proj2015\257-02 (Design - South Park Loop Pathway Connector)\Drawings\RETAINING WALL.dwg (RETAINING WALL A) - Mar 25 2016 05:24:39 pm PLOTTED BY: kurichner DWG FORMAT: 19.1

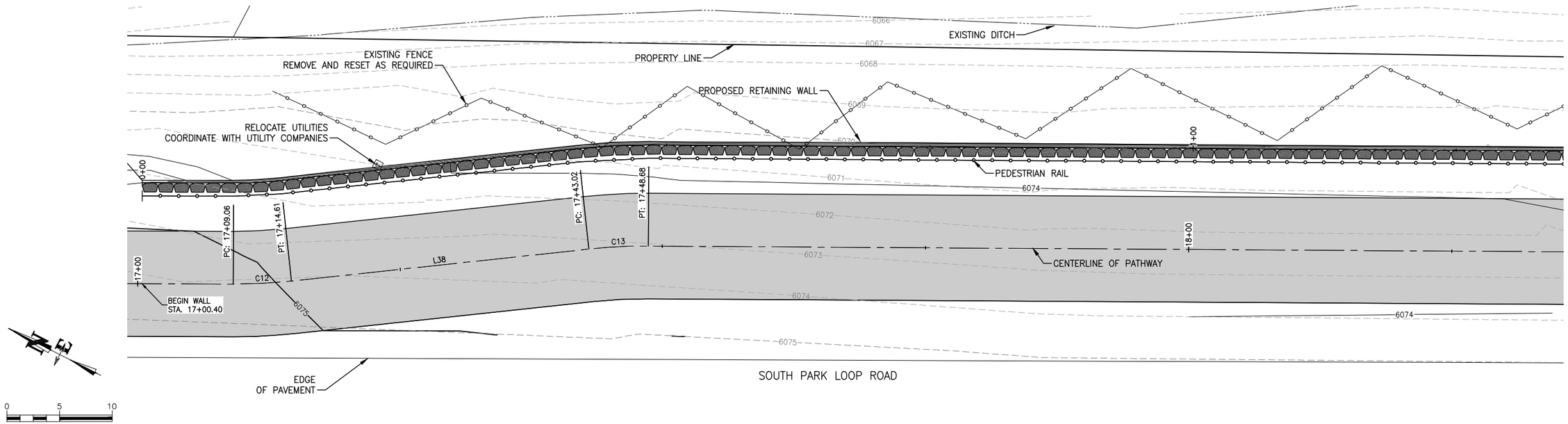

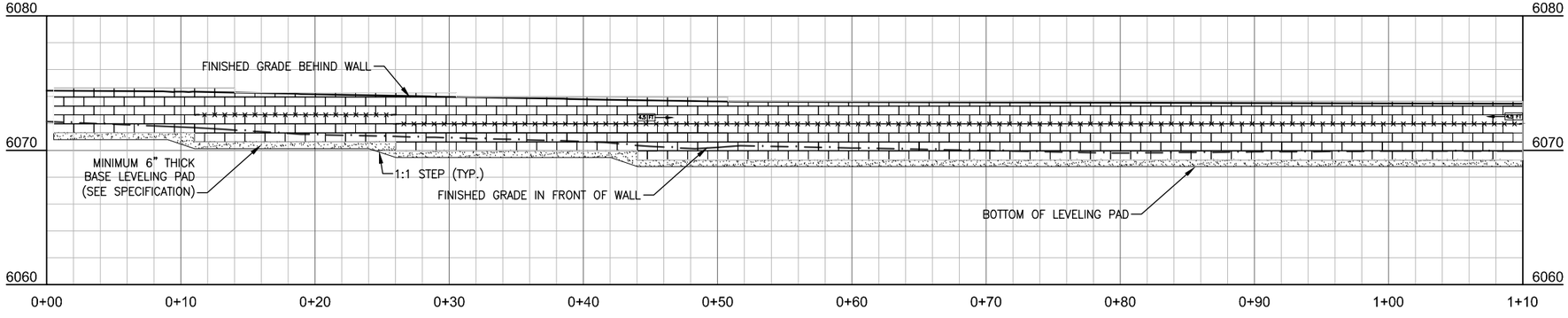

RETAINING WALL B (STA 0+00 – 1+10)

GENERAL NOTES:
1. USE KEYSTONE COMPAC BLOCK UNITS. CAP UNITS CAN BE COMPAC FULL OR HALF HEIGHT BLOCKS.
2. LAYOUT WALLS PER THE CIVIL DRAWINGS CONSIDERING A WALL FACE BATTER OF 1(H) TO 8(V).
3. STEP LOCATIONS SHALL NOT VARY MORE THAN 2 BLOCKS TO MATCH GRADES IN THE FIELD.
4. MINIMUM WALL EMBEDMENT SHALL BE NO LESS THAN 0.5 FEET WITH A LEVEL SLOPE IN FRONT OF WALLS.
5. GEOGRID LENGTH SHALL BE A MINIMUM OF 4–FT, MEASURED FROM THE FRONT OF WALL FACE, UNLESS OTHERWISE NOTED ON PROFILE IN SQUARE ON GRID LAYER. THE SQUARE INDICATES THE LENGTH AND DIRECTION ALONG THE PROFILE THE GRID LENGTH WILL CHANGE.

GEOGRID KEY:

MIRAFI 2XT GEOGRID –×·×·×·×·×·×·×·×–

GEOGRID LENGTH FOR THIS LAYER ONLY 4.5 FT

NELSON ENGINEERING
P.O. BOX 1599, JACKSON WYOMING (307) 733–2087

DATE	3/25/16
SURVEYED	NE
ENGINEERED	DD
DRAWN	DB
CHECKED	DD
APPROVED	DD

REV.

DRAWING TITLE
RETAINING WALL B
PLAN AND PROFILE
STA 0+00 TO 1+80

JOB TITLE
SOUTH PARK LOOP
CONNECTOR PATHWAY PROJECT
TETON COUNTY, WY

DRAWING NO 4.2

JOB NO 15–257–02

S:\Proj2015\257-02 (Design - South Park Loop Pathway Connector)\Drawings\RETAINING WALL.dwg (RETAINING WALL B) - Mar 25 2016 05:25:04 pm PLOTTED BY: karichner DWG FORMAT: 19.1

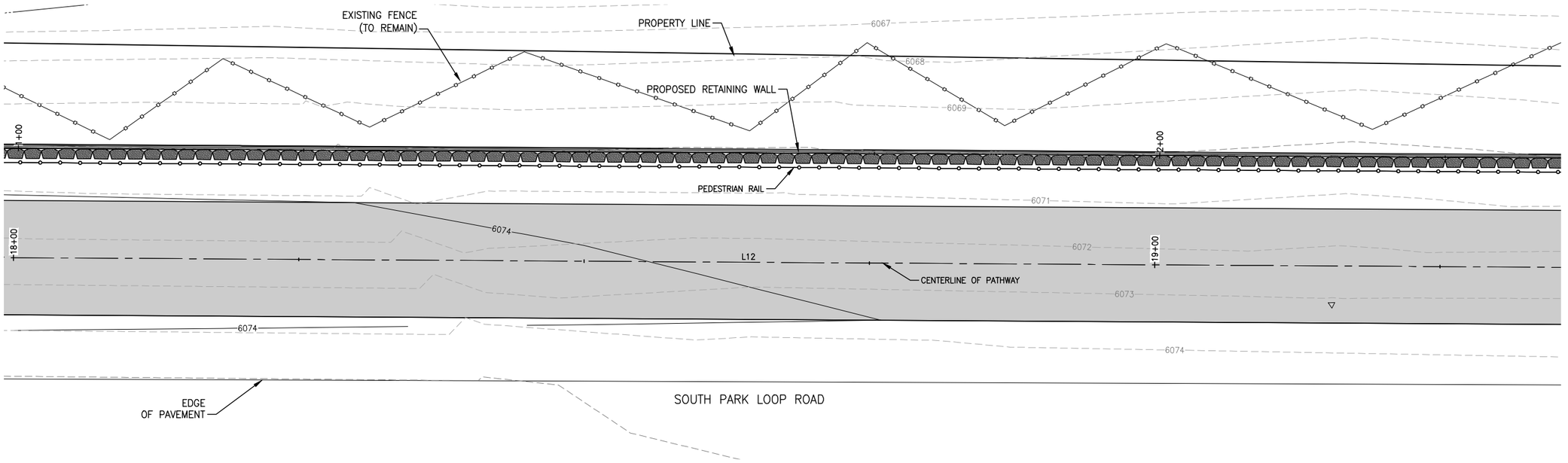

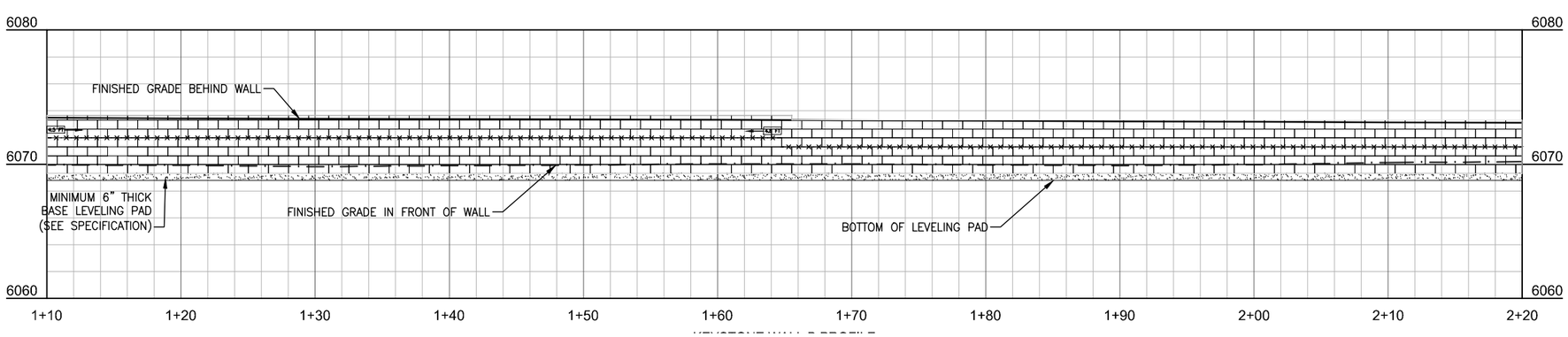

RETAINING WALL B (STA 1+10 – 2+20)

GENERAL NOTES:
1. USE KEYSTONE COMPAC BLOCK UNITS. CAP UNITS CAN BE COMPAC FULL OR HALF HEIGHT BLOCKS.
2. LAYOUT WALLS PER THE CIVIL DRAWINGS CONSIDERING A WALL FACE BATTER OF 1(H) TO 8(V).
3. STEP LOCATIONS SHALL NOT VARY MORE THAN 2 BLOCKS TO MATCH GRADES IN THE FIELD.
4. MINIMUM WALL EMBEDMENT SHALL BE NO LESS THAN 0.5 FEET WITH A LEVEL SLOPE IN FRONT OF WALLS.
5. GEOGRID LENGTH SHALL BE A MINIMUM OF 4–FT, MEASURED FROM THE FRONT OF WALL FACE, UNLESS OTHERWISE NOTED ON PROFILE IN SQUARE ON GRID LAYER. THE SQUARE INDICATES THE LENGTH AND DIRECTION ALONG THE PROFILE THE GRID LENGTH WILL CHANGE.

GEOGRID KEY:

MIRAFI 2XT GEOGRID — × · × · × · × · × · × · × —

GEOGRID LENGTH FOR THIS LAYER ONLY — 4.5 FT →

DATE	3/25/16	REV.
SURVEYED	NE	
ENGINEERED	DD	
DRAWN	DB	
CHECKED	DD	
APPROVED	DD	

NELSON ENGINEERING
P.O. BOX 1599, JACKSON WYOMING (307) 733-2087

DRAWING TITLE
RETAINING WALL B
PLAN AND PROFILE
STA 1+10 TO 2+20

JOB TITLE
SOUTH PARK LOOP
CONNECTOR PATHWAY PROJECT
TETON COUNTY, WY

DRAWING NO
4.3

JOB NO
15-257-02

S:\Proj2015\257-02 (Design - South Park Loop Pathway Connector)\Drawings\RETAINING WALL.dwg (4.3 KEYWALL B (2)) - Mar 25 2016 05:25:29 pm PLOTTED BY: karichner DWG FORMAT: 19.1

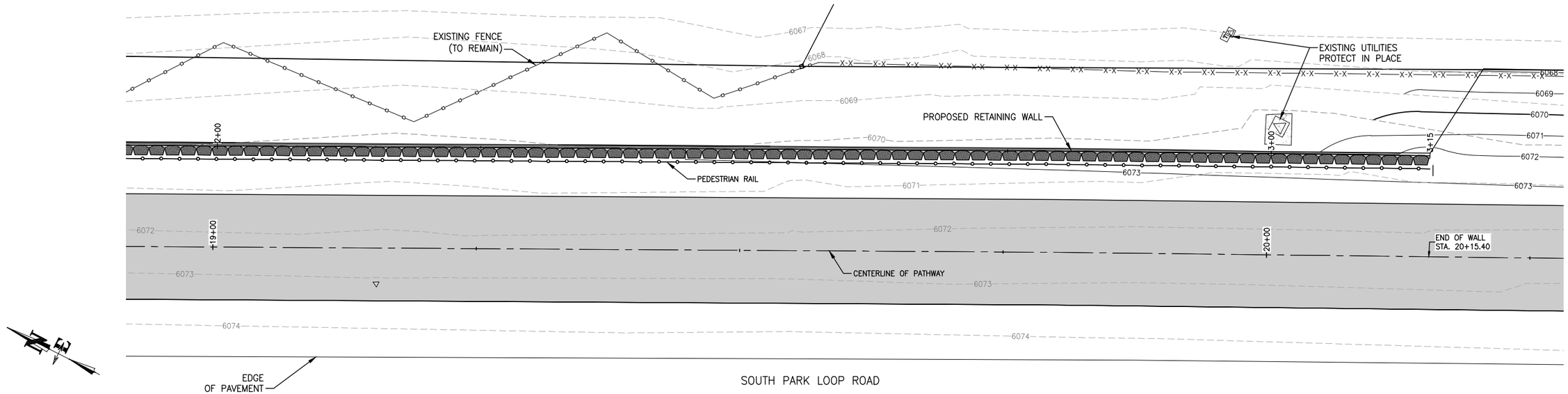

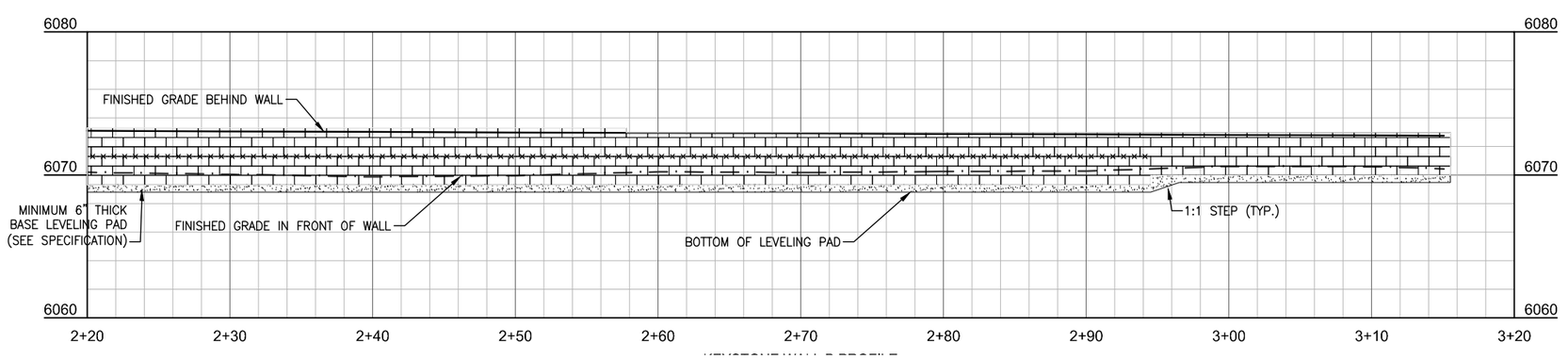

RETAINING WALL B (STA 2+20 – 3+15)

GENERAL NOTES:
1. USE KEYSTONE COMPAC BLOCK UNITS. CAP UNITS CAN BE COMPAC FULL OR HALF HEIGHT BLOCKS.
2. LAYOUT WALLS PER THE CIVIL DRAWINGS CONSIDERING A WALL FACE BATTER OF 1(H) TO 8(V).
3. STEP LOCATIONS SHALL NOT VARY MORE THAN 2 BLOCKS TO MATCH GRADES IN THE FIELD.
4. MINIMUM WALL EMBEDMENT SHALL BE NO LESS THAN 0.5 FEET WITH A LEVEL SLOPE IN FRONT OF WALLS.
5. GEOGRID LENGTH SHALL BE A MINIMUM OF 4–FT, MEASURED FROM THE FRONT OF WALL FACE, UNLESS OTHERWISE NOTED ON PROFILE IN SQUARE ON GRID LAYER. THE SQUARE INDICATES THE LENGTH AND DIRECTION ALONG THE PROFILE THE GRID LENGTH WILL CHANGE.

GEOGRID KEY:

MIRAFI 2XT GEOGRID –×·×·×·×·×·×·×–

GEOGRID LENGTH FOR THIS LAYER ONLY 4.5 FT

DATE	3/25/16
SURVEYED	NE
ENGINEERED	DD
DRAWN	DB
CHECKED	DD
APPROVED	DD

REV.

NELSON ENGINEERING
P.O. BOX 1599, JACKSON WYOMING (307) 733–2087

DRAWING TITLE
RETAINING WALL B
PLAN AND PROFILE
STA 2+20 TO 3+15

JOB TITLE
SOUTH PARK LOOP
CONNECTOR PATHWAY PROJECT
TETON COUNTY, WY

DRAWING NO
4.4

JOB NO
15–257–02

S:\Proj2015\257-02 (Design - South Park Loop Pathway Connector)\Drawings\RETAINING WALL.dwg (4.4 KEYWALL B (3)) - Mar 25 2016 05:25:54 pm PLOTTED BY: karichner DWG FORMAT: 19.1

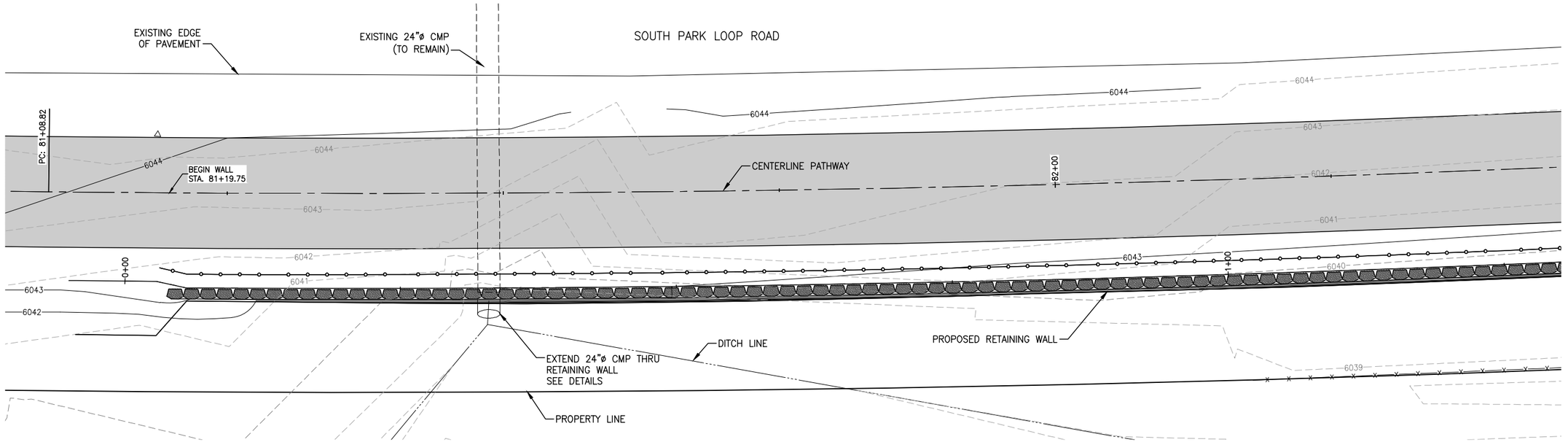

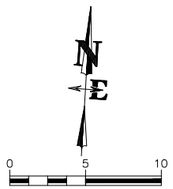

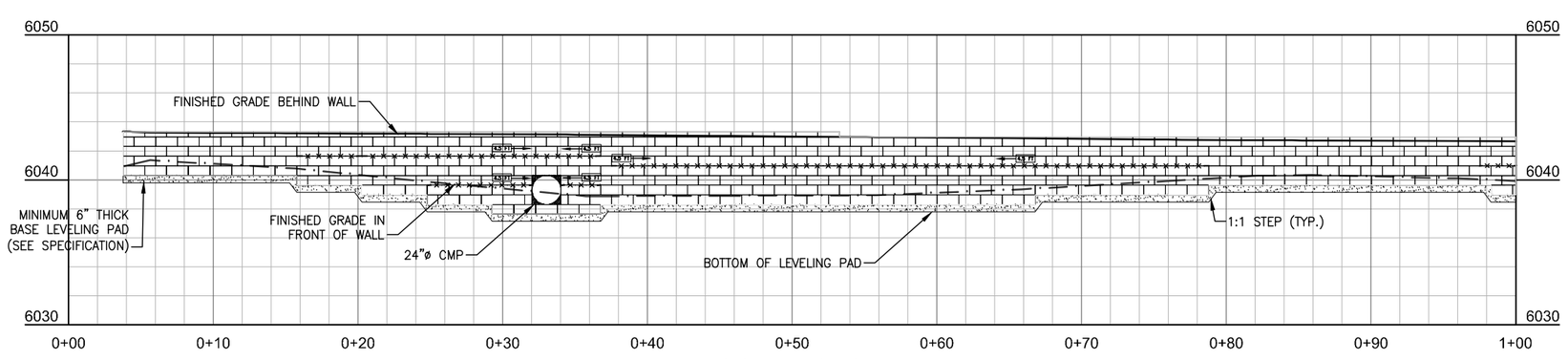

RETAINING WALL C (STA 0+00 – 1+00)

GENERAL NOTES:
1. USE KEYSTONE COMPAC BLOCK UNITS. CAP UNITS CAN BE COMPAC FULL OR HALF HEIGHT BLOCKS.
2. LAYOUT WALLS PER THE CIVIL DRAWINGS CONSIDERING A WALL FACE BATTER OF 1(H) TO 8(V).
3. STEP LOCATIONS SHALL NOT VARY MORE THAN 2 BLOCKS TO MATCH GRADES IN THE FIELD.
4. MINIMUM WALL EMBEDMENT SHALL BE NO LESS THAN 0.5 FEET WITH A LEVEL SLOPE IN FRONT OF WALLS.
5. GEOGRID LENGTH SHALL BE A MINIMUM OF 4–FT, MEASURED FROM THE FRONT OF WALL FACE, UNLESS OTHERWISE NOTED ON PROFILE IN SQUARE ON GRID LAYER. THE SQUARE INDICATES THE LENGTH AND DIRECTION ALONG THE PROFILE THE GRID LENGTH WILL CHANGE.

GEOGRID KEY:

MIRAFI 2XT GEOGRID

GEOGRID LENGTH FOR THIS LAYER ONLY — 4.5 FT

REV.	DATE	SURVEYED	ENGINEERED	DRAWN	CHECKED	APPROVED
	3/25/16	NE	DD	DB	DD	DD

NELSON ENGINEERING
P.O. BOX 1599, JACKSON WYOMING (307) 733–2087

DRAWING TITLE: RETAINING WALL C PLAN AND PROFILE STA 0+00 TO 1+00

JOB TITLE: SOUTH PARK LOOP CONNECTOR PATHWAY PROJECT TETON COUNTY, WY

DRAWING NO: 4.5

JOB NO: 15–257–02

S:\Proj\2015\257-02 (Design - South Park Loop Pathway Connector)\Drawings\RETAINING WALL.dwg (RETAINING WALL C) - Mar 25 2016 - 05:26:19 pm PLOTTED BY: HarOckner DWG FORMAT: 191

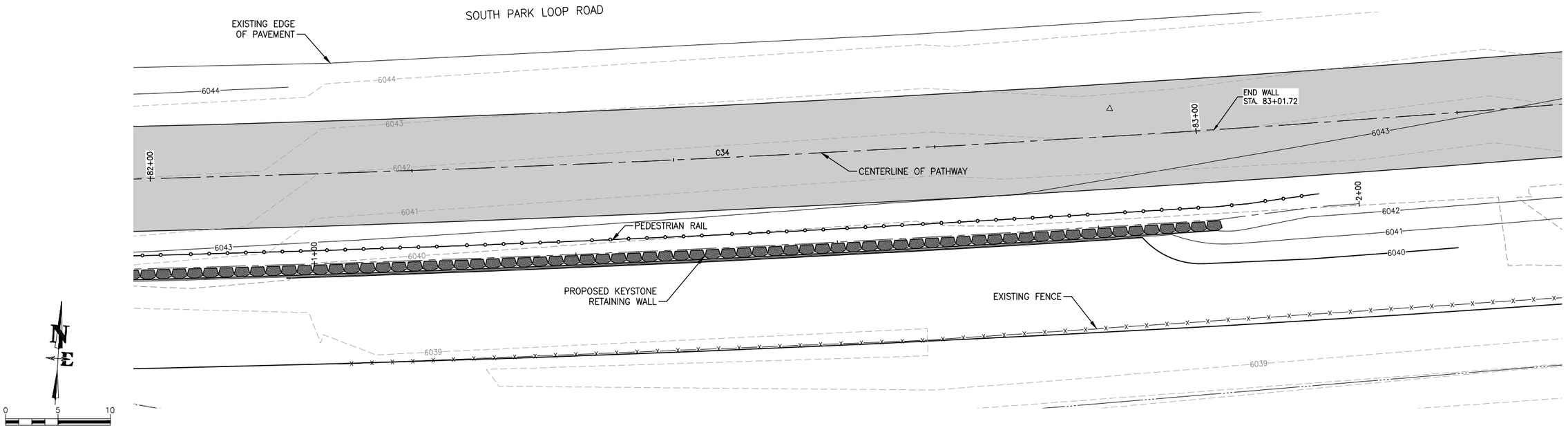

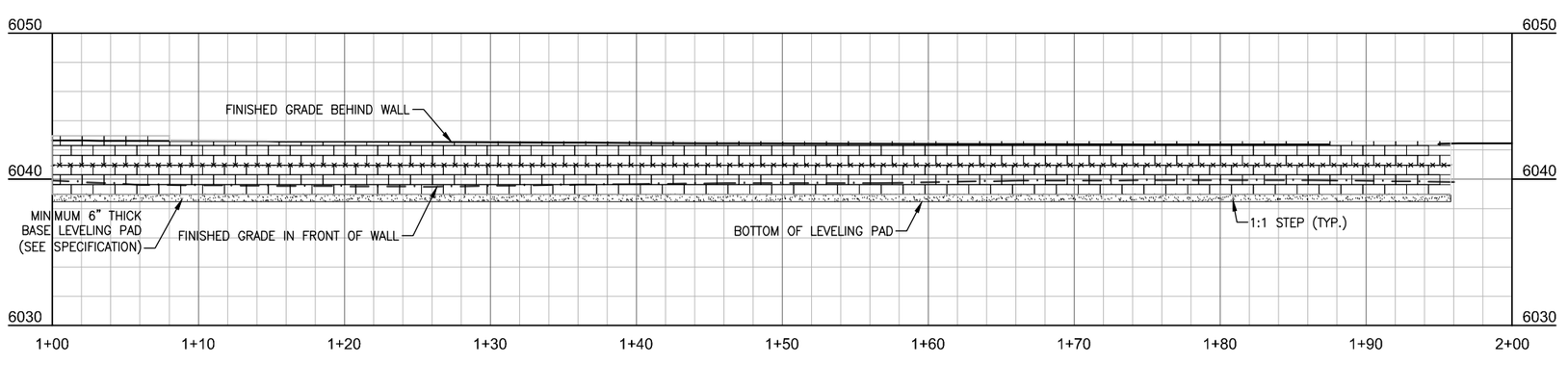

RETAINING WALL C (STA 0+00 – 1+96)

GENERAL NOTES:
1. USE KEYSTONE COMPAC BLOCK UNITS. CAP UNITS CAN BE COMPAC FULL OR HALF HEIGHT BLOCKS.
2. LAYOUT WALLS PER THE CIVIL DRAWINGS CONSIDERING A WALL FACE BATTER OF 1(H) TO 8(V).
3. STEP LOCATIONS SHALL NOT VARY MORE THAN 2 BLOCKS TO MATCH GRADES IN THE FIELD.
4. MINIMUM WALL EMBEDMENT SHALL BE NO LESS THAN 0.5 FEET WITH A LEVEL SLOPE IN FRONT OF WALLS.
5. GEOGRID LENGTH SHALL BE A MINIMUM OF 4–FT, MEASURED FROM THE FRONT OF WALL FACE, UNLESS OTHERWISE NOTED ON PROFILE IN SQUARE ON GRID LAYER. THE SQUARE INDICATES THE LENGTH AND DIRECTION ALONG THE PROFILE THE GRID LENGTH WILL CHANGE.

GEOGRID KEY:

MIRAFI 2XT GEOGRID –×·×·×·×·×·×·×·×–

GEOGRID LENGTH FOR THIS LAYER ONLY 4.5 FT →

NELSON ENGINEERING
P.O. BOX 1599, JACKSON WYOMING (307) 733–2087

		REV.
DATE	3/25/16	
SURVEYED	NE	
ENGINEERED	DD	
DRAWN	DB	
CHECKED	DD	
APPROVED	DD	

DRAWING TITLE
RETAINING WALL C
PLAN AND PROFILE
STA 1+00 TO 2+00

JOB TITLE
SOUTH PARK LOOP
CONNECTOR PATHWAY PROJECT
TETON COUNTY, WY

DRAWING NO 4.6

JOB NO 15–257–02

S:\Proj2015\257-02 (Design - South Park Loop Pathway Connector)\Drawings\RETAINING WALL.dwg (4.6 KEYWALL C (2)) - Mar 25 2016 05:26:45 pm PLOTTED BY: karichner DWG FORMAT: 19.1

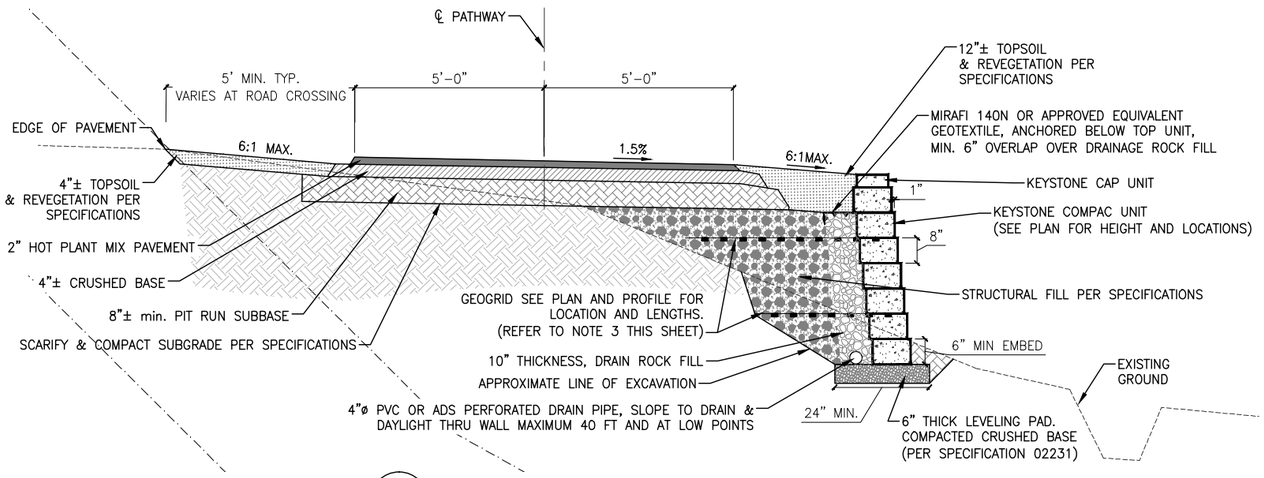

1 / 4.7 KEYSTONE RETAINING WALL TYPICAL SECTION

N.T.S.

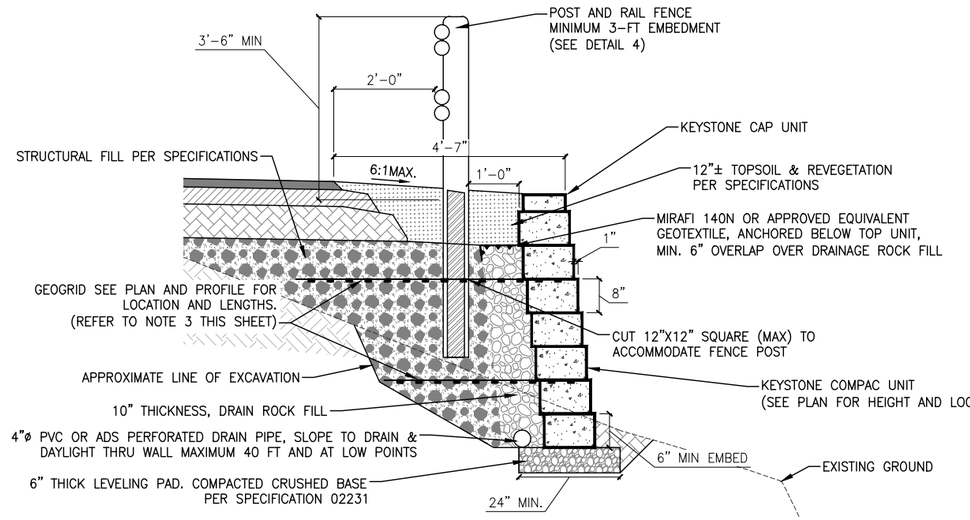

2 / 4.7 KEYSTONE RETAINING WALL WITH POST

N.T.S.

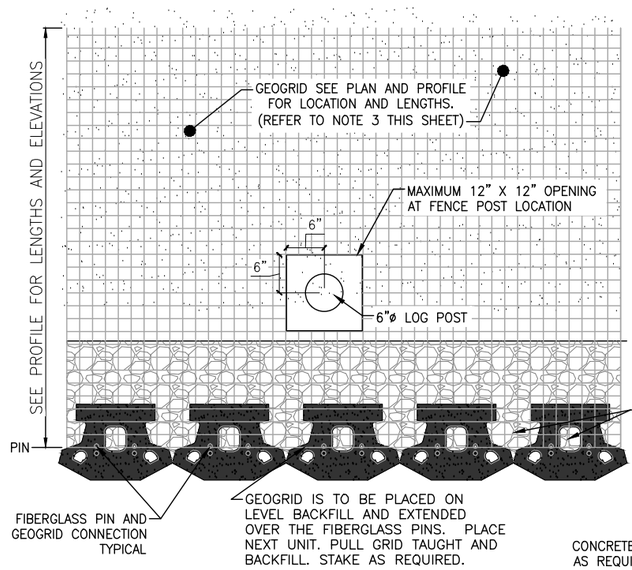

3 / 4.7 GEOGRID & PIN CONNECTION

N.T.S.

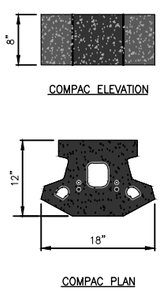

GENERAL NOTES:

1. THE FOUNDATION SUBGRADE IS TO BE APPROVED BY THE ENGINEER PRIOR TO THE PLACEMENT OF THE LEVELING PAD.
2. CONTRACTOR SHALL CONFORM TO THE MANUFACTURERS SPECIFICATIONS FOR CORRECT INSTALLATION AND DIRECTION OF ORIENTATION FOR GEOGRID.
3. THE LENGTH OF GEOGRID SHALL BE MEASURED FROM THE FRONT OF THE WALL FACE AT THE FIBERGLASS PIN AND GEOGRID CONNECTION AS SHOWN IN DETAIL 3 ON THIS SHEET.

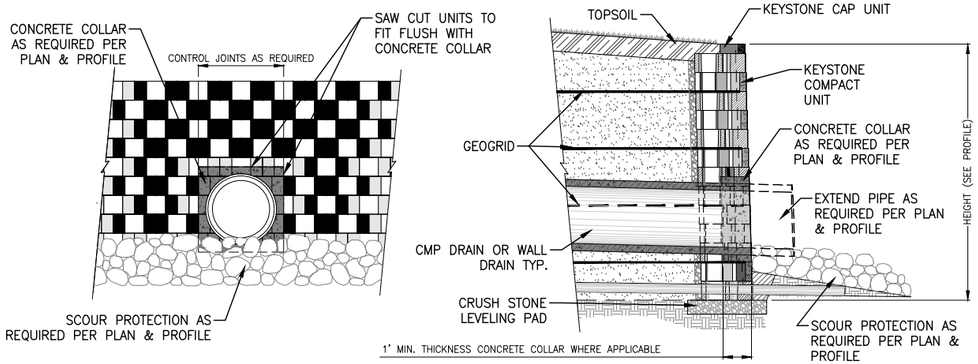

5 / 4.7 TYPICAL PIPE OUTLET DETAIL

N.T.S.

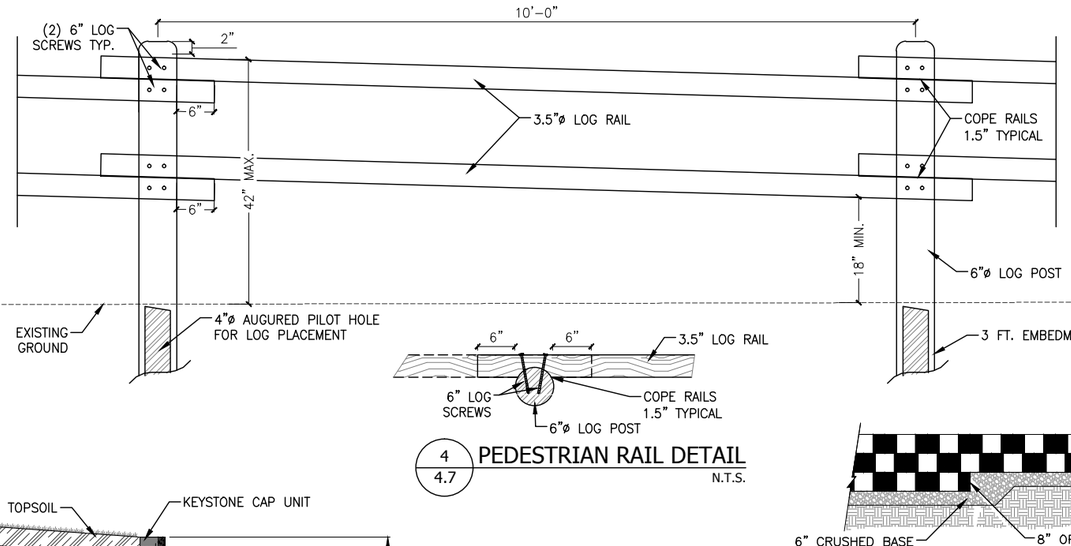

4 / 4.7 PEDESTRIAN RAIL DETAIL

N.T.S.

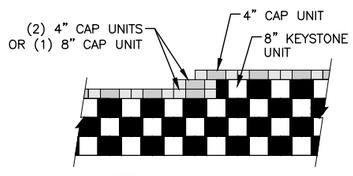

6 / 4.7 TOP OF WALL STEPS

N.T.S.

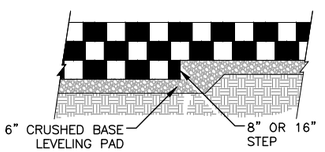

ELEVATION

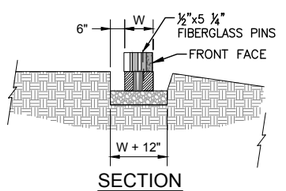

SECTION

7 / 4.7 LEVELING PAD DETAIL

N.T.S.

DATE	REV.
SURVEYED	NE 3/25/2016
ENGINEERED	DD
DRAWN	DB
CHECKED	DD
APPROVED	DD

NELSON ENGINEERING
P.O. BOX 1599, JACKSON WYOMING (307) 733-2087

DRAWING TITLE: KEYSTONE RETAINING WALL TYPICAL SECTIONS AND DETAILS

JOB TITLE: SOUTH PARK LOOP ~~PATHWAY~~ PROJECT ~~CONNECTOR~~ ~~EXTENSION~~
TETON COUNTY, WYOMING

DRAWING NO: 4.7

JOB NO: ~~15-857-08~~

S:\Proj\2015\257-02 Design - South Park Loop Pathway Connector\Drawings\RETAINING WALL.dwg <KEYSTONE RETAINING WALL> - Mar 25 2016 05:27:56 pm PLOTTED BY karchner DWG FORMAT: 191

PROPERTY CORNER

GRAND TETON CIRCLE DR

INSTALL RRFB ASSEMBLY PER DETAIL. CONFIRM ADEQUATE SIGHT DISTANCE WITH ENGINEER PRIOR TO INSTALLATION

PROPERTY BOUNDARY LINES

COMMUNICATIONS PEDESTAL

EXISTING FENCE POSTS

PC: 4+04.60

PT: 4+15.18

4+00

SLOW

SLOW

PC: 3+31.05

INSTALL 4" SOLID YELLOW CENTERLINE

INSTALL 44" TALL "SLOW" MARKING

INSTALL 4" SOLID YELLOW CENTERLINE

INSTALL YIELD LINE – 2' BY 3' YIELD TEETH WITH 1' SPACES

R=8.0'

EDGE OF ROAD

SOUTH PARK LOOP ROAD

PC: 3+19.03

INSTALL 18"X18" R1-1 STOP SIGN

INSTALL 1' STOP BAR

MATCH EXISTING

INSTALL 10' CROSSWALK MARKINGS, 2' BAR WITH 3' SPACE

MATCH EXISTING

3+00

EDGE OF ROAD

INSTALL YIELD LINE – 2' BY 3' YIELD TEETH WITH 1' SPACES

PAVE APPROACH PER DETAIL 3 ON SHEET 2.0

40'±

PC: 2+55.22

PT: 2+24.91

PT: 2+87.73

R=8.0'

INSTALL RRFB ASSEMBLY PER DETAIL

FENCE TO REMAIN

INSTALL 4" SOLID YELLOW CENTERLINE

2+00

INSTALL R1-1

INSTALL 1' STOP BAR

INSTALL 18"X18" R1-1 STOP SIGN

REMOVED POST & RAIL FENCE WITHIN PATHWAY EXTENTS

8.0'±

5.0'±

PT: 2+63.58

PC: 2+71.69

SOUTH PARK CEMETERY ROAD

PC: 1+53.97

PT: 1+67.80

SLOW

3'±

EDGE OF ROAD

INSTALL 2' STOP BAR

INSTALL 44" TALL "SLOW" MARKING

EXISTING WAYFINDING SIGN TO REMAIN IN PLACE OR BE RELOCATED

PROPOSED REALIGNED EDGE OF ROAD

PORTION OF EXISTING APPROACH TO BE REMOVED

"SOUTH PARK CEMETERY" WROUGHT IRON SIGN

PT: 0+98.44

PC: 1+11.86

PT: 1+21.76

1+00

EXISTING FENCE

EXISTING PATHWAY

0 10 20

S:\Proj\2015\257-02 Design - South Park Loop Pathway Connector\1\Drawings\Layout Drawings\PLANVIEW_CROSSING.dwg (NORTHERN SP LOOP CROSSING) - Mar 25 2016 - 05:28:46 pm PLOTTED BY: kwirkheer DWG FORMAT: 151

DATE	3/25/16	REV.
SURVEYED	NE	
ENGINEERED	DD	
DRAWN	DB	
CHECKED	DD	
APPROVED	DD	

NELSON ENGINEERING
P.O. BOX 1599, JACKSON WYOMING (307) 733-2087

DRAWING TITLE
PLANVIEW OF ROAD CROSSING
NORTHERN SOUTH PARK LOOP ROAD

JOB TITLE
SOUTH PARK LOOP
CONNECTOR PATHWAY PROJECT
TETON COUNTY, WY

DRAWING NO 5.0

JOB NO 15-257-02

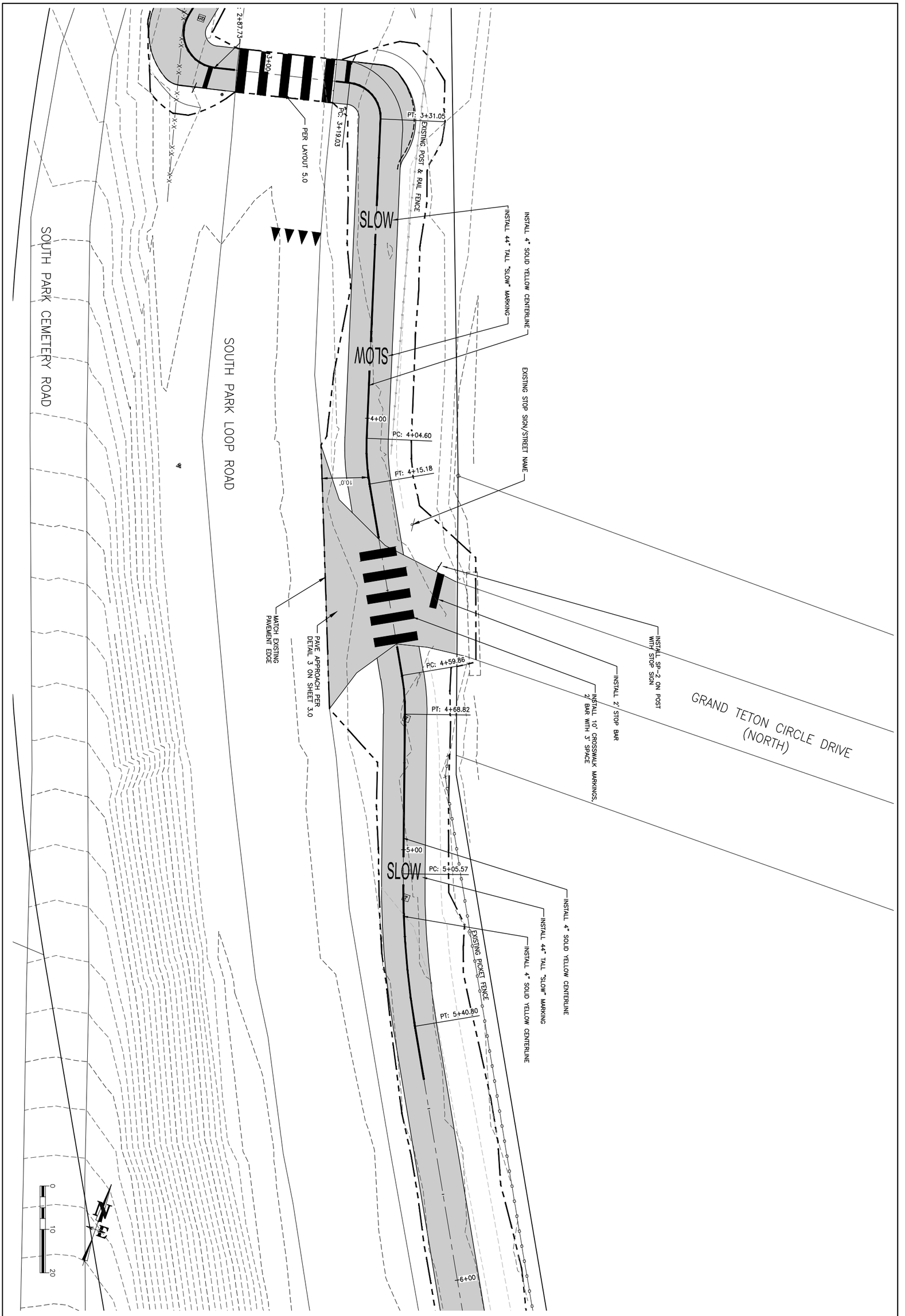

DRAWING NO 5.1	JOB TITLE SOUTH PARK LOOP CONNECTOR PATHWAY PROJECT TETON COUNTY, WY	DRAWING TITLE PLANVIEW OF ROAD CROSSING NORTHERN GRAND TETON CIRCLE DRIVE CROSSING	NELSON ENGINEERING P.O. BOX 1599, JACKSON WYOMING (307) 733-2087	DATE 3/25/16	REV.
JOB NO 15-257-02				SURVEYED NE	
				ENGINEERED DD	
				DRAWN DB	
				CHECKED DD	
				APPROVED DD	

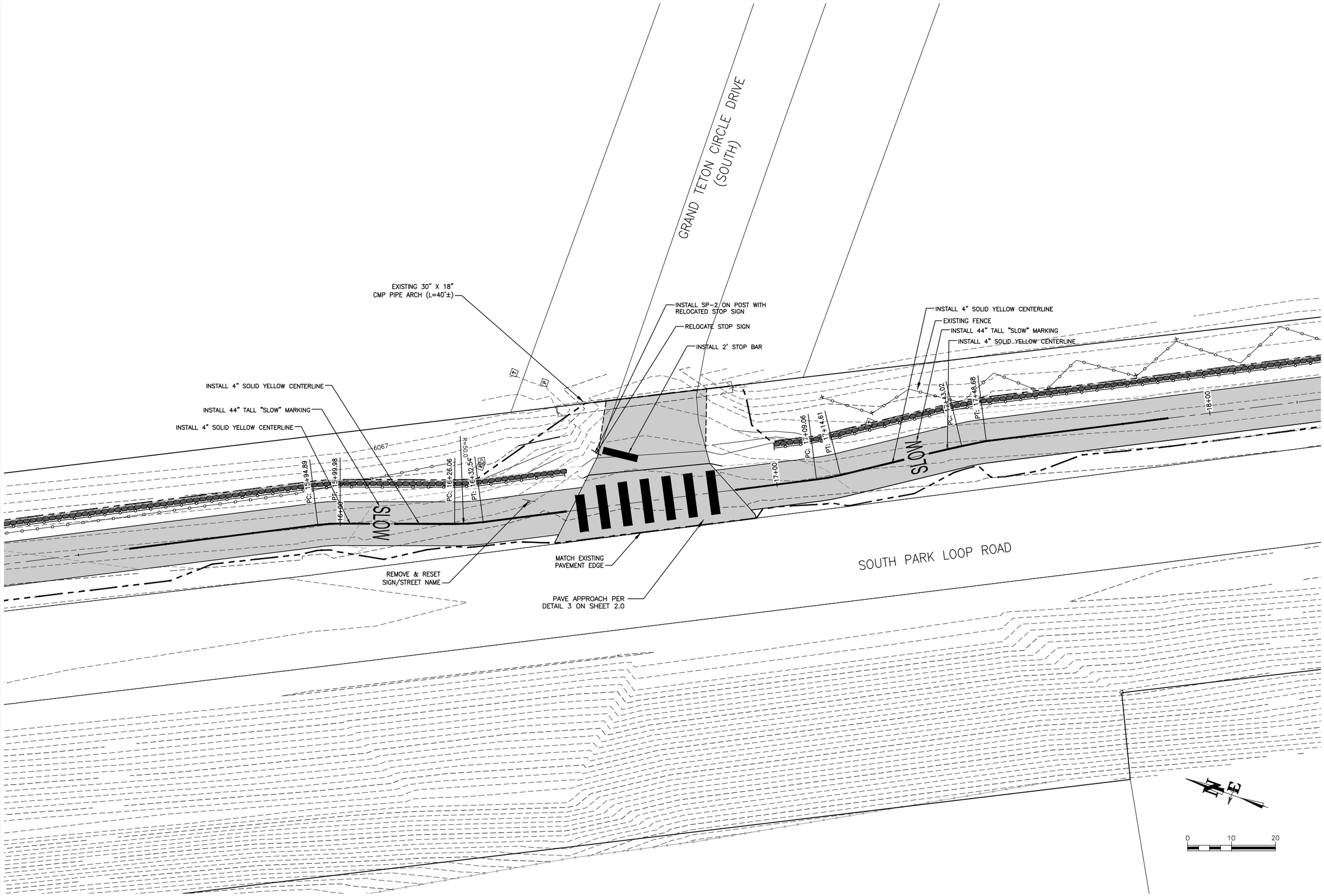

DATE	3/25/16	REV.
SURVEYED	NE	
ENGINEERED	DD	
DRAWN	DB	
CHECKED	DD	
APPROVED	DD	

NELSON ENGINEERING
P.O. BOX 1599, JACKSON WYOMING (307) 733-2087

DRAWING TITLE
PLANVIEW OF ROAD CROSSING
SOUTHERN GRAND TETON
CIRCLE DRIVE CROSSING

JOB TITLE
SOUTH PARK LOOP
CONNECTOR PATHWAY PROJECT
TETON COUNTY, WY

DRAWING NO
5.2

JOB NO
15-257-02

S:\Proj2015\257-02 (Design - South Park Loop Pathway Connector)\Drawings\Layout Drawings\PLANVIEW_CROSSINGS.dwg (GRAND TETON CIRCLE SOUTH CROSSING) - Mar 25 2016 05:29:18 pm PLOTTED BY: karichner DWG FORMAT: 19.1

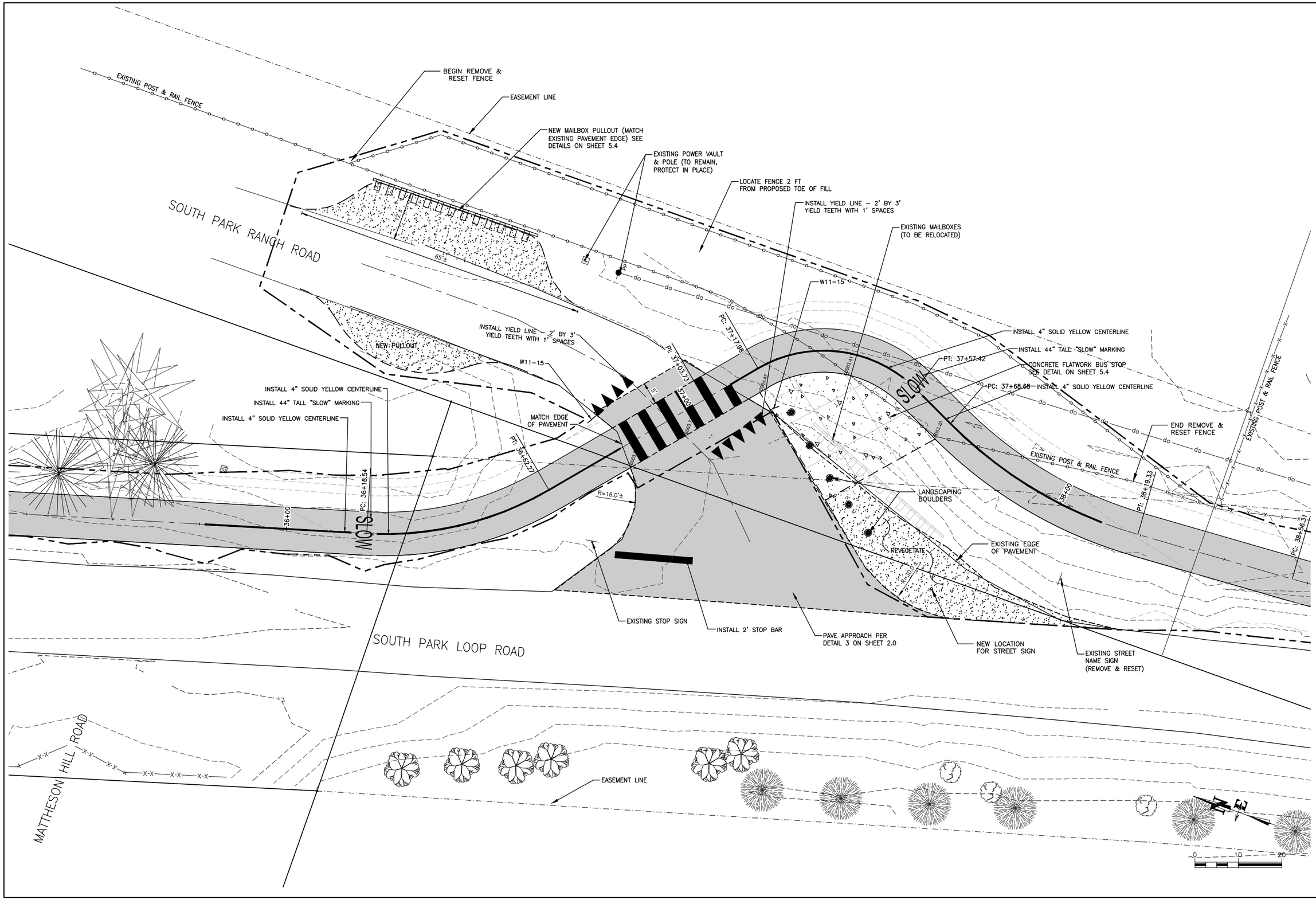

DATE	3/25/16
SURVEYED	NE
ENGINEERED	DD
DRAWN	DB
CHECKED	DD
APPROVED	DD

REV.

NELSON ENGINEERING
P.O. BOX 1599, JACKSON WYOMING (307) 733-2087

DRAWING TITLE
PLANVIEW OF ROAD CROSSING
SOUTH PARK RANCH ROAD

JOB TITLE
SOUTH PARK LOOP
CONNECTOR PATHWAY PROJECT
TETON COUNTY, WY

DRAWING NO
5.3

JOB NO
15-257-02

S:\Proj2015\257-02 Design - South Park Loop Pathway Connector\Drawings\Layout Drawings\PLANVIEW_CROSSINGS.dwg CSP RANCH CROSSING - Mar 25 2016 05:29:33 pm PLOTTED BY: karichner DWG FORMAT: 19.1

NOTE: NEW STRUCTURE TO BE BUILT FOR EXISTING MAILBOXES, ARRANGED NUMERICALLY BY STREET NUMBER. ~45 BOXES EXISTING. PROVIDING SPACE FOR ~60 TOTAL MAILBOXES.

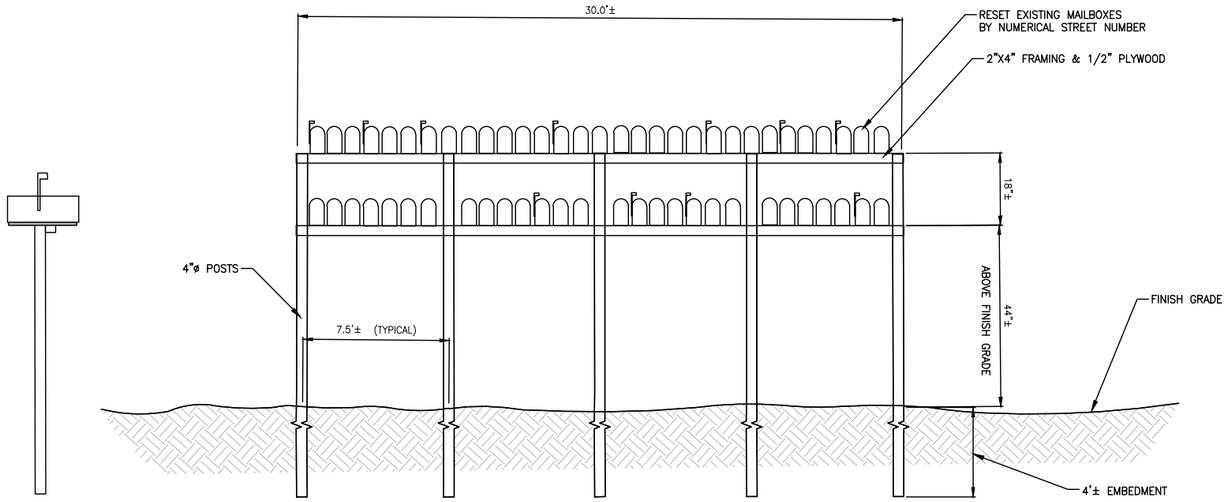

1 / 5.4 MAILBOX ASSEMBLY

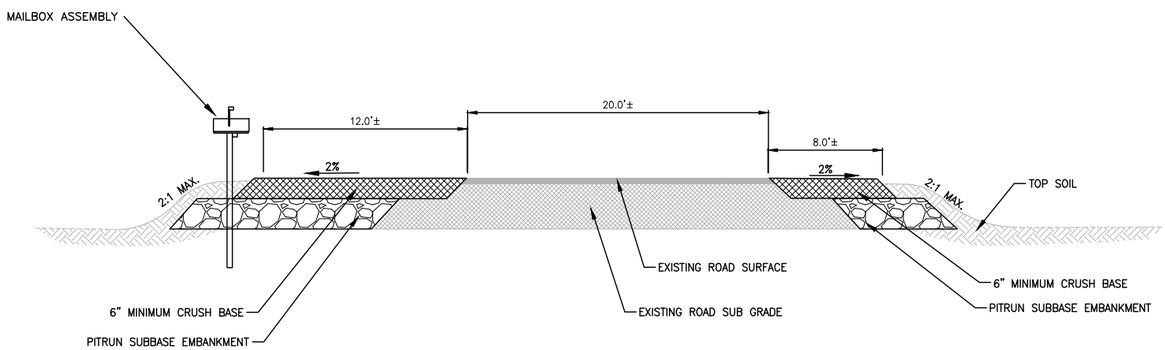

2 / 5.4 PATHWAY SECTION: SOUTH PARK RANCH RD MAILBOX PULLOUT

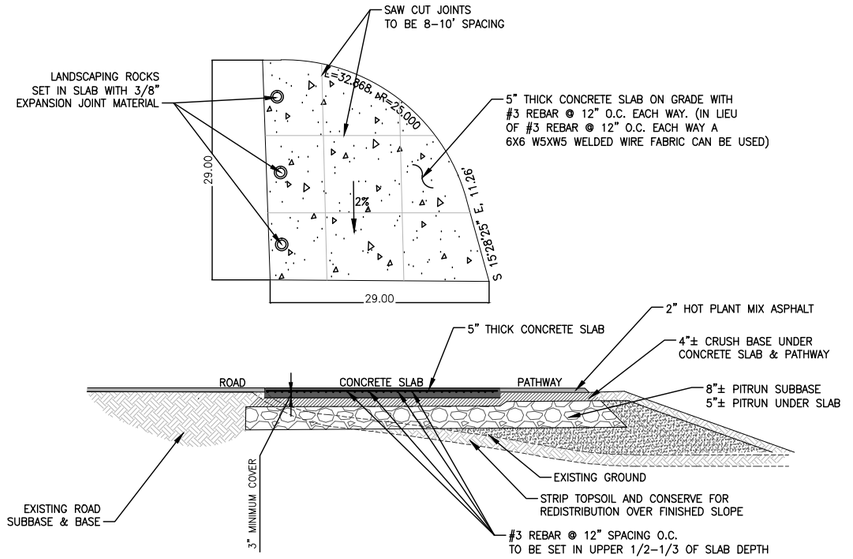

3 / 5.4 PLAN & SECTION VIEW: BUS STOP SLAB

DATE	3/25/2016	REV.
SURVEYED	NE	
ENGINEERED	NE	
DRAWN	AL	
CHECKED	DD	
APPROVED	DD	

NELSON ENGINEERING
P.O. BOX 1599, JACKSON WYOMING (307) 733-2087

DRAWING TITLE
DETAILS & SECTIONS
SOUTH PARK RANCH ROAD DETAILS

JOB TITLE
SOUTH PARK LOOP
CONNECTOR PATHWAY PROJECT
TETON COUNTY, WY

DRAWING NO 5.4

JOB NO 15-257-02

S:\Proj2015\257-02 (Design - South Park Loop Pathway Connector)\Drawings\DETAILS & SECTIONS.dwg (5.4 SP RANCH RD DETAILS) - Mar 25 2016 05:29:56 pm PLOTTED BY: karichner

S:\Proj2015\257-02 (Design - South Park Loop Pathway Connector)\Drawings\Layout Drawings\PLANVIEW_CROSSINGS.dwg (WILSON ROAD CROSSING) - Mar 25 2016 05:31:04 pm PLOTTED BY: karlchner DWG FORMAT: 19.1

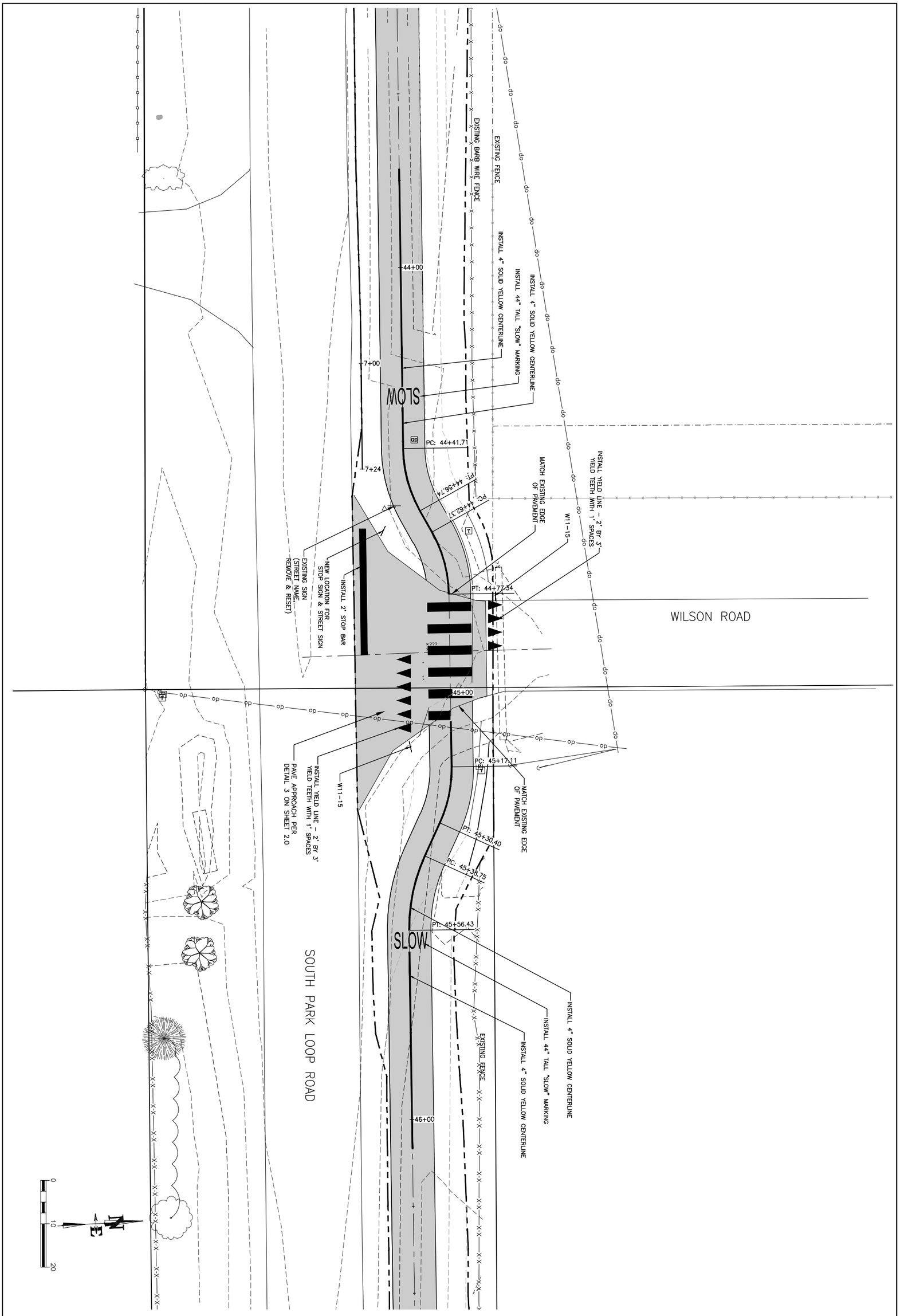

DRAWING NO 5.5	JOB TITLE SOUTH PARK LOOP CONNECTOR PATHWAY PROJECT TETON COUNTY, WY	DRAWING TITLE PLANVIEW OF ROAD CROSSING WILSON ROAD	NELSON ENGINEERING P.O. BOX 1599, JACKSON WYOMING (307) 733-2087	DATE	3/25/16	REV.
JOB NO 15-257-02				SURVEYED	NE	
				ENGINEERED	DD	
				DRAWN	DB	
				CHECKED	DD	
				APPROVED	DD	

S:\Proj2015\257-02 (Design - South Park Loop Pathway Connector)\Drawings\Layout Drawings\PLANVIEW_CROSSINGS.dwg <SPLR AT GRADE X-ING> - Mar 28 2016 08:08:24 am PLOTTED BY: karichner DWG FORMAT: 19.1

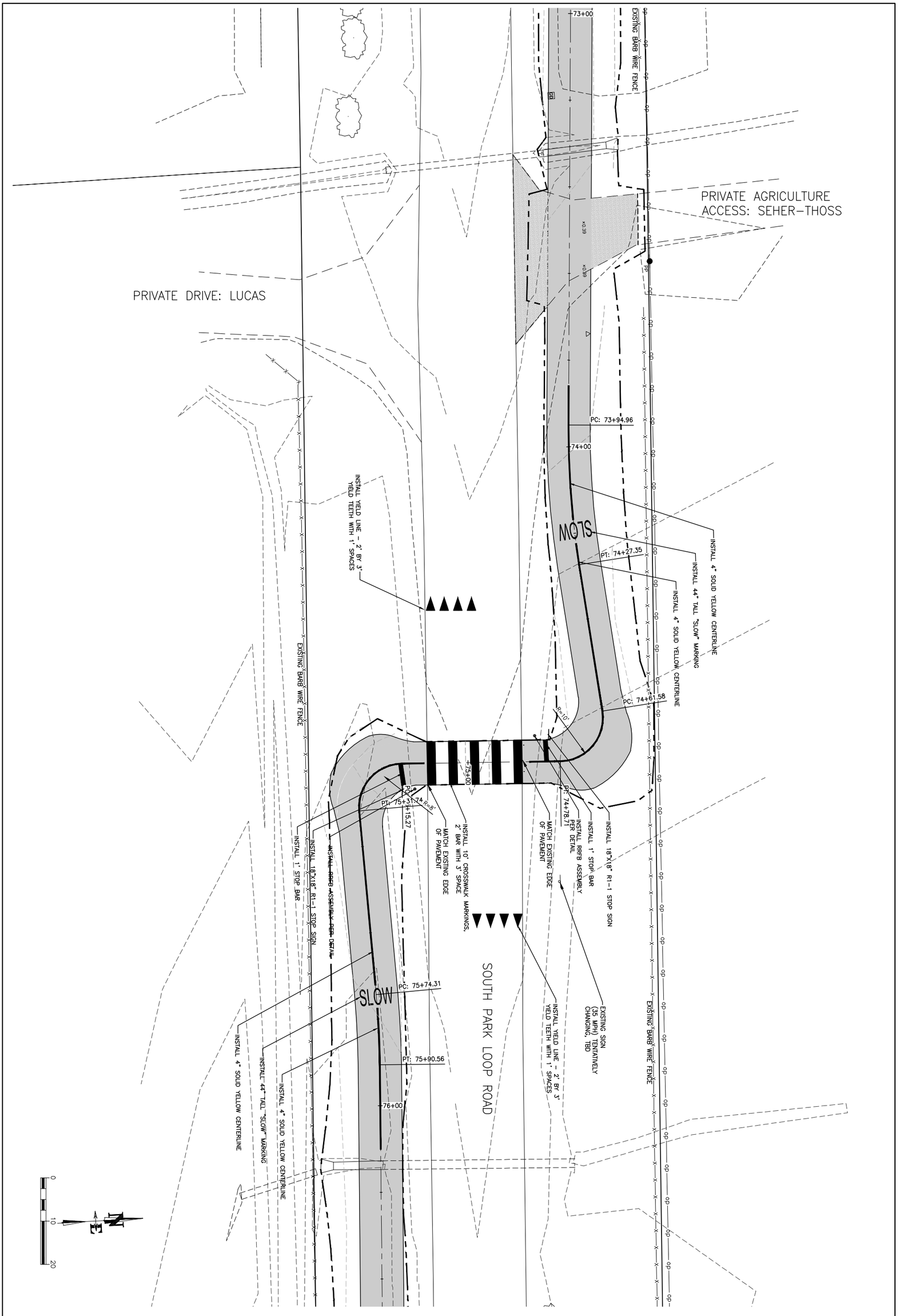

DRAWING NO 5.6	JOB TITLE SOUTH PARK LOOP CONNECTOR PATHWAY PROJECT TETON COUNTY, WY	DRAWING TITLE PLANVIEW OF ROAD CROSSING SOUTHERN SOUTH PARK LOOP ROAD	NELSON ENGINEERING P.O. BOX 1599, JACKSON WYOMING (307) 733-2087	DATE 3/25/16	REV.
JOB NO 15-257-02				SURVEYED NE	
				ENGINEERED DD	
				DRAWN DB	
				CHECKED DD	
				APPROVED DD	

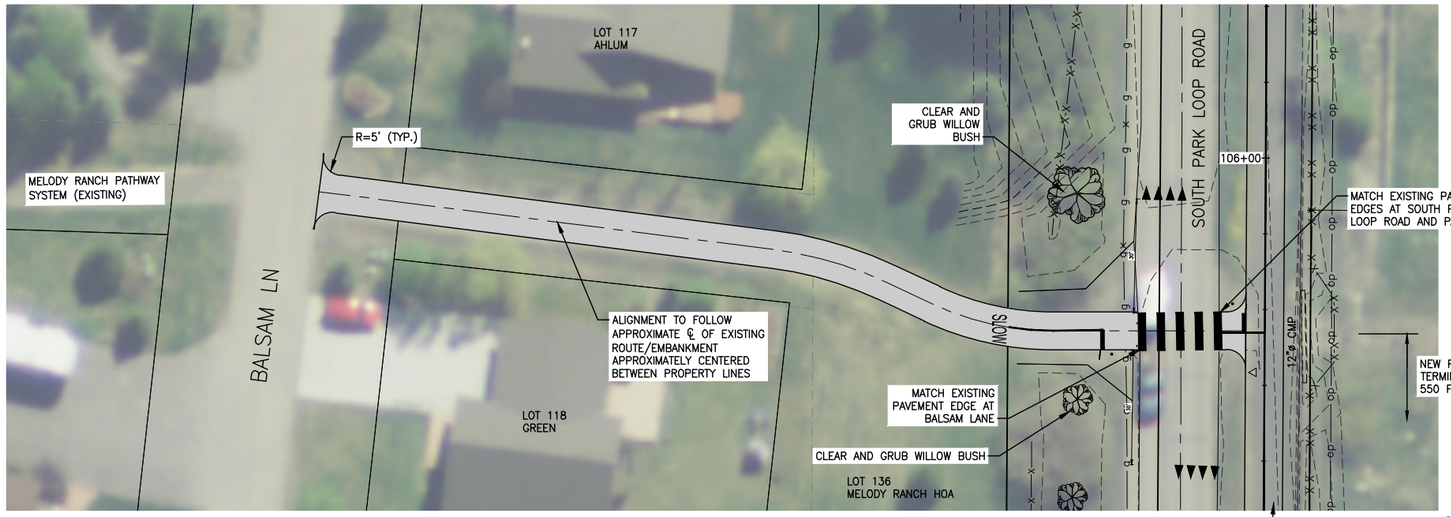

4
2.1 SILT FENCE SECTION DETAIL

N.T.S.

0 20 40

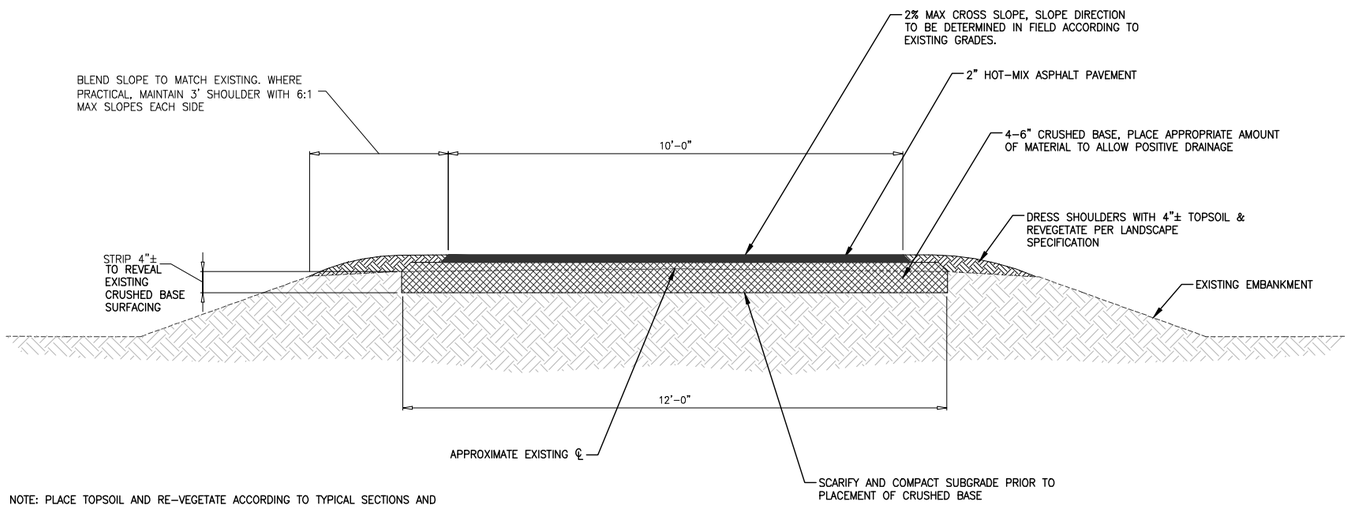

NOTE: PLACE TOPSOIL AND RE-VEGETATE ACCORDING TO TYPICAL SECTIONS AND SPECIFICATIONS IN ALL AREAS WHERE EXISTING GROUND IS DISTURBED

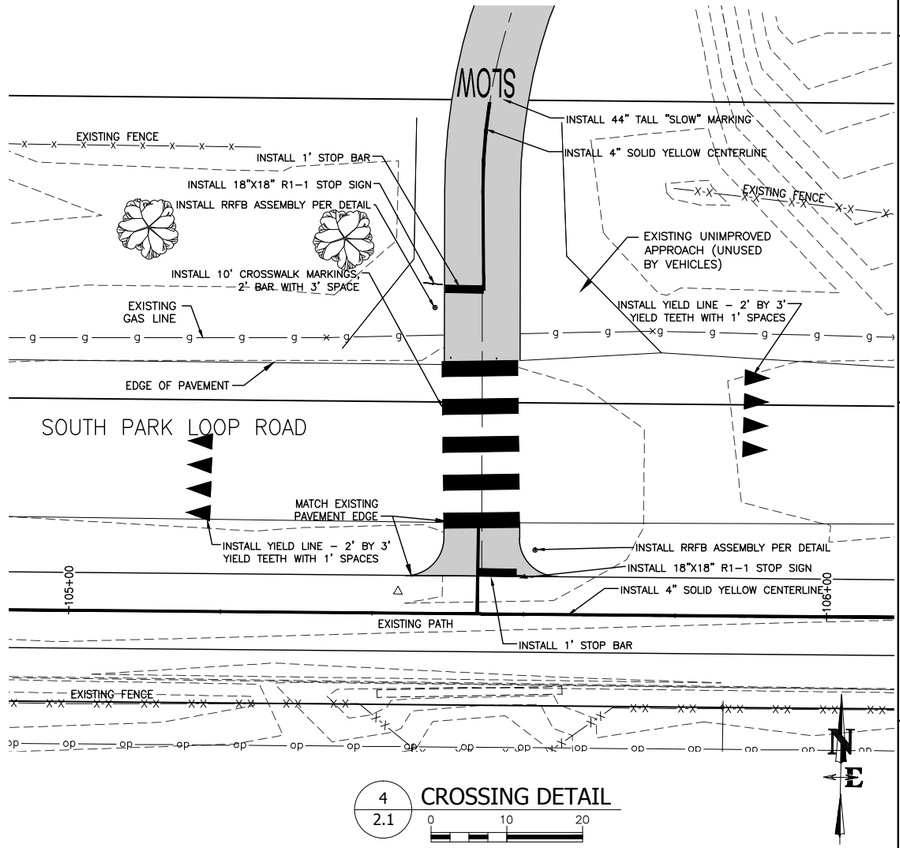

4
2.1 CROSSING DETAIL

0 10 20

CONTRACTOR NOTE:

CAUTION: UNDERGROUND UTILITY LOCATIONS ARE NOT GUARANTEED, NOR IS THERE ANY GUARANTEE THAT ALL EXISTING UTILITIES (WHETHER FUNCTIONAL OR ABANDONED) WITHIN THE PROJECT AREA ARE SHOWN ON THESE DRAWINGS. THE CONTRACTOR SHALL DETERMINE THE EXACT LOCATION OF ALL UNDERGROUND UTILITIES BEFORE STARTING WORK. THE CONTRACTOR SHALL BE RESPONSIBLE FOR ALL DAMAGE RESULTING FROM CONTRACTORS WORK.

REV.		
	3/25/16	
DATE	NE	SURVEYED
	DD	ENGINEERED
	DB	DRAWN
	DD	CHECKED
	DD	APPROVED

NELSON ENGINEERING
P.O. BOX 1599, JACKSON WYOMING (307) 733-2087

DRAWING TITLE
PLAN DETAIL VIEW
MELODY RANCH SUBDIVISION CONNECTION

JOB TITLE
SOUTH PARK LOOP
CONNECTOR PATHWAY PROJECT
TETON COUNTY, WY

DRAWING NO 5.7

JOB NO 15-257-02

S:\Proj\2015\257-02 (Design - South Park Loop Pathway Connector)\Drawings\Layout Drawings\MELODY CONNECTION.dwg (MELODY CROSSING - Mar 25, 2016 05:32:26 pm PLOTTED BY: kwirkner DWG FORMAT: 151

S:\Proj2015\257-02 (Design - South Park Loop Pathway Connector)\Drawings\Align & Grading.dwg (Section Sheet - 1) - Mar 25 2016 034904 pm PLOTTED BY: korichner DWG FORMAT: 191

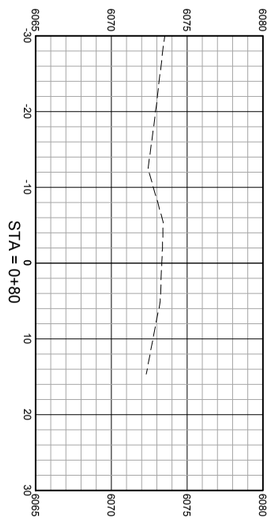

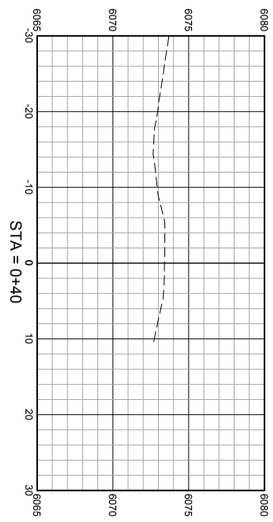

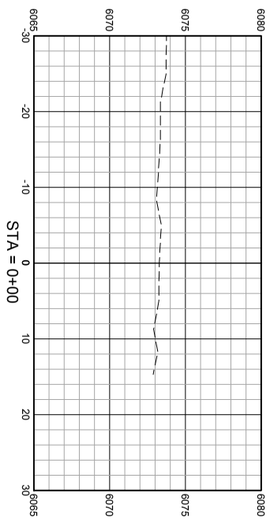

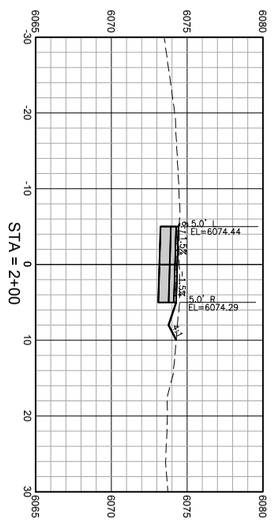

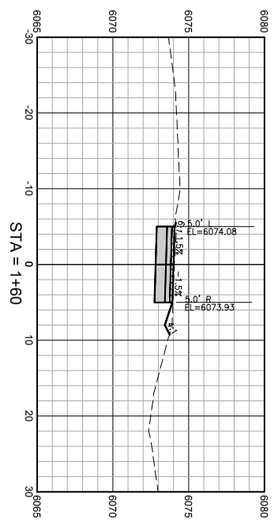

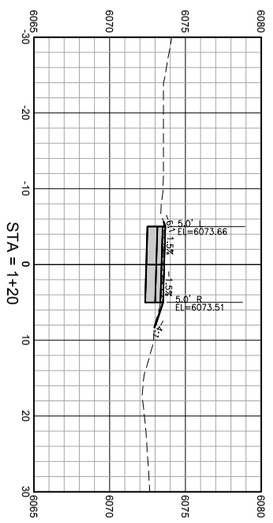

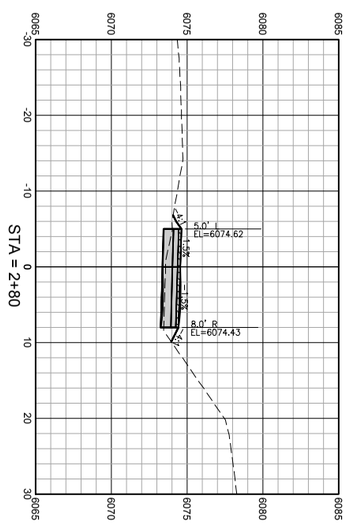

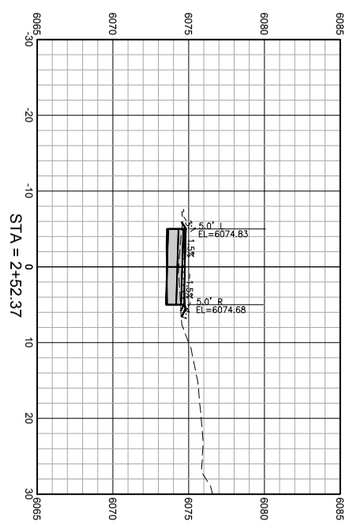

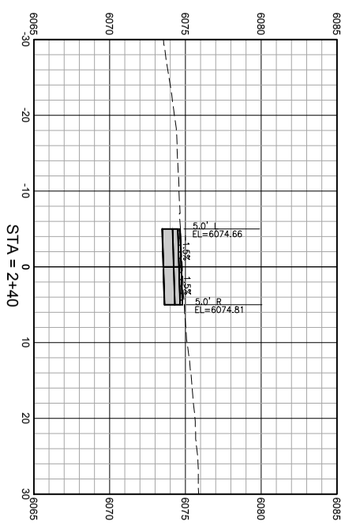

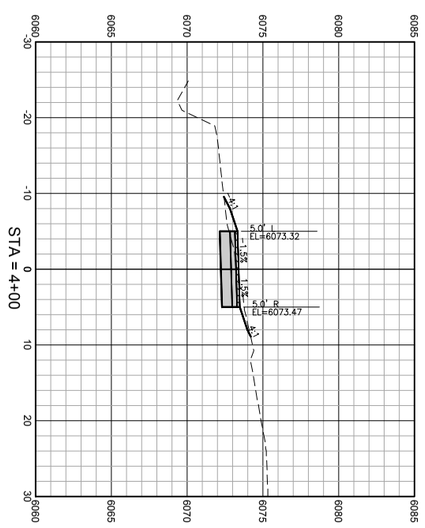

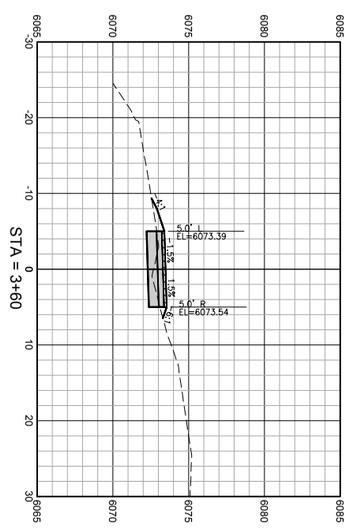

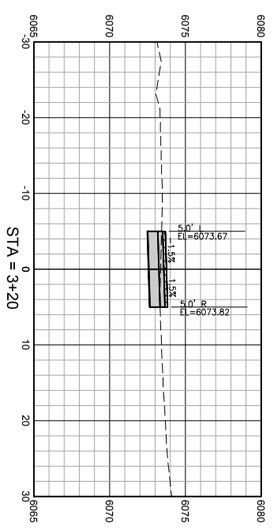

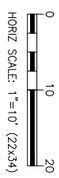

DRAWING NO: X1	JOB TITLE: SOUTH PARK LOOP CONNECTOR PATHWAY PROJECT TETON COUNTY, WY	DRAWING TITLE: CROSS SECTIONS	NELSON ENGINEERING P.O. BOX 1599, JACKSON WYOMING (307) 733-2087	DATE: 3/25/16	REV.
JOB NO: 15-257-02				SURVEYED: NE	
				ENGINEERED: DD	
				DRAWN: DB	
				CHECKED: DD	
				APPROVED: DD	

S:\Proj2015\257-02 (Design - South Park Loop Pathway Connector)\Drawings\Align & Grading.dwg (Section Sheet - 2) - Mar 25 2016 034916 pm PLOTTED BY: korichner DWG FORMAT: 191

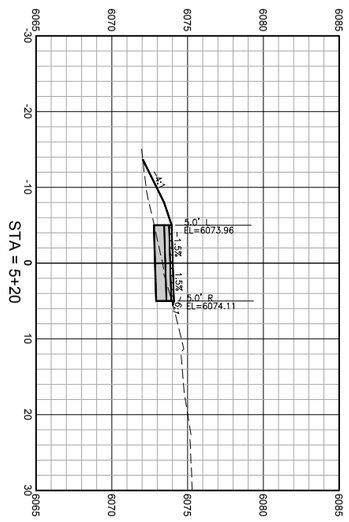

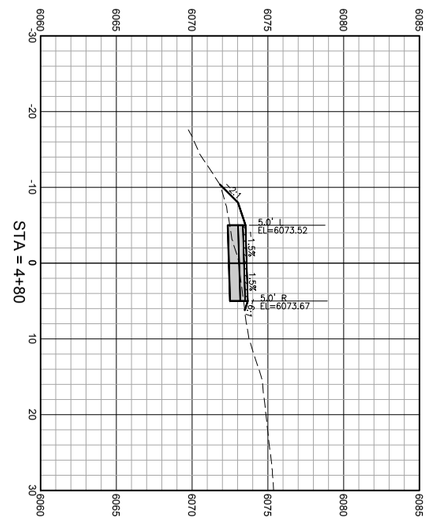

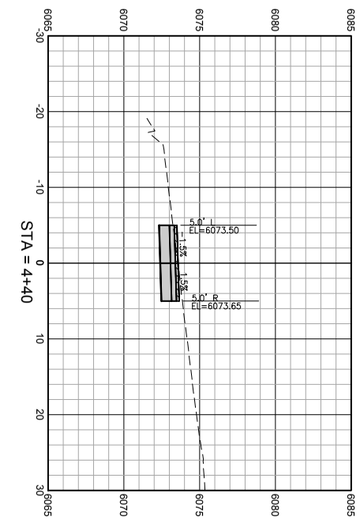

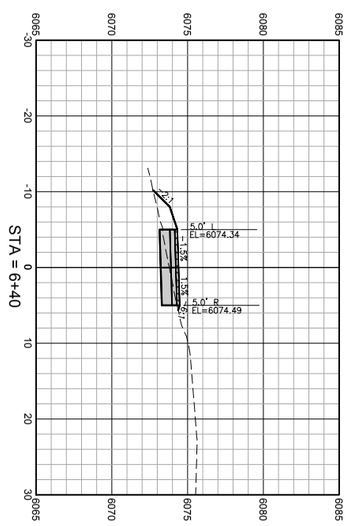

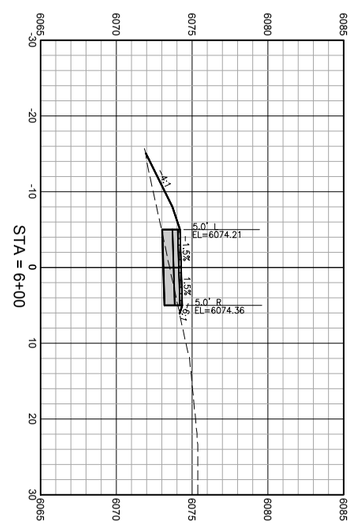

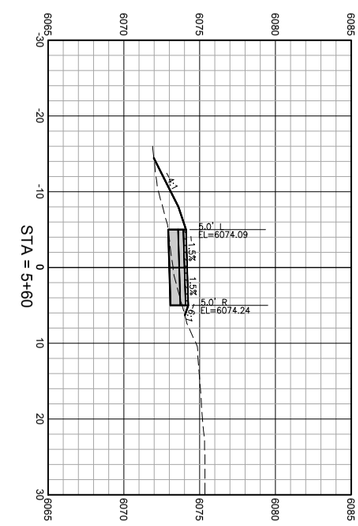

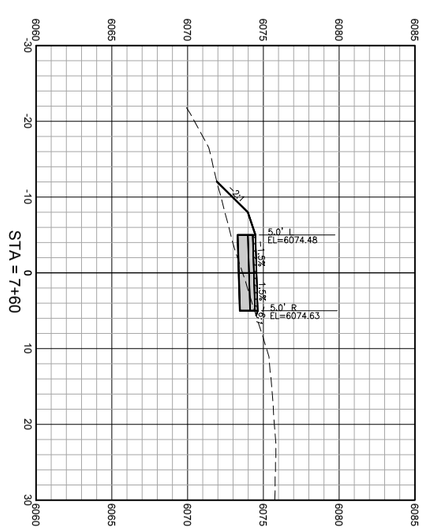

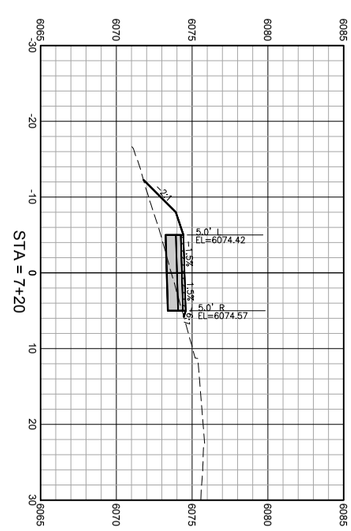

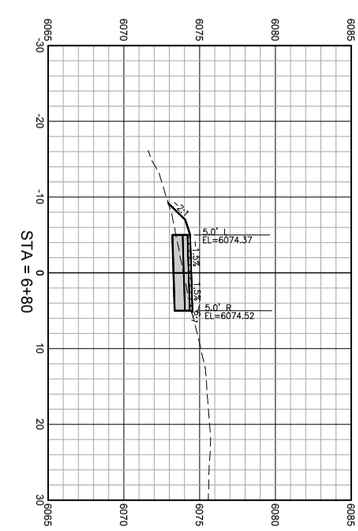

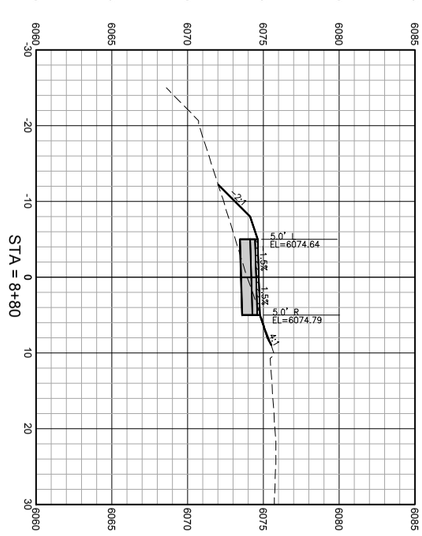

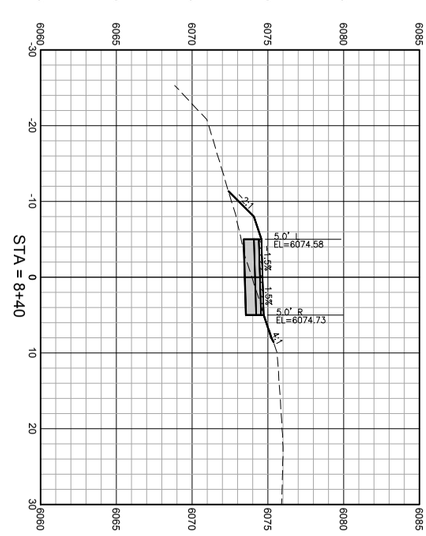

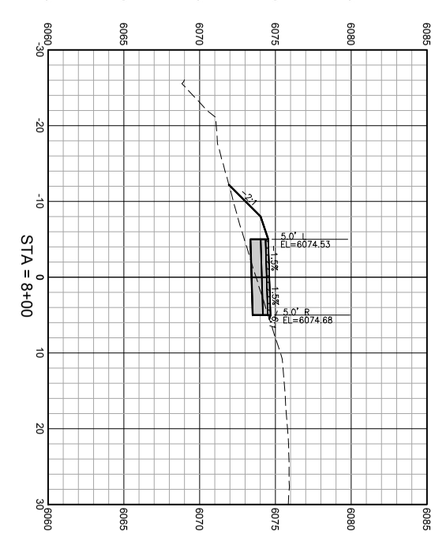

HORIZ SCALE: 1"=10' (22x34)

DRAWING NO: X2	JOB TITLE: SOUTH PARK LOOP CONNECTOR PATHWAY PROJECT TETON COUNTY, WY	DRAWING TITLE: CROSS SECTIONS	NELSON ENGINEERING P.O. BOX 1599, JACKSON WYOMING (307) 733-2087	DATE: 3/25/16	REV.
JOB NO: 15-257-02				SURVEYED: NE	
				ENGINEERED: DD	
				DRAWN: DB	
				CHECKED: DD	
				APPROVED: DD	

S:\Proj2015\257-02 (Design - South Park Loop Pathway Connector)\Drawings\Align & Grading.dwg (Section Sheet - 3) - Mar 25 2016 034926 pm PLOTTED BY: kerichner DWG FORMAT: 19.1

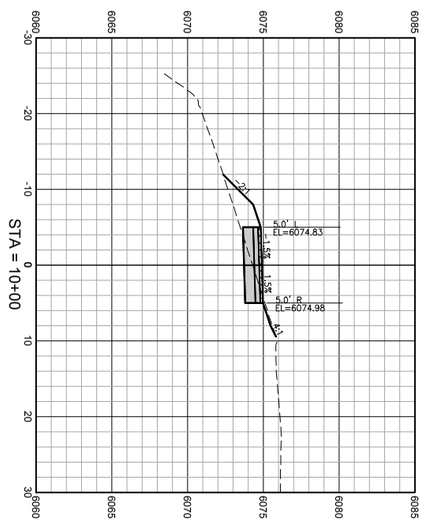

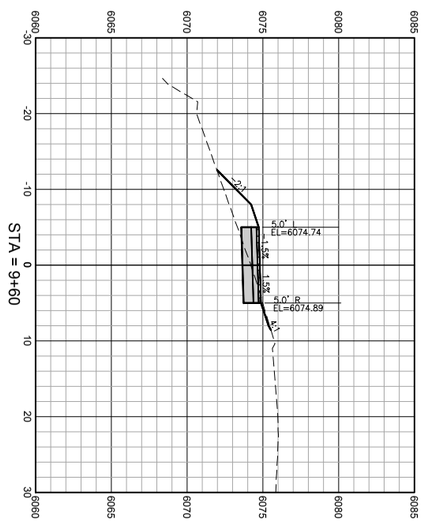

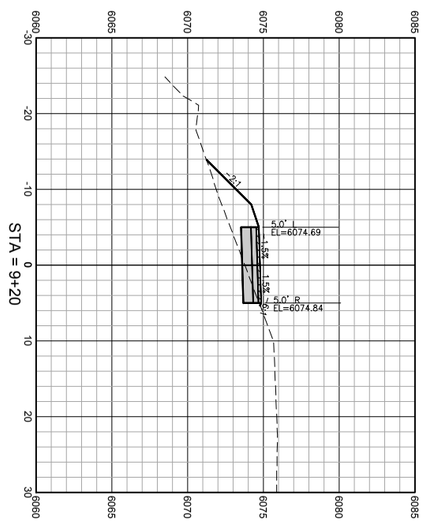

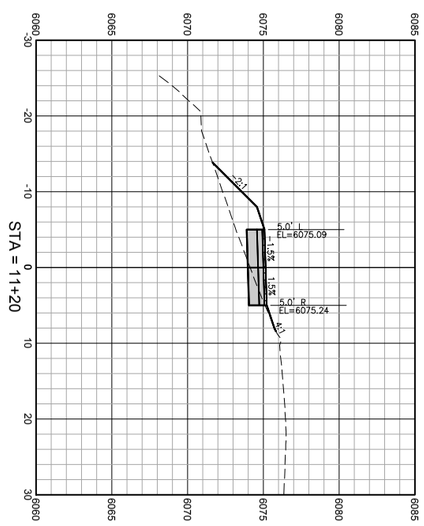

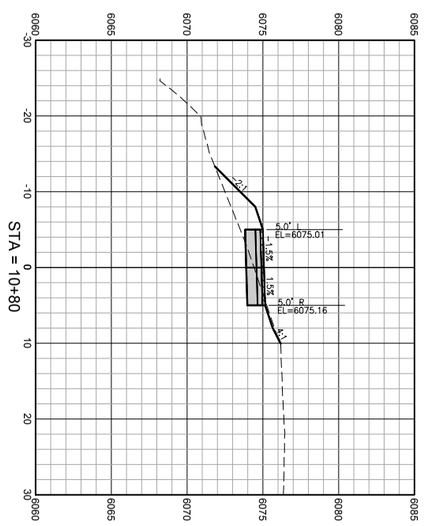

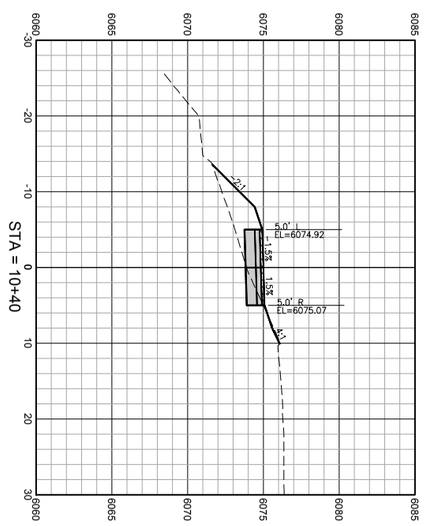

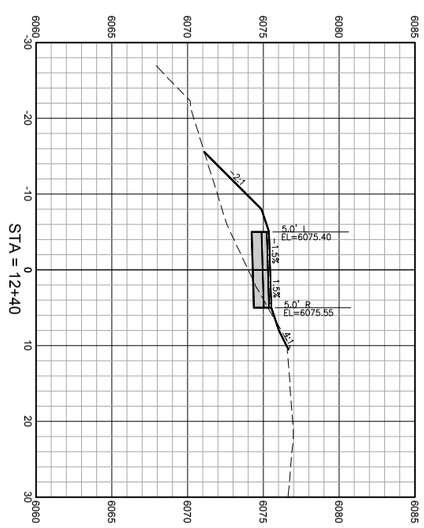

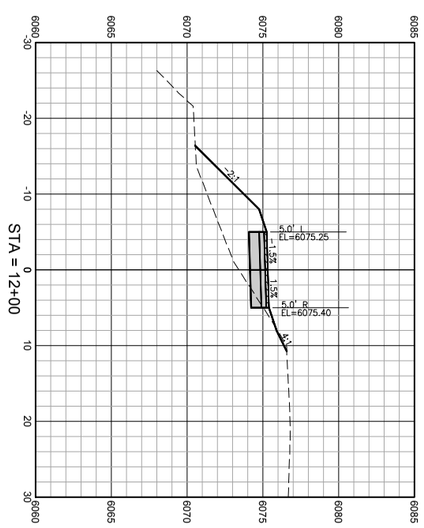

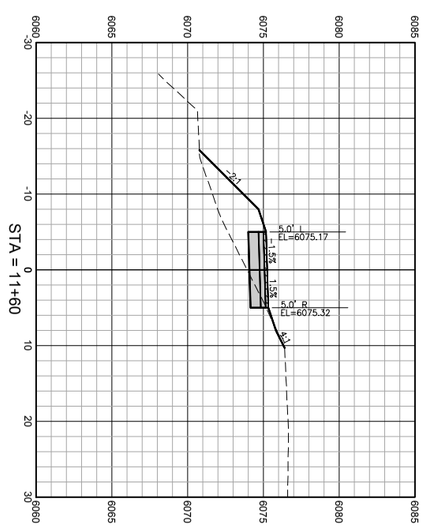

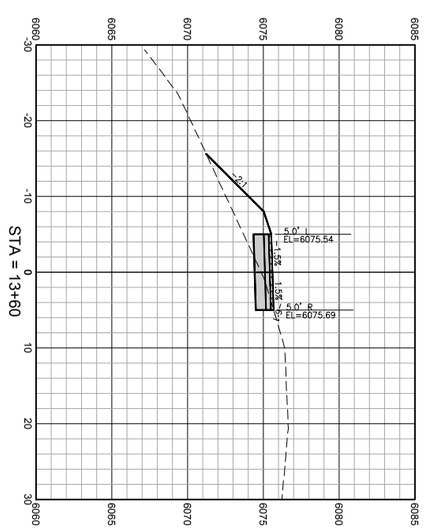

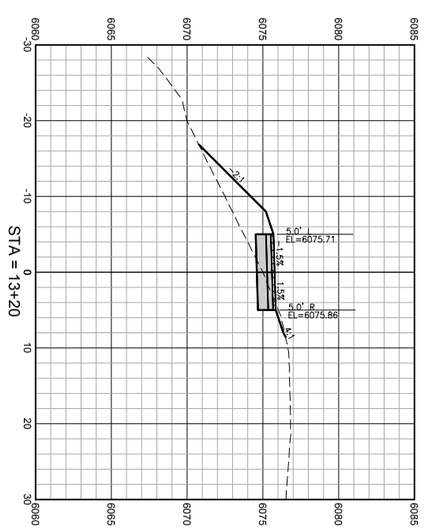

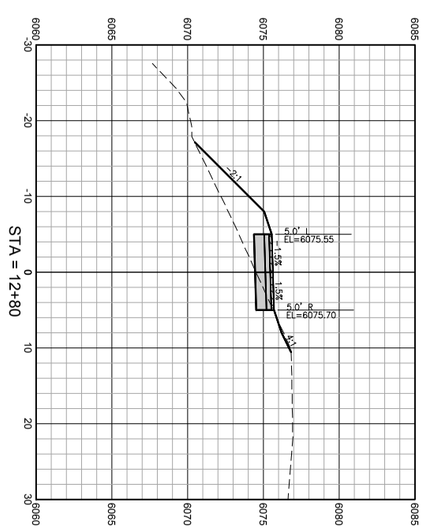

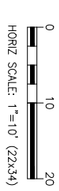

DRAWING NO: X3	JOB TITLE: SOUTH PARK LOOP CONNECTOR PATHWAY PROJECT TETON COUNTY, WY	DRAWING TITLE: CROSS SECTIONS	NELSON ENGINEERING P.O. BOX 1599, JACKSON WYOMING (307) 733-2087	DATE: 3/25/16	REV.
JOB NO: 15-257-02				SURVEYED: NE	
				ENGINEERED: DD	
				DRAWN: DB	
				CHECKED: DD	
				APPROVED: DD	

S:\Proj2015\257-02 (Design - South Park Loop Pathway Connector)\Drawings\Align & Grading.dwg (Section Sheet - 4) - Mar 25 2016 03:49:36 pm PLOTTED BY: kschirmer DWG FORMAT: 19.1

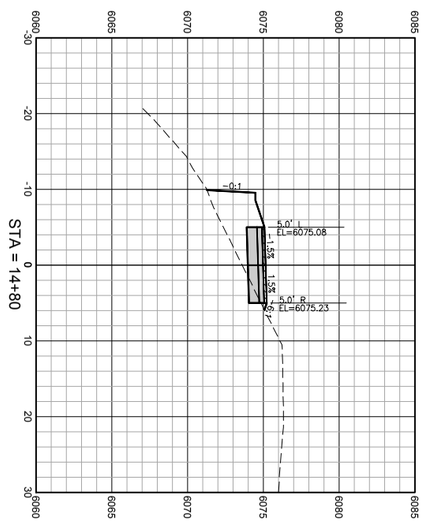

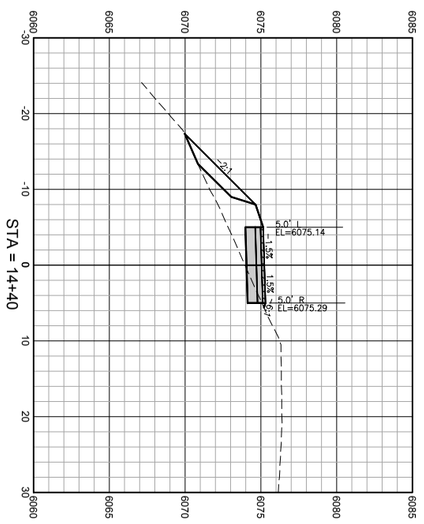

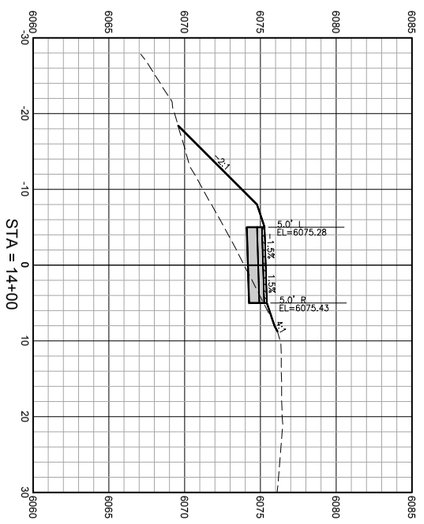

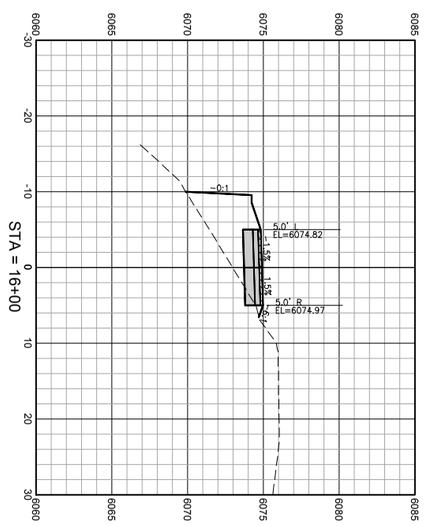

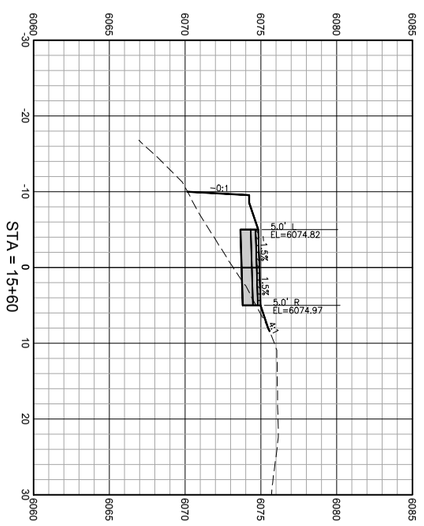

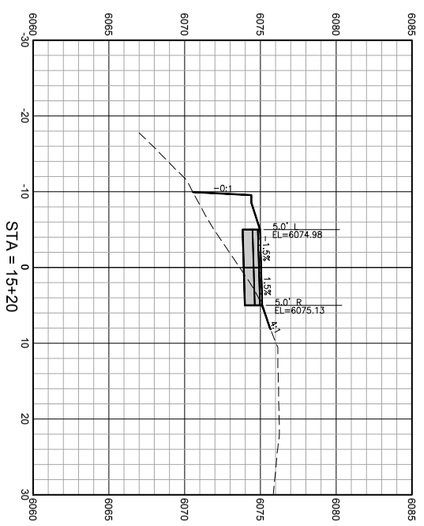

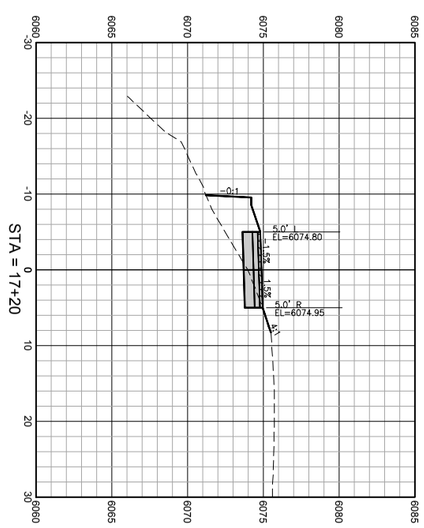

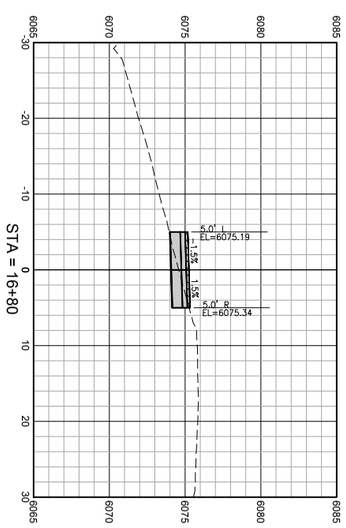

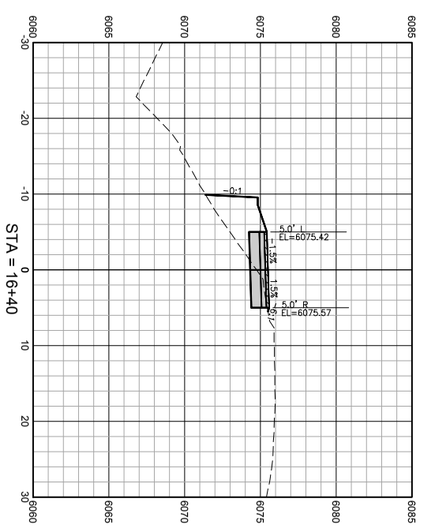

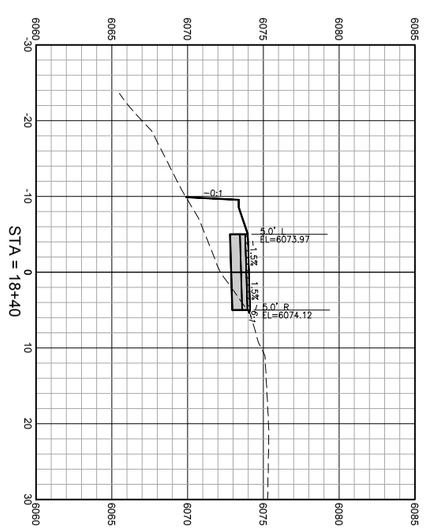

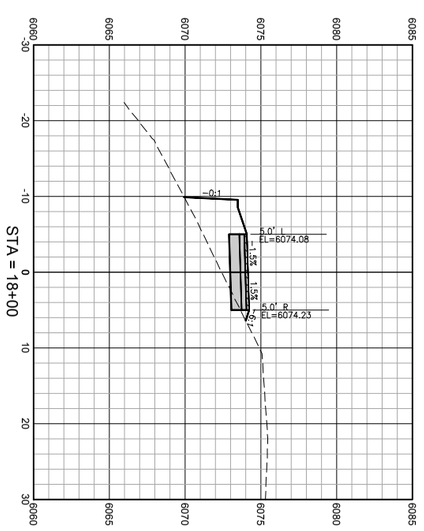

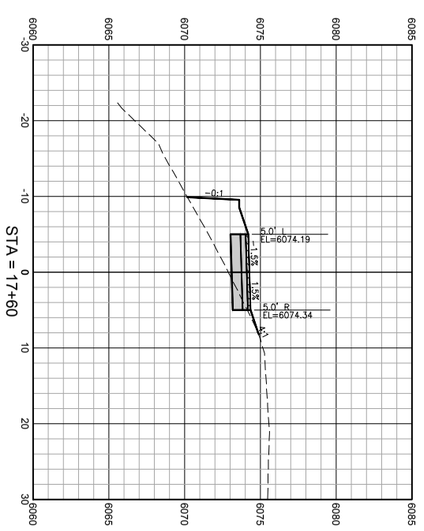

HORIZ SCALE: 1"=10' (22x34)

DRAWING NO: X4	JOB TITLE: SOUTH PARK LOOP CONNECTOR PATHWAY PROJECT TETON COUNTY, WY	DRAWING TITLE: CROSS SECTIONS	NELSON ENGINEERING P.O. BOX 1599, JACKSON WYOMING (307) 733-2087	DATE: 3/25/16	REV.
JOB NO: 15-257-02				SURVEYED: NE	
				ENGINEERED: DD	
				DRAWN: DB	
				CHECKED: DD	
				APPROVED: DD	

S:\Proj2015\257-02 (Design - South Park Loop Pathway Connector)\Drawings\Align & Grading.dwg (Section Sheet - S) - Mar 25 2016 03:49:46 pm PLOTTED BY: kerichner DWG FORMAT: 19.1

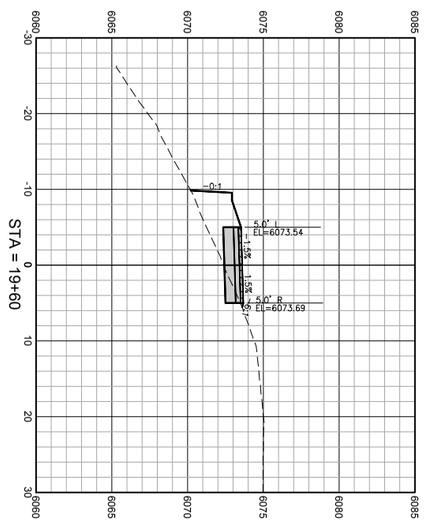

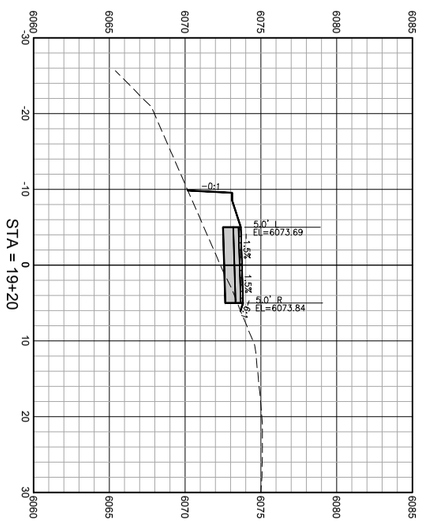

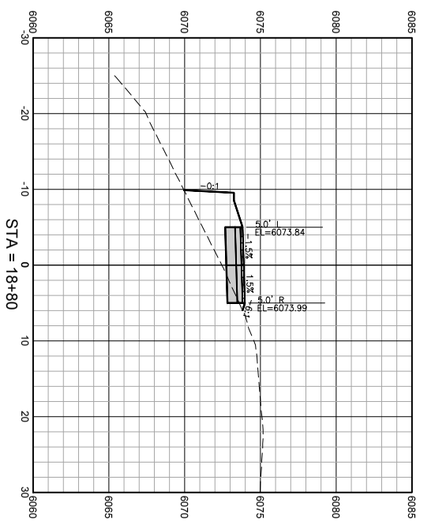

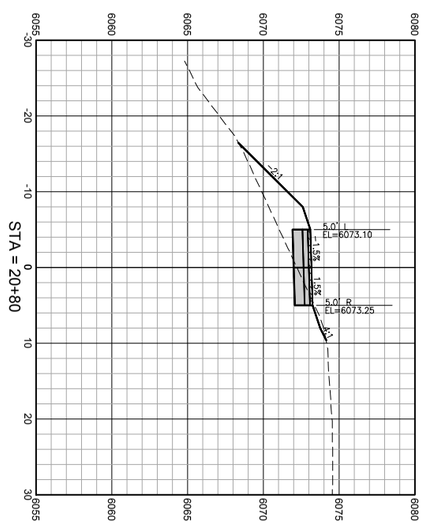

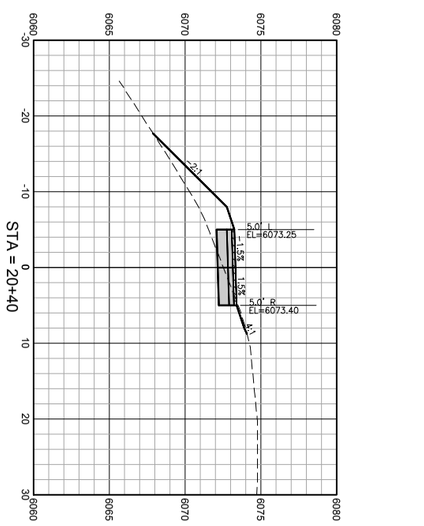

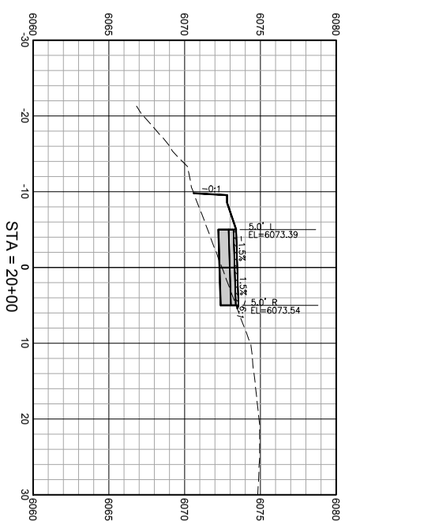

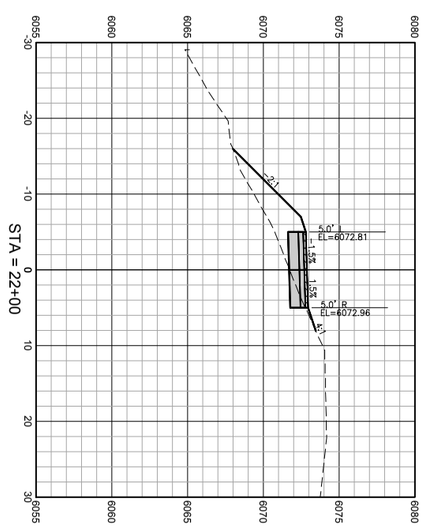

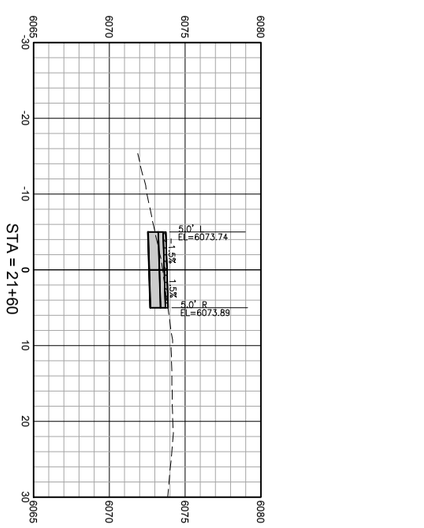

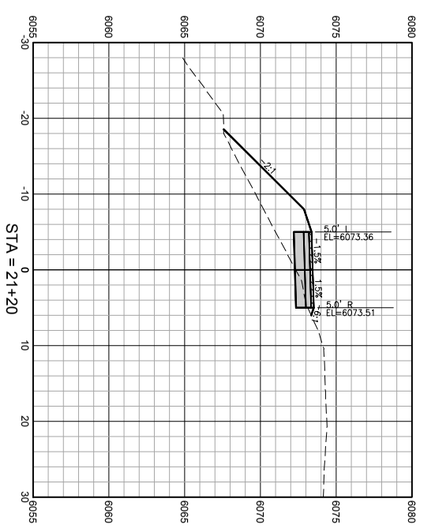

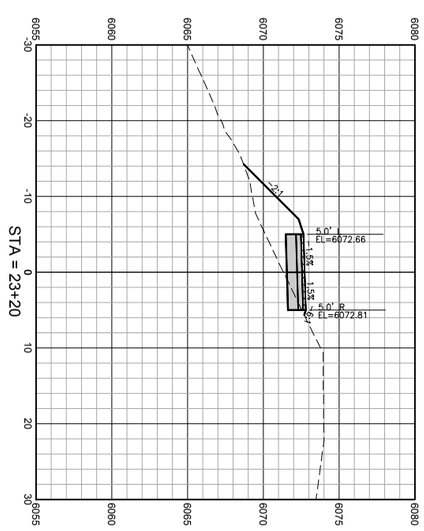

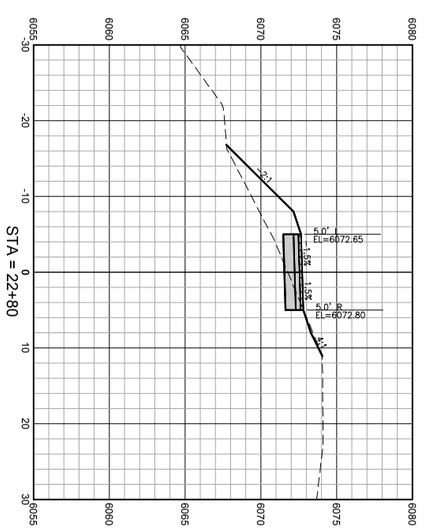

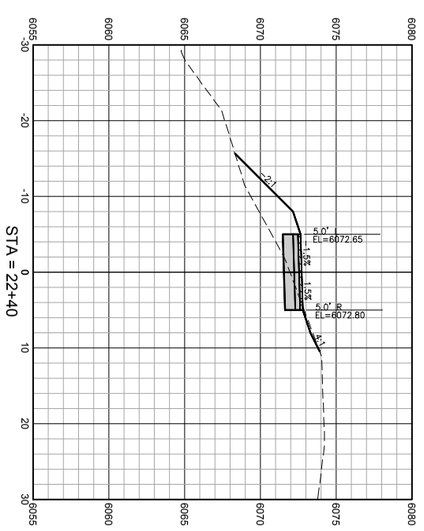

HORIZ SCALE: 1"=10' (22x34)

DRAWING NO: X5	JOB TITLE: SOUTH PARK LOOP CONNECTOR PATHWAY PROJECT TETON COUNTY, WY	DRAWING TITLE: CROSS SECTIONS	NELSON ENGINEERING P.O. BOX 1599, JACKSON WYOMING (307) 733-2087	DATE: 3/25/16	REV.
JOB NO: 15-257-02				SURVEYED: NE	
				ENGINEERED: DD	
				DRAWN: DB	
				CHECKED: DD	
				APPROVED: DD	

S:\Proj2015\257-02 (Design - South Park Loop Pathway Connector)\Drawings\Align & Grading.dwg (Section Sheet - 6) - Mar 25 2016 03:49:56 pm PLOTTED BY: kerichner DWG FORMAT: 19.1

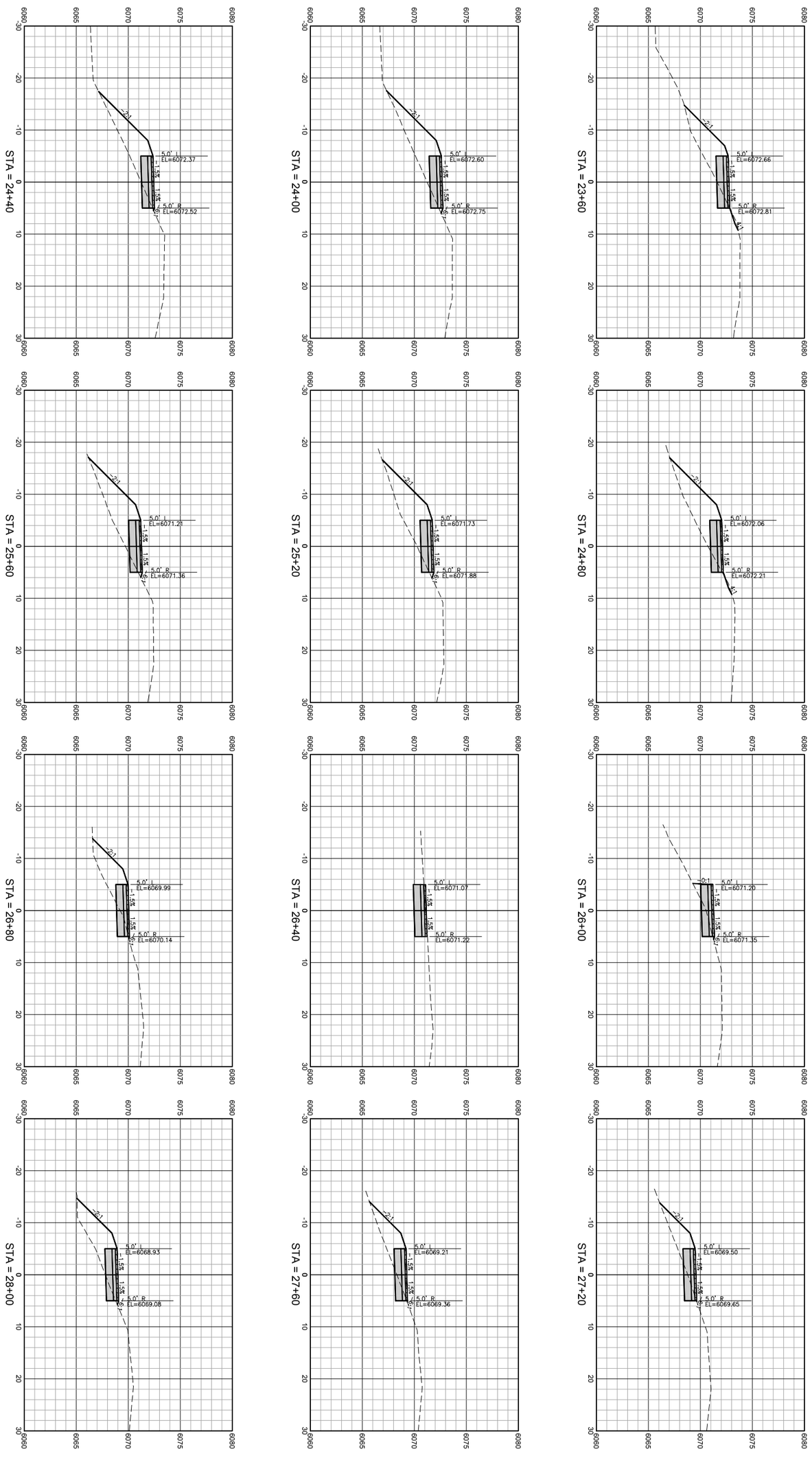

HORIZ SCALE: 1"=10' (22x34)

0 10 20

DRAWING NO: X6	JOB TITLE: SOUTH PARK LOOP CONNECTOR PATHWAY PROJECT TETON COUNTY, WY	DRAWING TITLE: CROSS SECTIONS	NELSON ENGINEERING P.O. BOX 1599, JACKSON WYOMING (307) 733-2087	DATE: 3/25/16	REV.
JOB NO: 15-257-02				SURVEYED: NE	
				ENGINEERED: DD	
				DRAWN: DB	
				CHECKED: DD	
				APPROVED: DD	

S:\Proj2015\257-02 (Design - South Park Loop Pathway Connector)\Drawings\Align & Grading.dwg (Section Sheet - 7) - Mar 25 2016 03:30:06 pm PLOTTED BY: korichner DWG FORMAT: 19.1

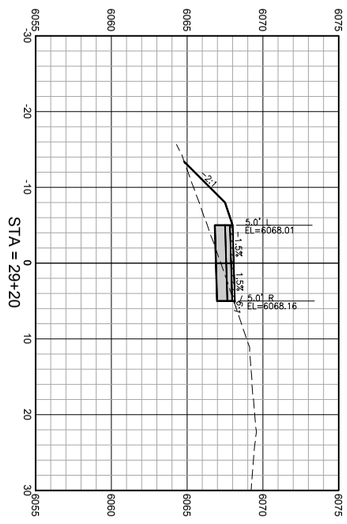

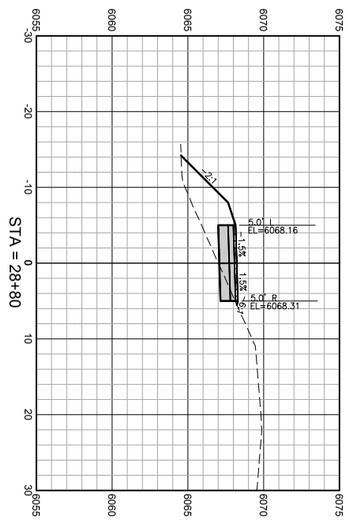

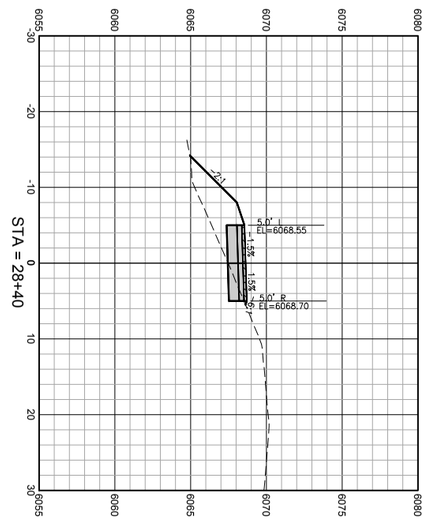

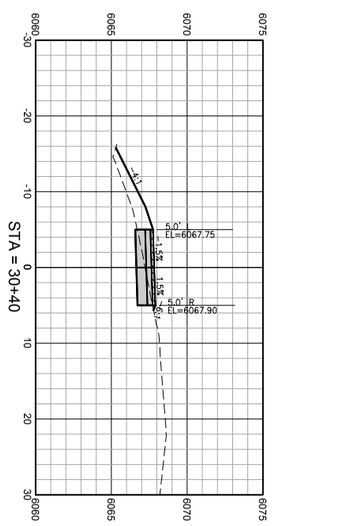

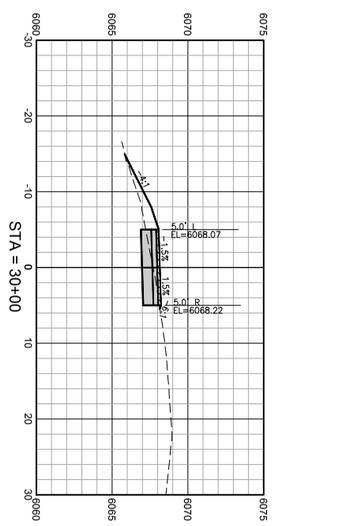

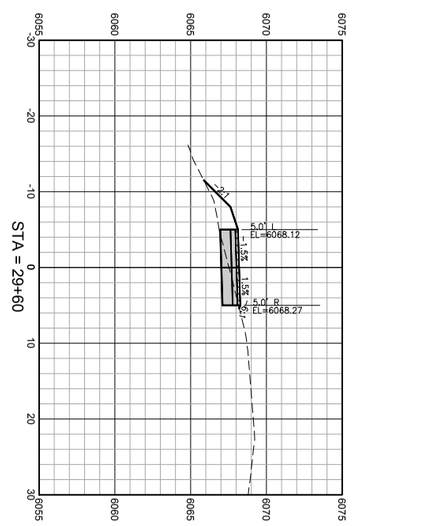

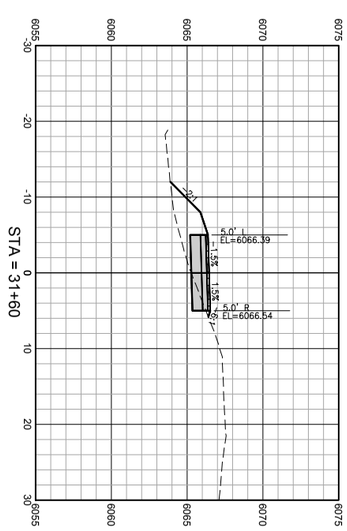

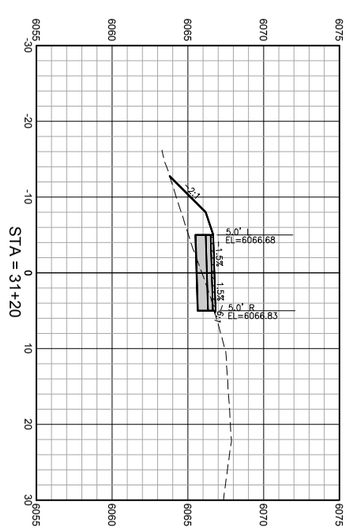

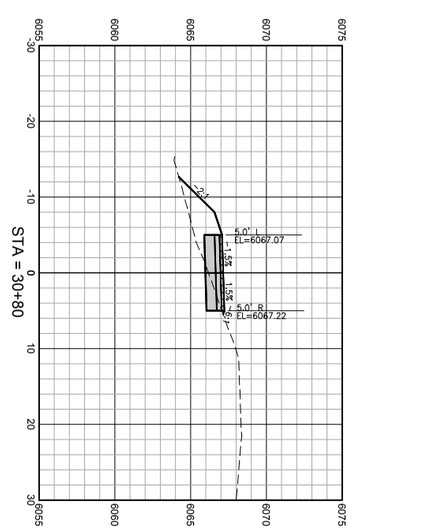

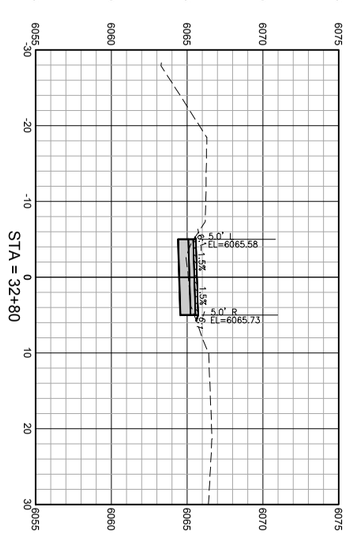

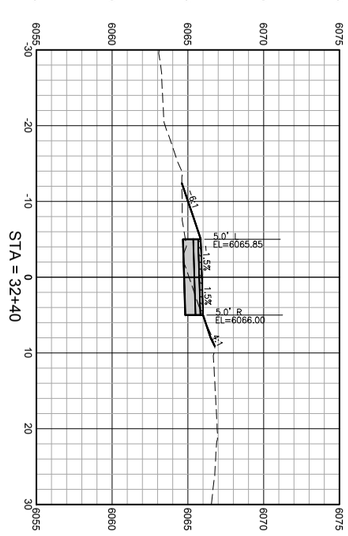

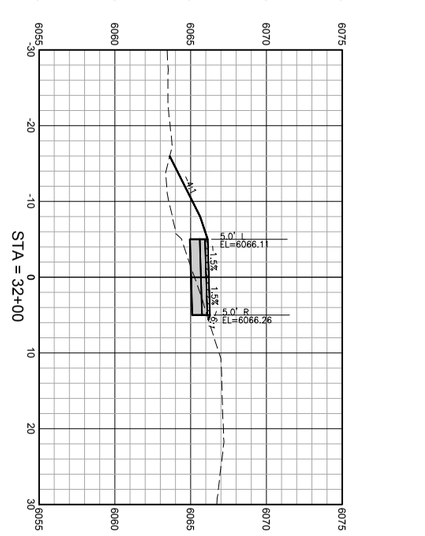

HORIZ SCALE: 1"=10' (22x34)

DRAWING NO	JOB TITLE	DRAWING TITLE		DATE	3/25/16	REV.
X7	SOUTH PARK LOOP	CROSS SECTIONS	NELSON ENGINEERING	SURVEYED	NE	
JOB NO	CONNECTOR PATHWAY PROJECT		P.O. BOX 1599, JACKSON WYOMING (307) 733-2087	ENGINEERED	DD	
15-257-02	TETON COUNTY, WY			DRAWN	DB	
				CHECKED	DD	
				APPROVED	DD	

S:\Proj2015\257-02 (Design - South Park Loop Pathway Connector)\Drawings\Align & Grading.dwg (Section Sheet - 8) - Mar 25 2016 03:30:16 pm PLOTTED BY: korichner DWG FORMAT: 191

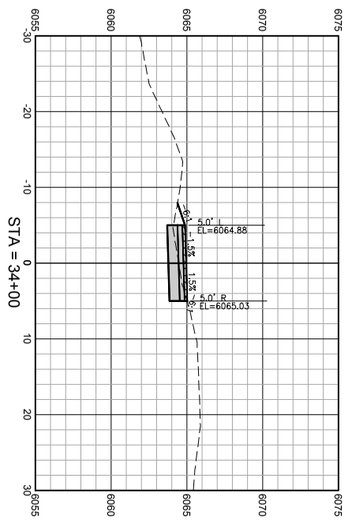

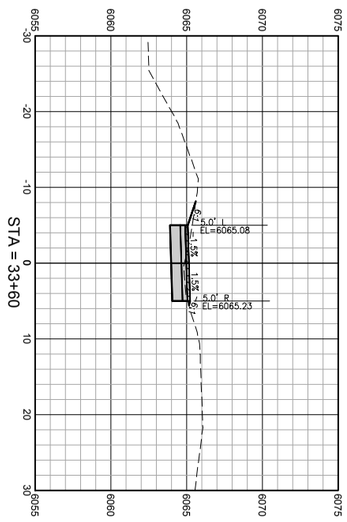

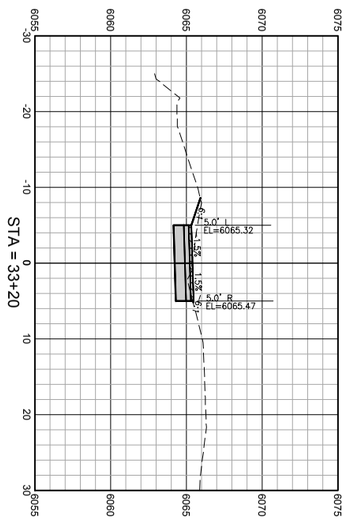

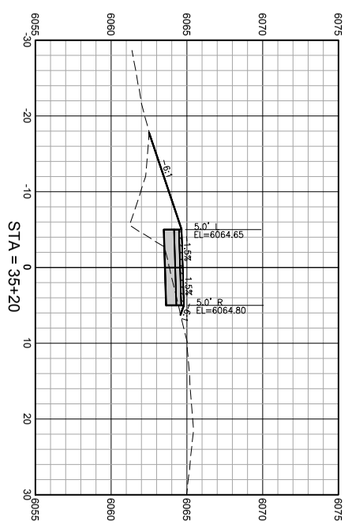

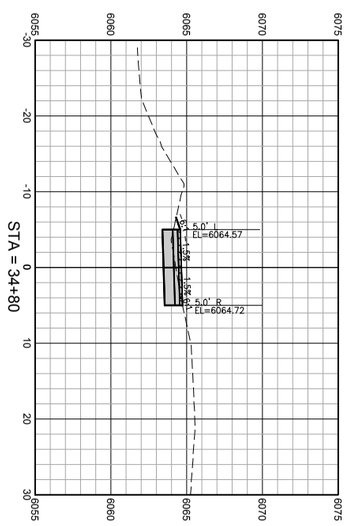

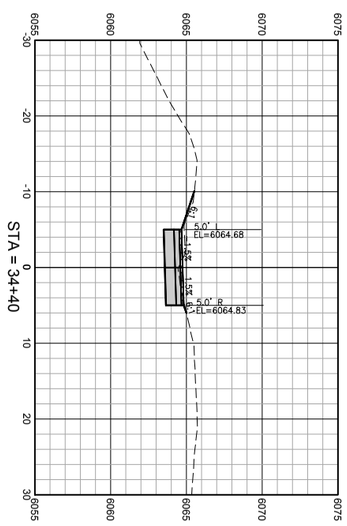

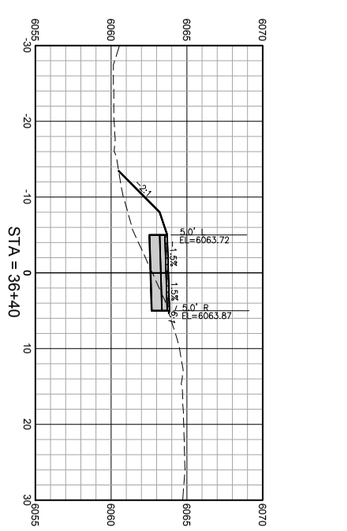

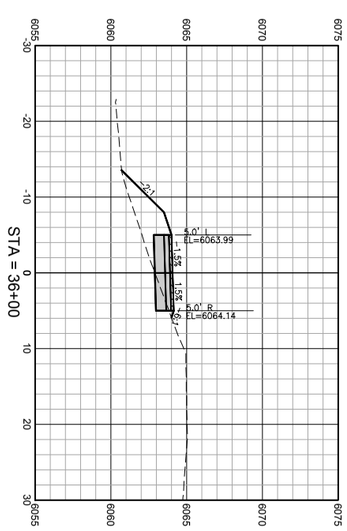

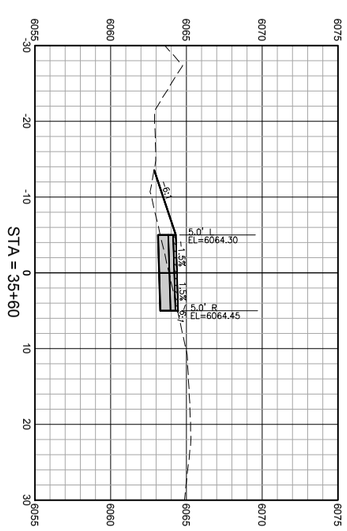

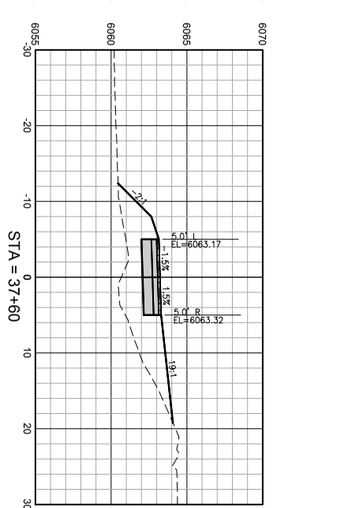

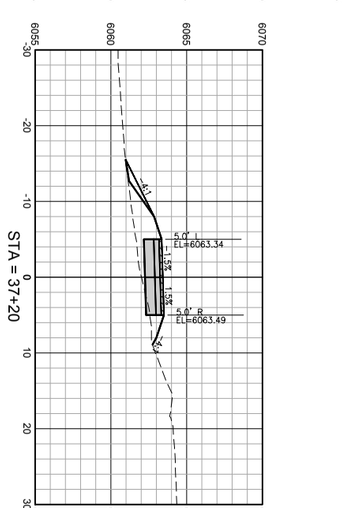

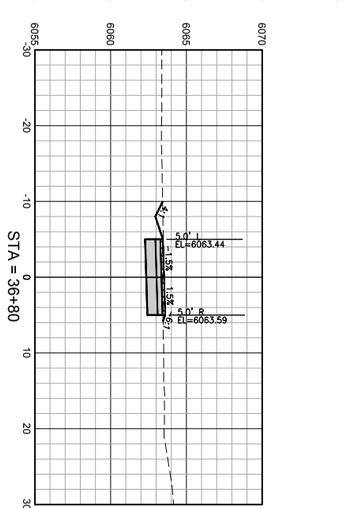

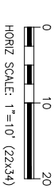

DRAWING NO: X8	JOB TITLE: SOUTH PARK LOOP CONNECTOR PATHWAY PROJECT TETON COUNTY, WY	DRAWING TITLE: CROSS SECTIONS	NELSON ENGINEERING P.O. BOX 1599, JACKSON WYOMING (307) 733-2087	DATE: 3/25/16	REV.
JOB NO: 15-257-02				SURVEYED: NE	
				ENGINEERED: DD	
				DRAWN: DB	
				CHECKED: DD	
				APPROVED: DD	

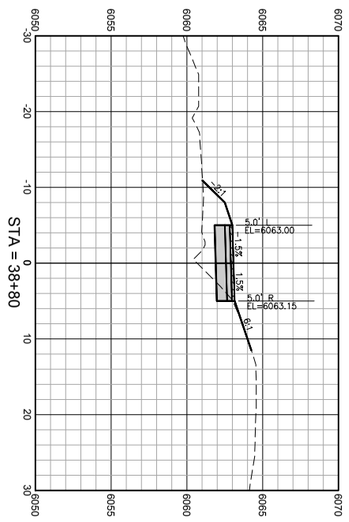

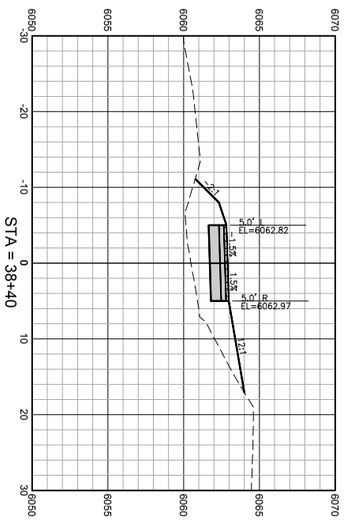

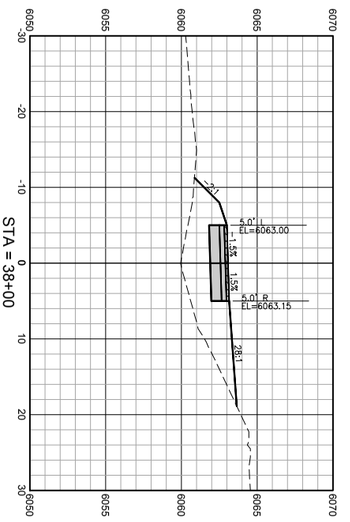

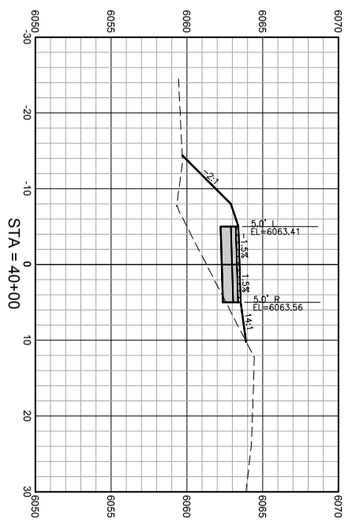

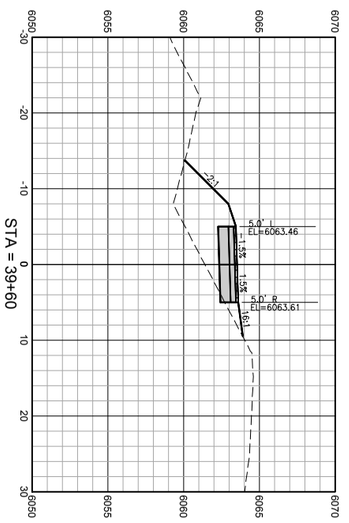

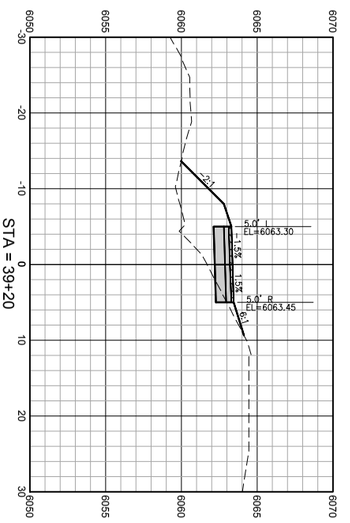

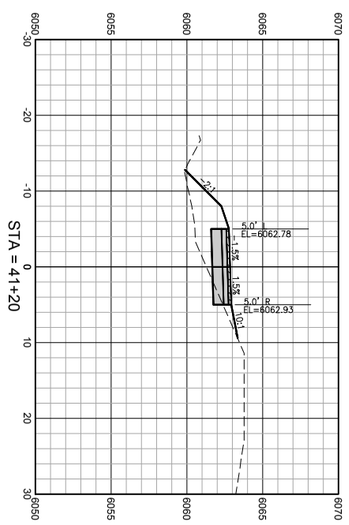

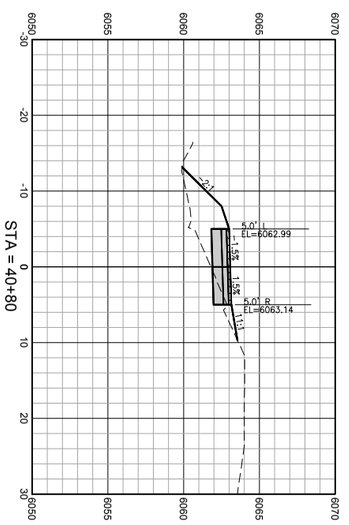

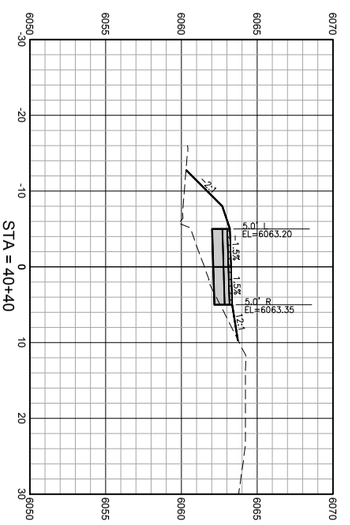

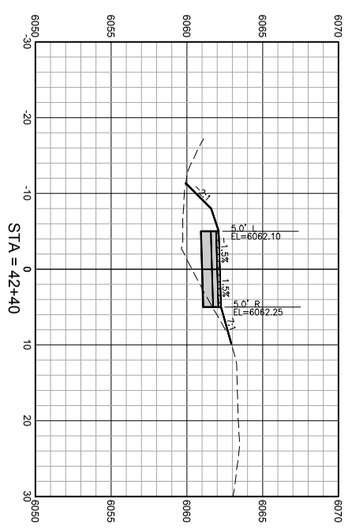

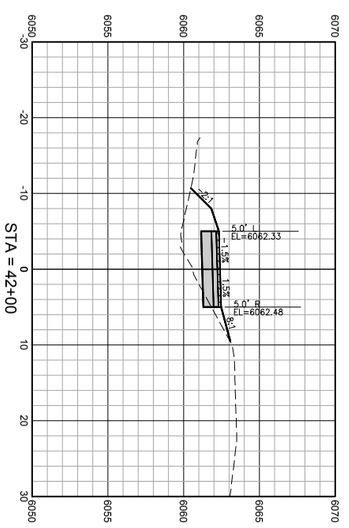

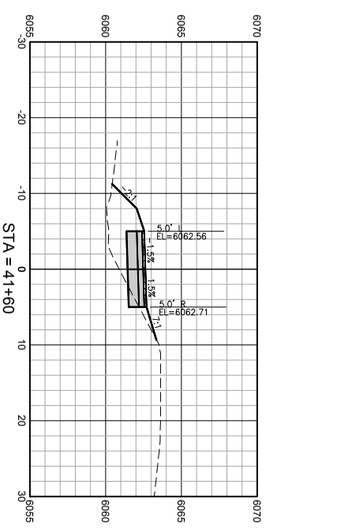

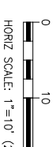

DRAWING NO: X9	JOB TITLE: SOUTH PARK LOOP CONNECTOR PATHWAY PROJECT TETON COUNTY, WY	DRAWING TITLE: CROSS SECTIONS	NELSON ENGINEERING P.O. BOX 1599, JACKSON WYOMING (307) 733-2087	DATE: 3/25/16	REV.
JOB NO: 15-257-02				SURVEYED: NE	
				ENGINEERED: DD	
				DRAWN: DB	
				CHECKED: DD	
				APPROVED: DD	

S:\Proj2015\257-02 (Design - South Park Loop Pathway Connector)\Drawings\Align & Grading.dwg <Section Sheet - 10> - Mar 25 2016 03:50:36 pm PLOTTED BY: karlchner DWG FORMAT: 19]

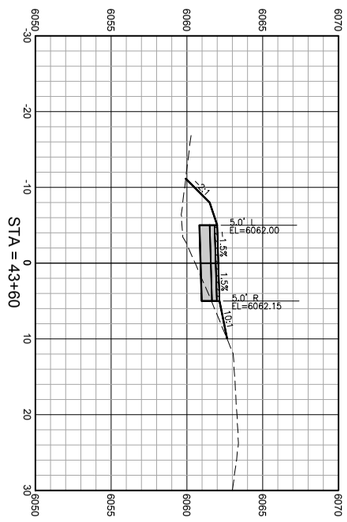

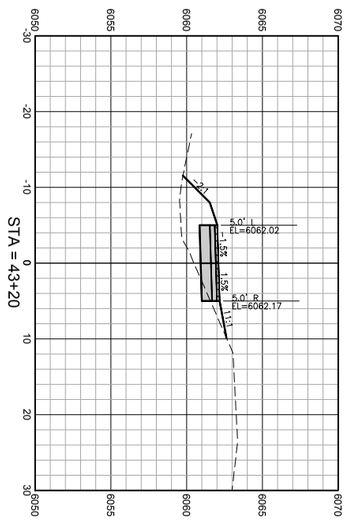

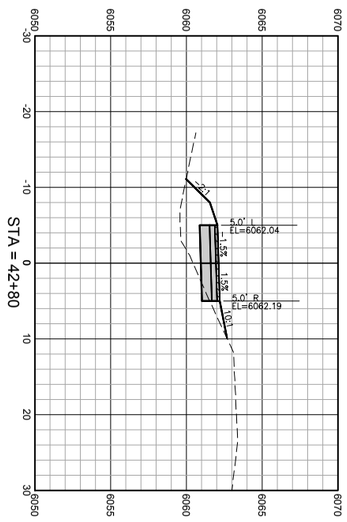

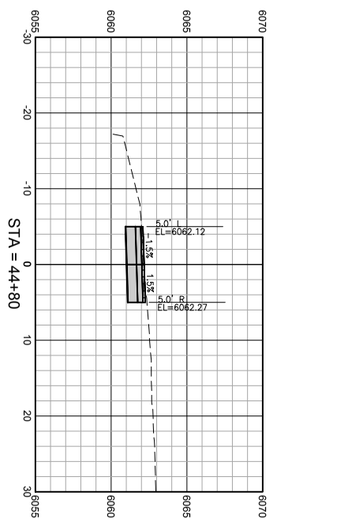

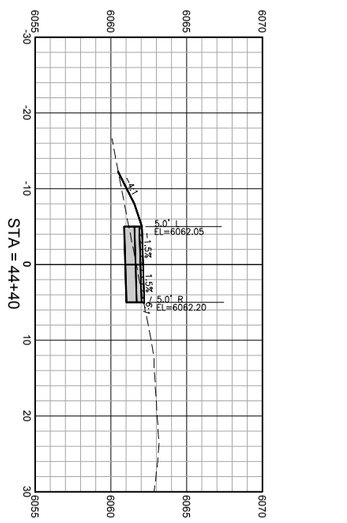

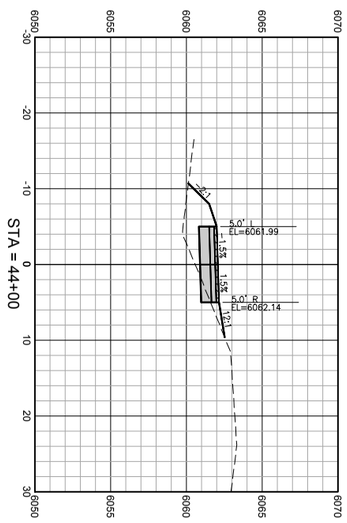

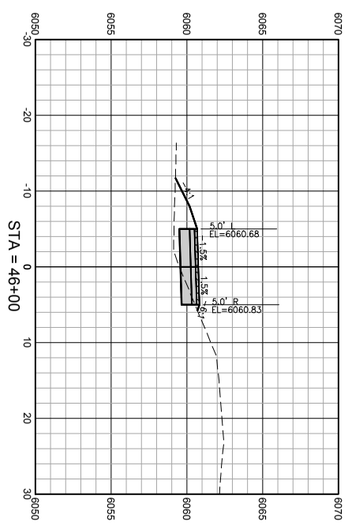

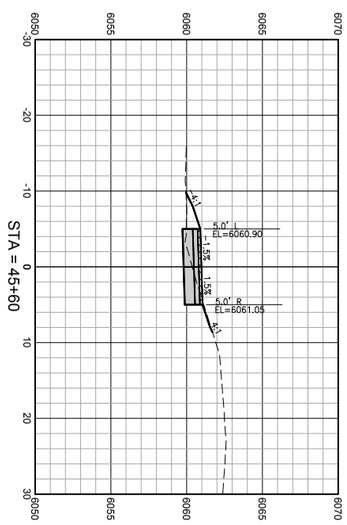

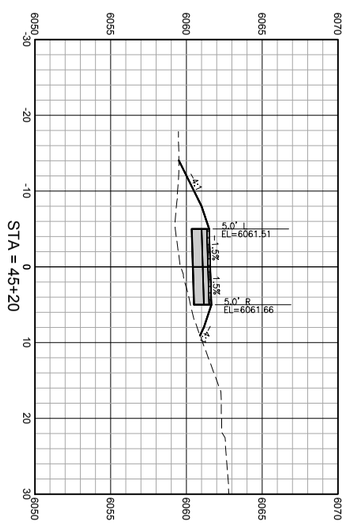

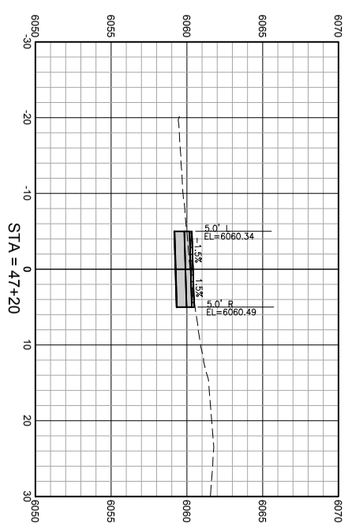

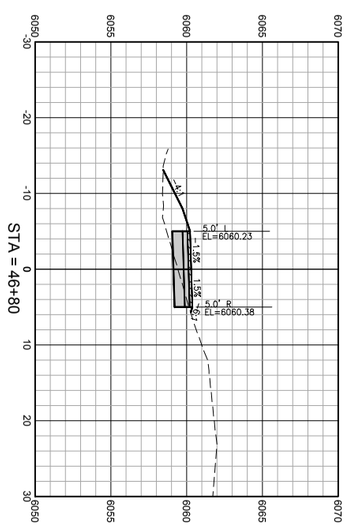

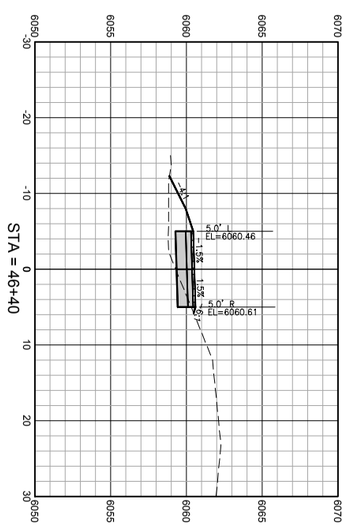

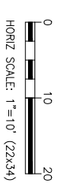

DRAWING NO: X10	JOB TITLE: SOUTH PARK LOOP CONNECTOR PATHWAY PROJECT TETON COUNTY, WY	DRAWING TITLE: CROSS SECTIONS	NELSON ENGINEERING P.O. BOX 1599, JACKSON WYOMING (307) 733-2087	DATE: 3/25/16	REV.
JOB NO: 15-257-02				SURVEYED: NE	
				ENGINEERED: DD	
				DRAWN: DB	
				CHECKED: DD	
				APPROVED: DD	

S:\Proj2015\257-02 (Design - South Park Loop Pathway Connector)\Drawings\Align & Grading.dwg (Section Sheet - 11) - Mar 25 2016 03:59:46 pm PLOTTED BY: karichner DWG FORMAT: 191

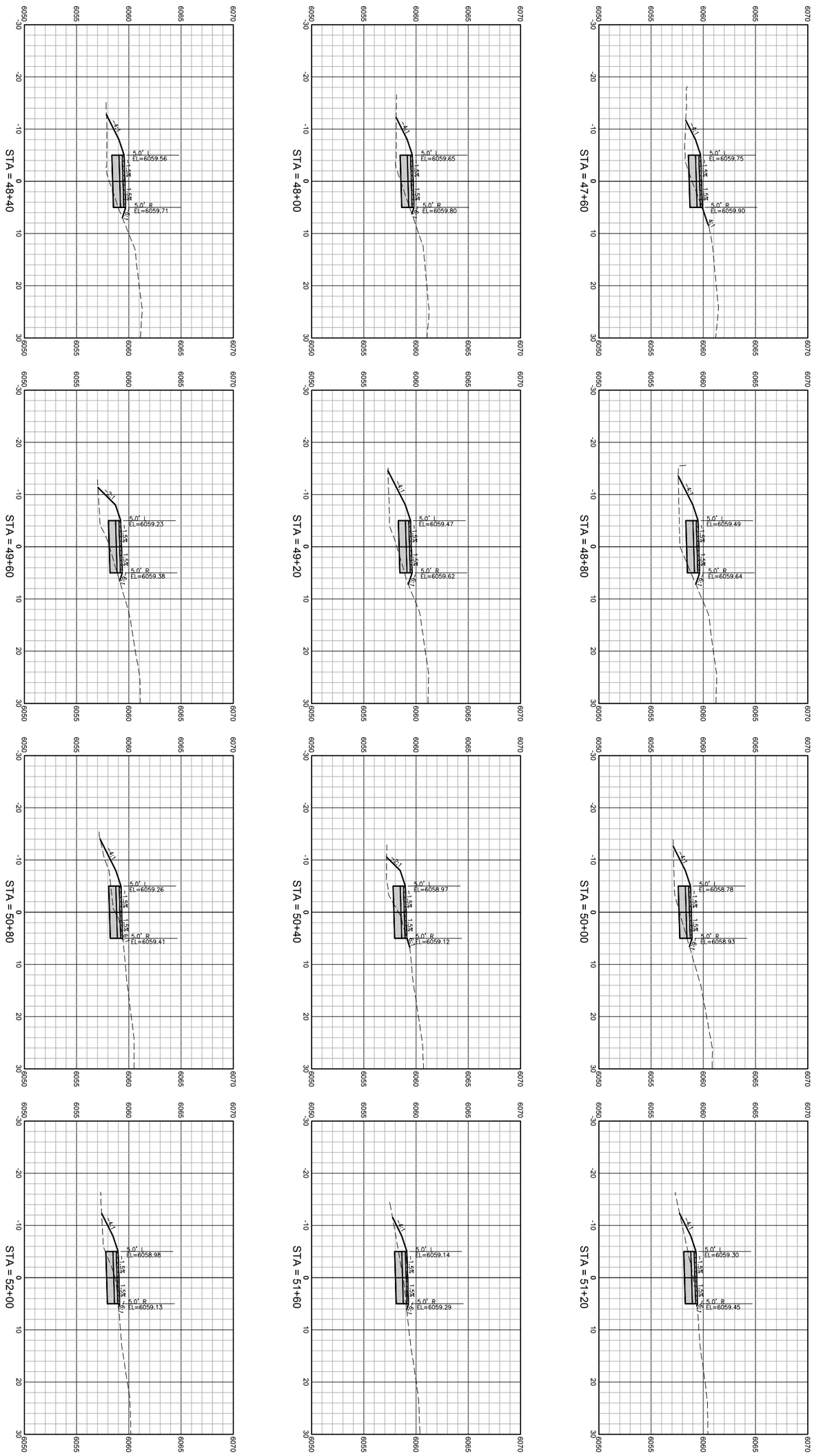

HORIZ SCALE: 1"=10' (22x34)

0 10 20

DRAWING NO: X11	JOB TITLE: SOUTH PARK LOOP CONNECTOR PATHWAY PROJECT TETON COUNTY, WY	DRAWING TITLE: CROSS SECTIONS	NELSON ENGINEERING P.O. BOX 1599, JACKSON WYOMING (307) 733-2087	DATE: 3/25/16	REV.
JOB NO: 15-257-02				SURVEYED: NE	
				ENGINEERED: DD	
				DRAWN: DB	
				CHECKED: DD	
				APPROVED: DD	

S:\Proj2015\257-02 (Design - South Park Loop Pathway Connector)\Drawings\Align & Grading.dwg (Section Sheet - 12) - Mar 25 2016 03:00:56 pm PLOTTED BY: karichner DWG FORMAT: 191

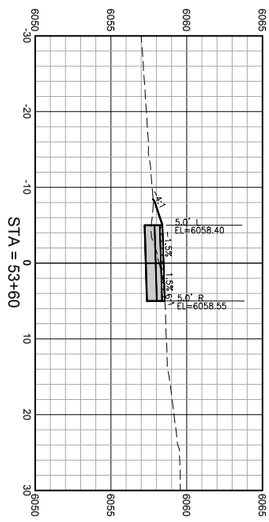

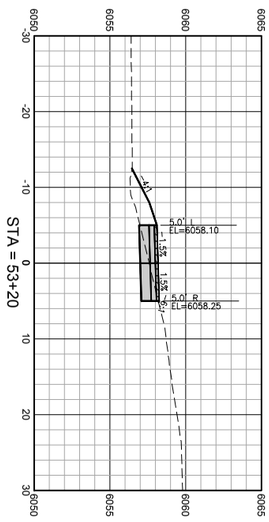

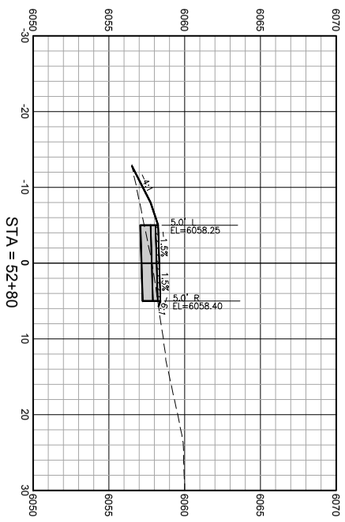

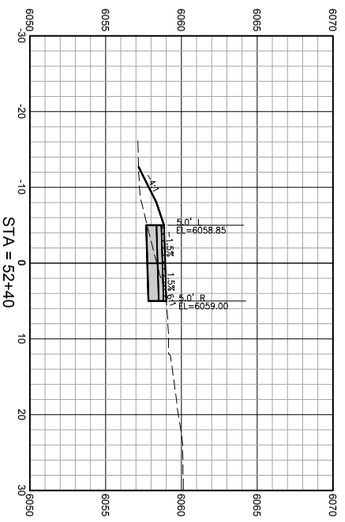

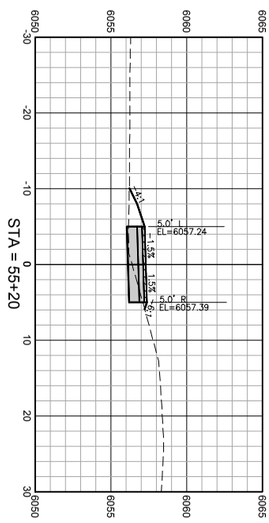

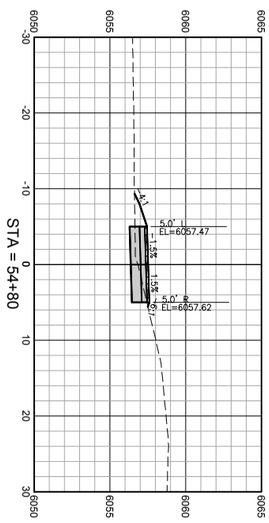

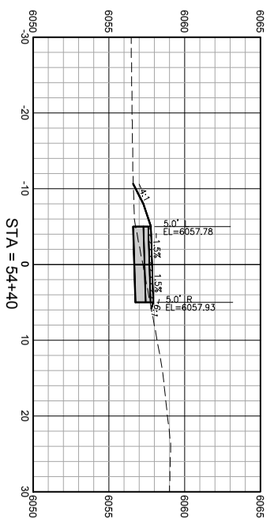

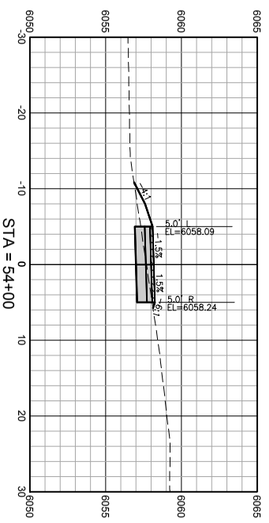

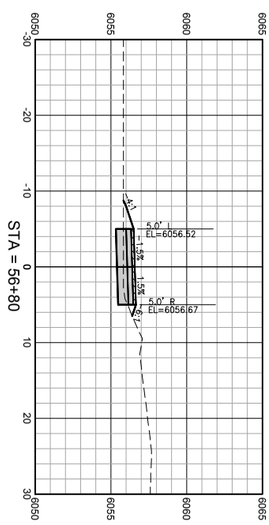

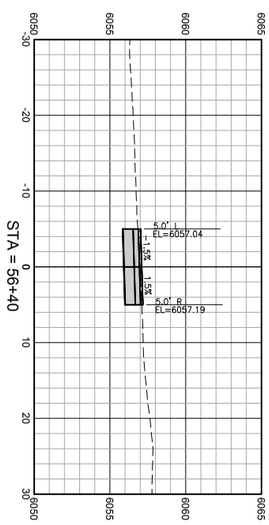

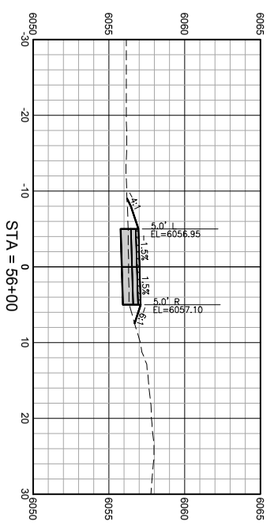

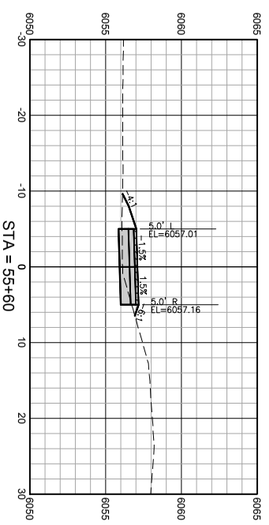

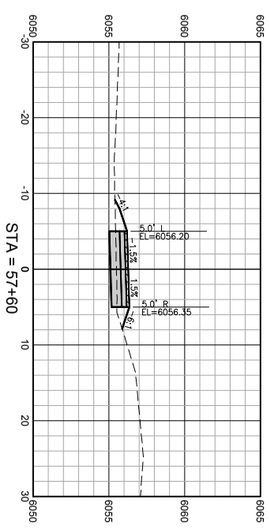

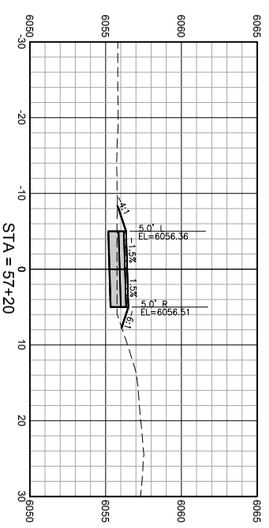

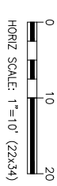

DRAWING NO: X12	JOB TITLE: SOUTH PARK LOOP CONNECTOR PATHWAY PROJECT TETON COUNTY, WY	DRAWING TITLE: CROSS SECTIONS	NELSON ENGINEERING P.O. BOX 1599, JACKSON WYOMING (307) 733-2087	DATE: 3/25/16	REV.
JOB NO: 15-257-02				SURVEYED: NE	
				ENGINEERED: DD	
				DRAWN: DB	
				CHECKED: DD	
				APPROVED: DD	

S:\Proj2015\257-02 (Design - South Park Loop Pathway Connector)\Drawings\Align & Grading.dwg (Section Sheet - 13) - Mar 25 2016 03:51:06 pm PLOTTED BY: karichner DWG FORMAT: 19.1

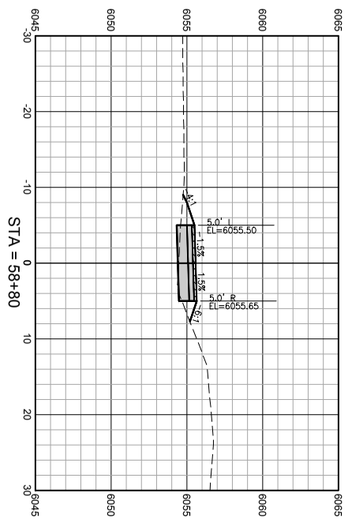

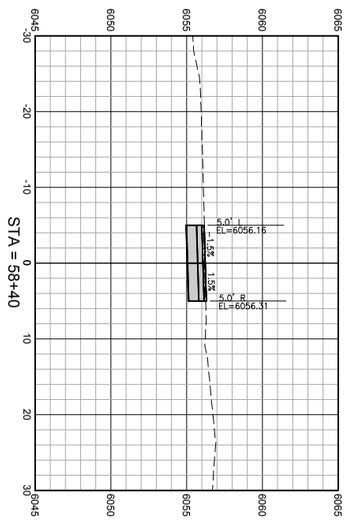

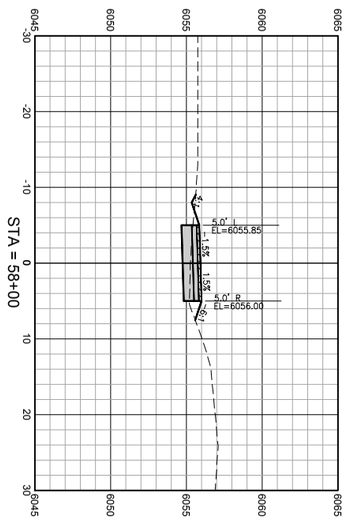

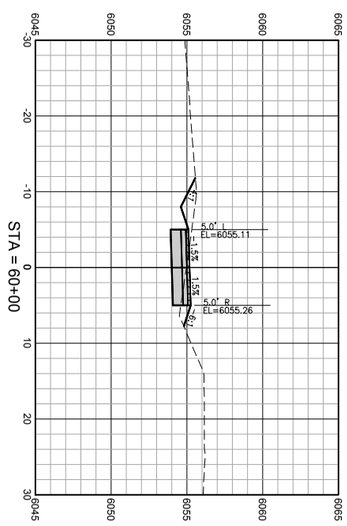

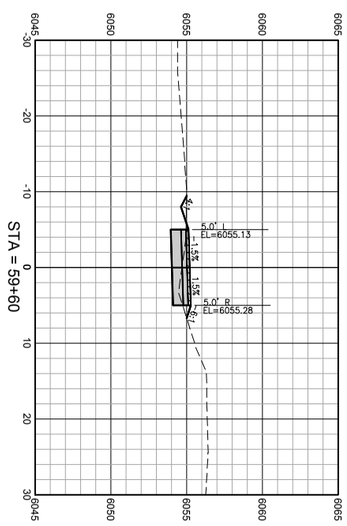

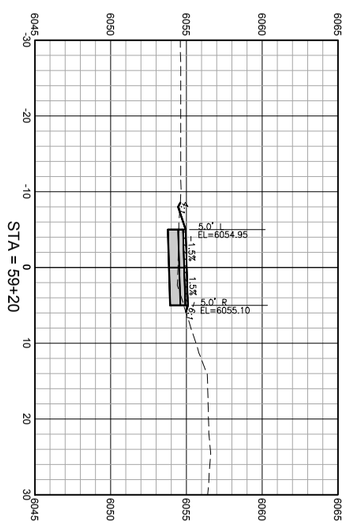

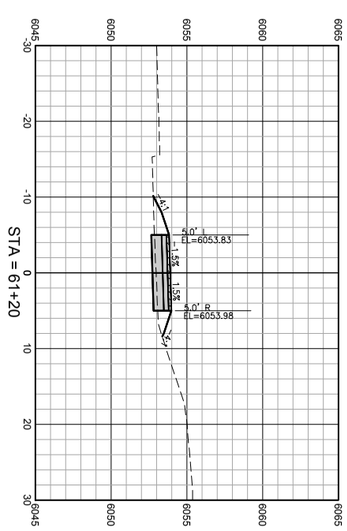

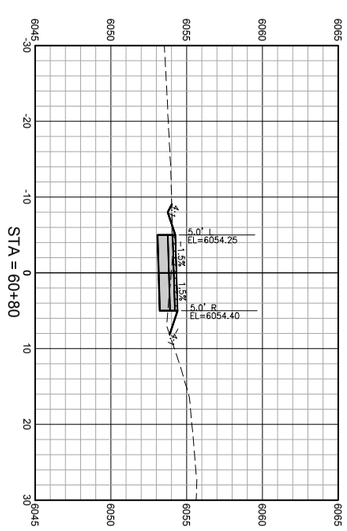

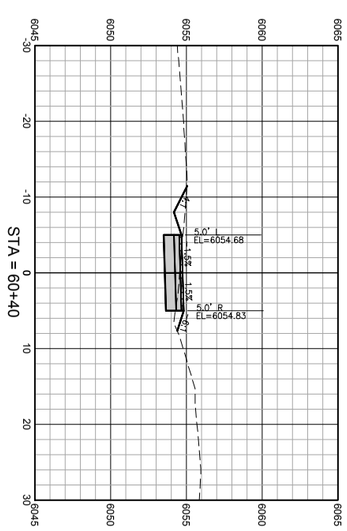

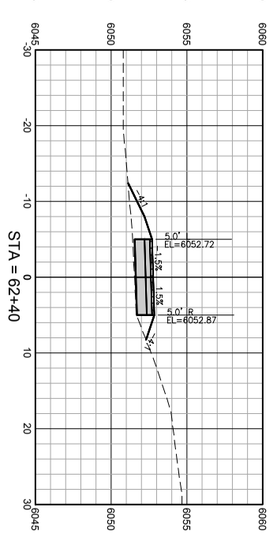

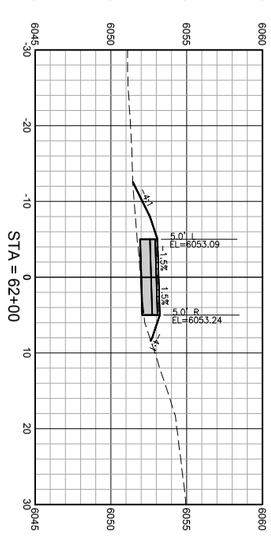

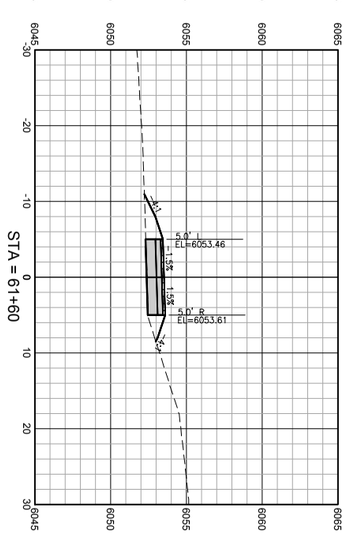

HORIZ SCALE: 1"=10' (22x34)

DRAWING NO: X13	JOB TITLE: SOUTH PARK LOOP CONNECTOR PATHWAY PROJECT TETON COUNTY, WY	DRAWING TITLE: CROSS SECTIONS	NELSON ENGINEERING P.O. BOX 1599, JACKSON WYOMING (307) 733-2087	DATE: 3/25/16	REV.
JOB NO: 15-257-02				SURVEYED: NE	
				ENGINEERED: DD	
				DRAWN: DB	
				CHECKED: DD	
				APPROVED: DD	

S:\Proj2015\257-02 (Design - South Park Loop Pathway Connector)\Drawings\Align & Grading.dwg (Section Sheet - 14) - Mar 25 2016 03:01:16 pm PLOTTED BY: kerichner DWG FORMAT: 19.1

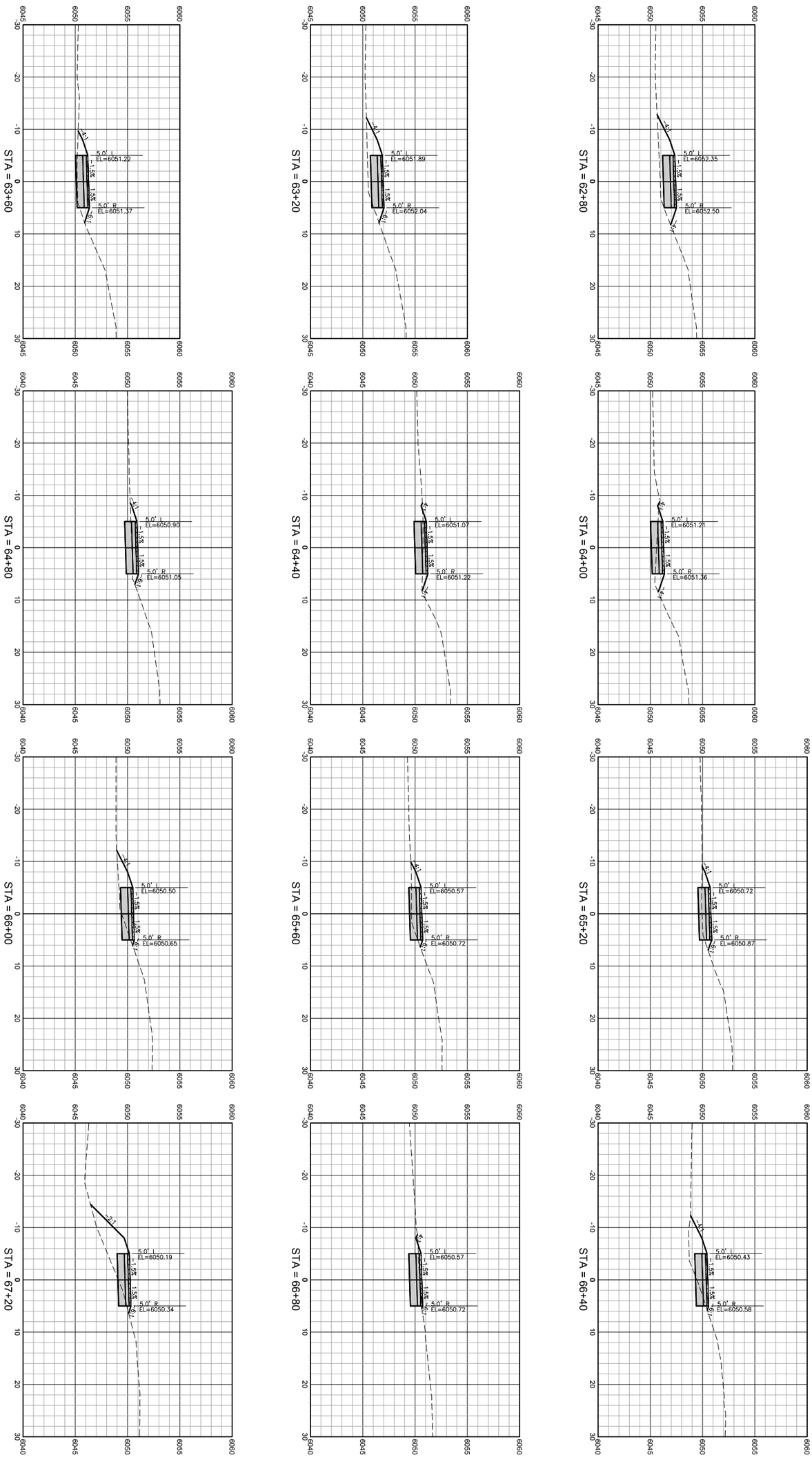

HORIZ SCALE: 1"=10' (22x34)

DRAWING NO: X14	JOB TITLE: SOUTH PARK LOOP CONNECTOR PATHWAY PROJECT TETON COUNTY, WY	DRAWING TITLE: CROSS SECTIONS	NELSON ENGINEERING P.O. BOX 1599, JACKSON WYOMING (307) 733-2087	DATE: 3/25/16	REV.
JOB NO: 15-257-02				SURVEYED: NE	
				ENGINEERED: DD	
				DRAWN: DB	
				CHECKED: DD	
				APPROVED: DD	

S:\Proj2015\257-02 (Design - South Park Loop Pathway Connector)\Drawings\Align & Grading.dwg (Section Sheet - 15) - Mar 25 2016 03:01:26 pm PLOTTED BY: karlchner DWG FORMAT: 19.1

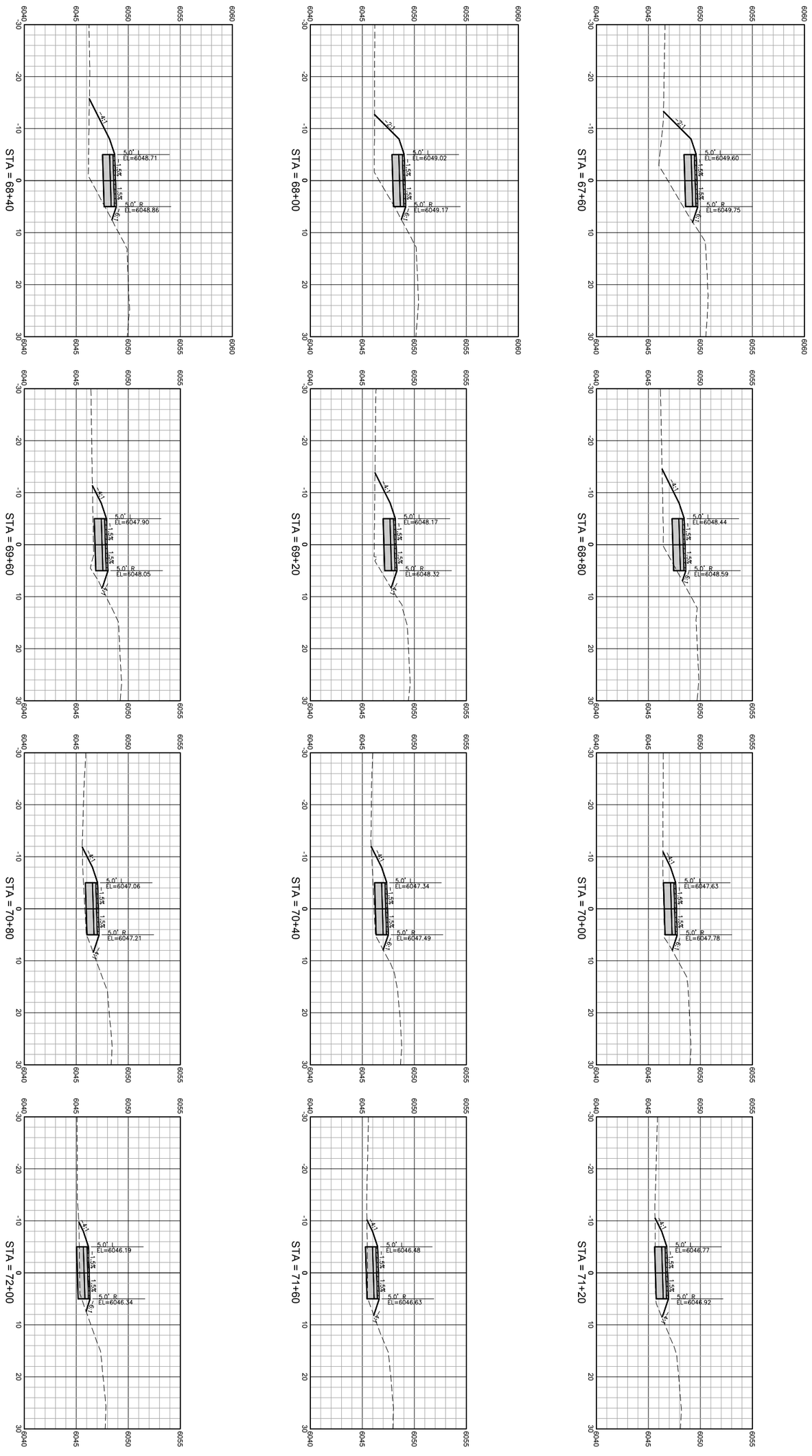

HORIZ SCALE: 1"=10' (22x34)

DRAWING NO: X15	JOB TITLE: SOUTH PARK LOOP CONNECTOR PATHWAY PROJECT TETON COUNTY, WY	DRAWING TITLE: CROSS SECTIONS	NELSON ENGINEERING P.O. BOX 1599, JACKSON WYOMING (307) 733-2087	DATE: 3/25/16	REV.
JOB NO: 15-257-02				SURVEYED: NE	
				ENGINEERED: DD	
				DRAWN: DB	
				CHECKED: DD	
				APPROVED: DD	

S:\Proj2015\257-02 (Design - South Park Loop Pathway Connector)\Drawings\Align & Grading.dwg (Section Sheet - 16) - Mar 25 2016 03:01:36 pm PLOTTED BY: karlchner DWG FORMAT: 19.1

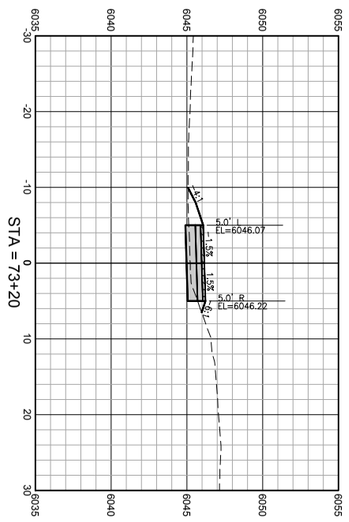

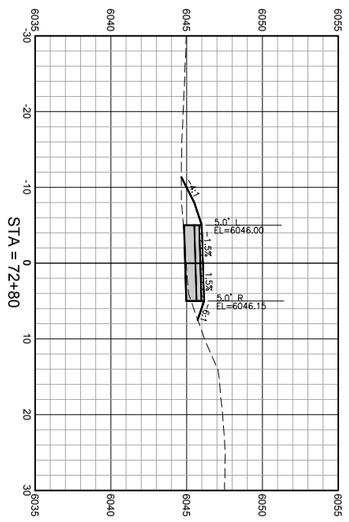

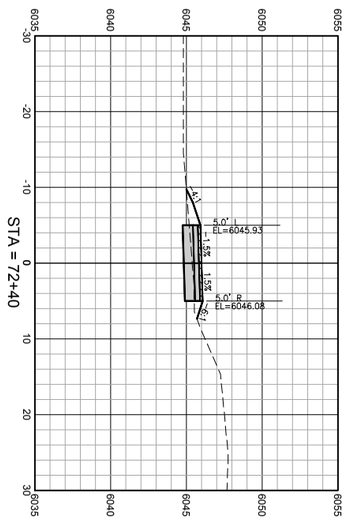

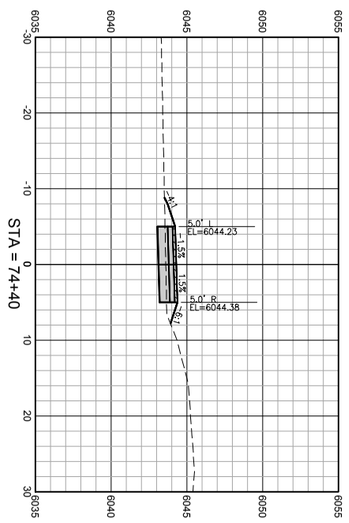

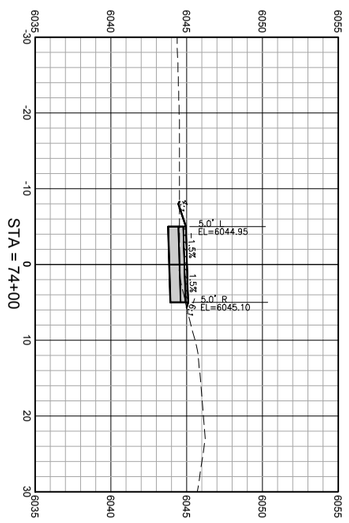

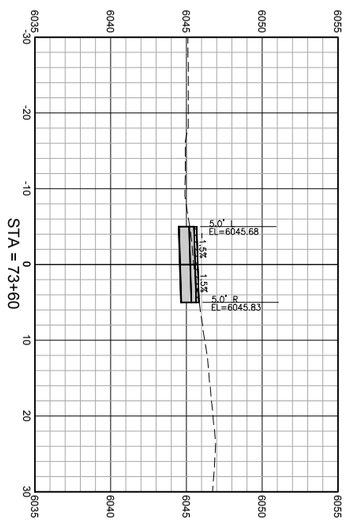

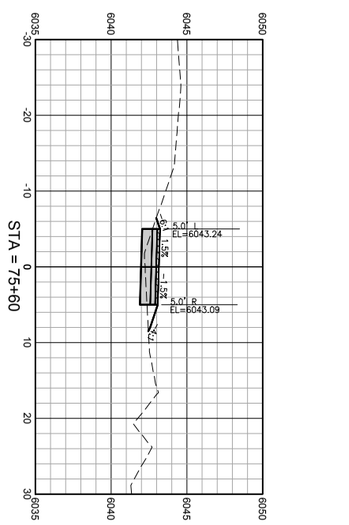

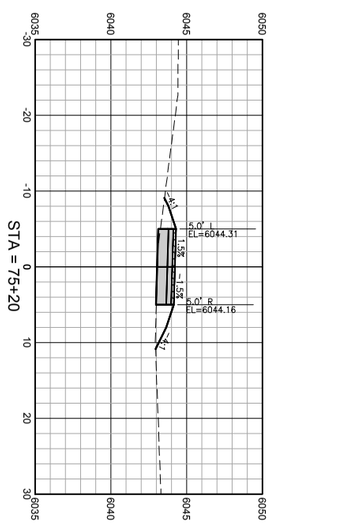

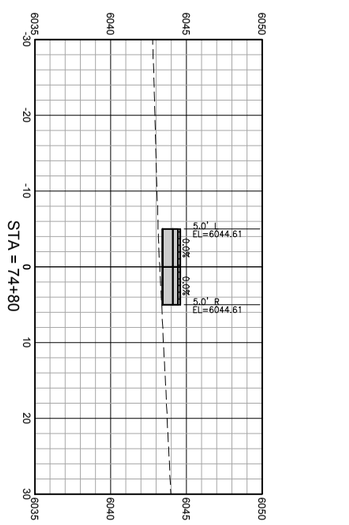

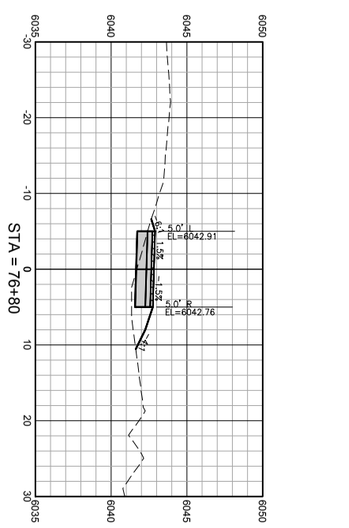

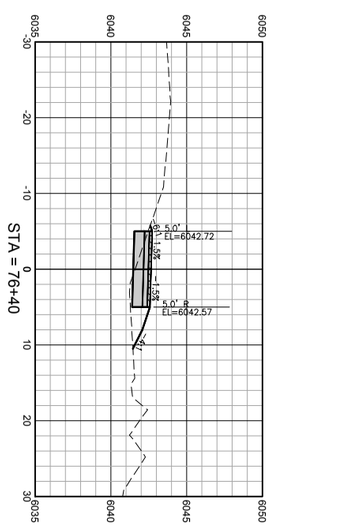

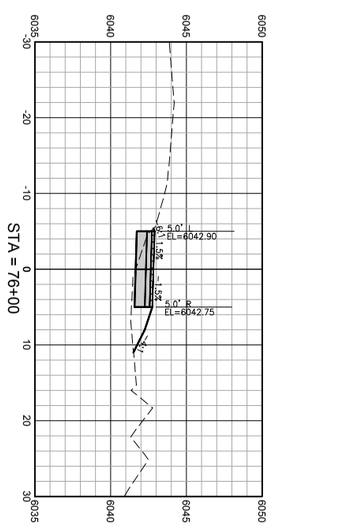

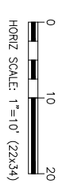

DRAWING NO: X16	JOB TITLE: SOUTH PARK LOOP CONNECTOR PATHWAY PROJECT TETON COUNTY, WY	DRAWING TITLE: CROSS SECTIONS	NELSON ENGINEERING P.O. BOX 1599, JACKSON WYOMING (307) 733-2087	DATE: 3/25/16	REV.
JOB NO: 15-257-02				SURVEYED: NE	
				ENGINEERED: DD	
				DRAWN: DB	
				CHECKED: DD	
				APPROVED: DD	

S:\Proj2015\257-02 (Design - South Park Loop Pathway Connector)\Drawings\Align & Grading.dwg (Section Sheet - 17) - Mar 25 2016 03:01:46 pm PLOTTED BY: karlchner DWG FORMAT: 19.1

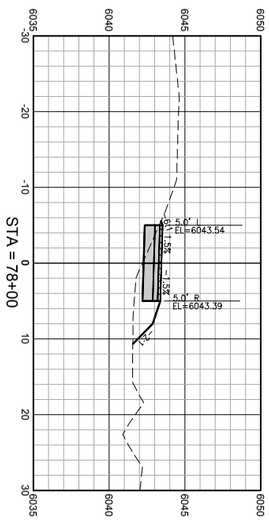

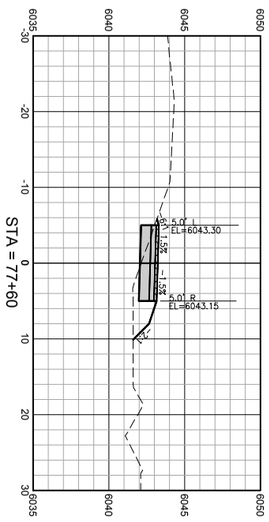

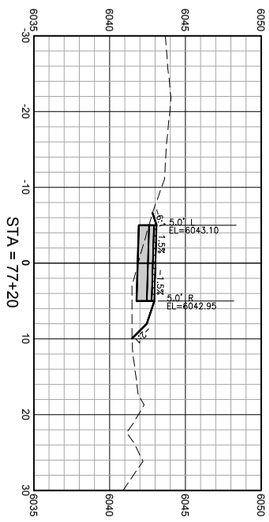

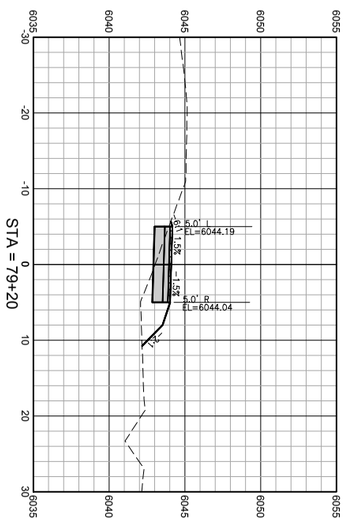

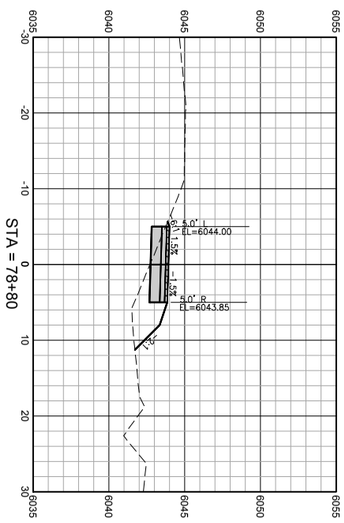

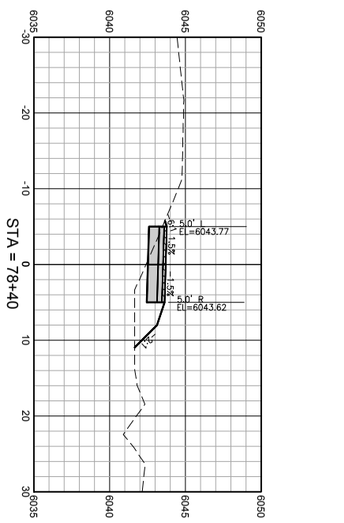

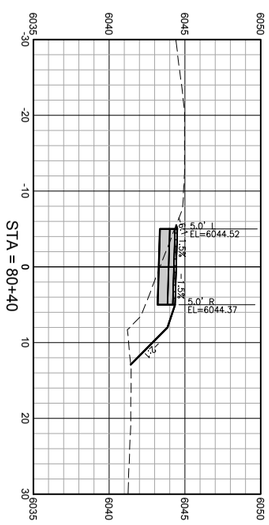

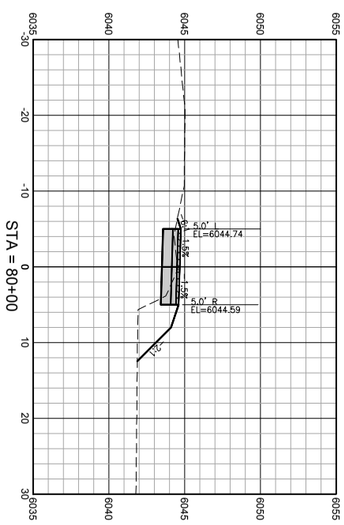

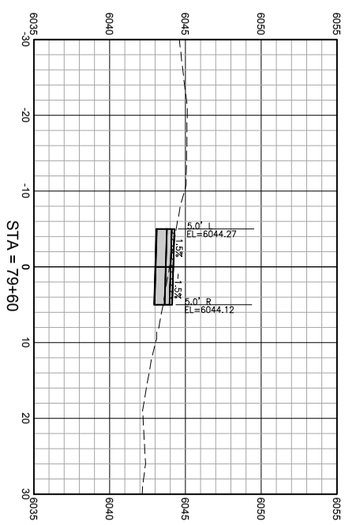

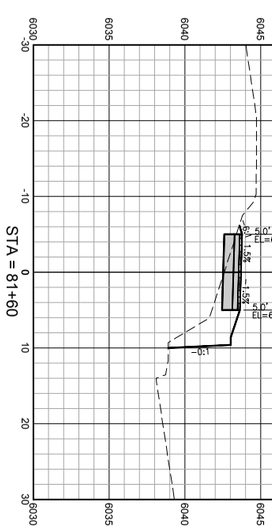

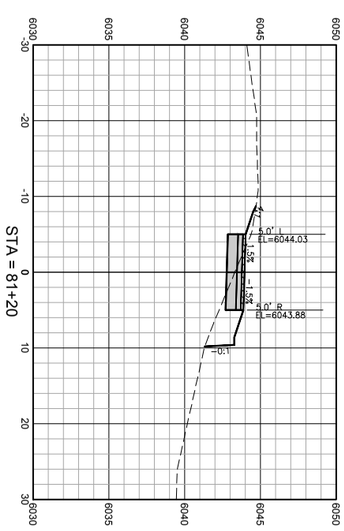

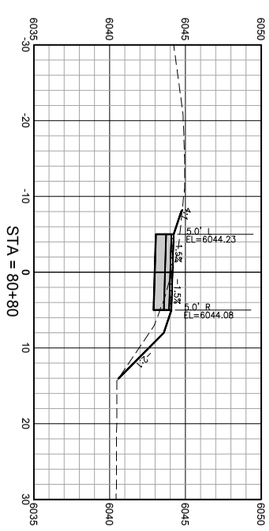

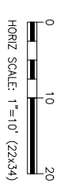

DRAWING NO: X17	JOB TITLE: SOUTH PARK LOOP CONNECTOR PATHWAY PROJECT TETON COUNTY, WY	DRAWING TITLE: CROSS SECTIONS	NELSON ENGINEERING P.O. BOX 1599, JACKSON WYOMING (307) 733-2087	DATE: 3/25/16	REV.
JOB NO: 15-257-02				SURVEYED: NE	
				ENGINEERED: DD	
				DRAWN: DB	
				CHECKED: DD	
				APPROVED: DD	

S:\Proj2015\257-02 (Design - South Park Loop Pathway Connector)\Drawings\Align & Grading.dwg <Section Sheet - 18> - Mar 25 2016 03:51:56 pm PLOTTED BY: karichner DWG FORMAT: 19.1

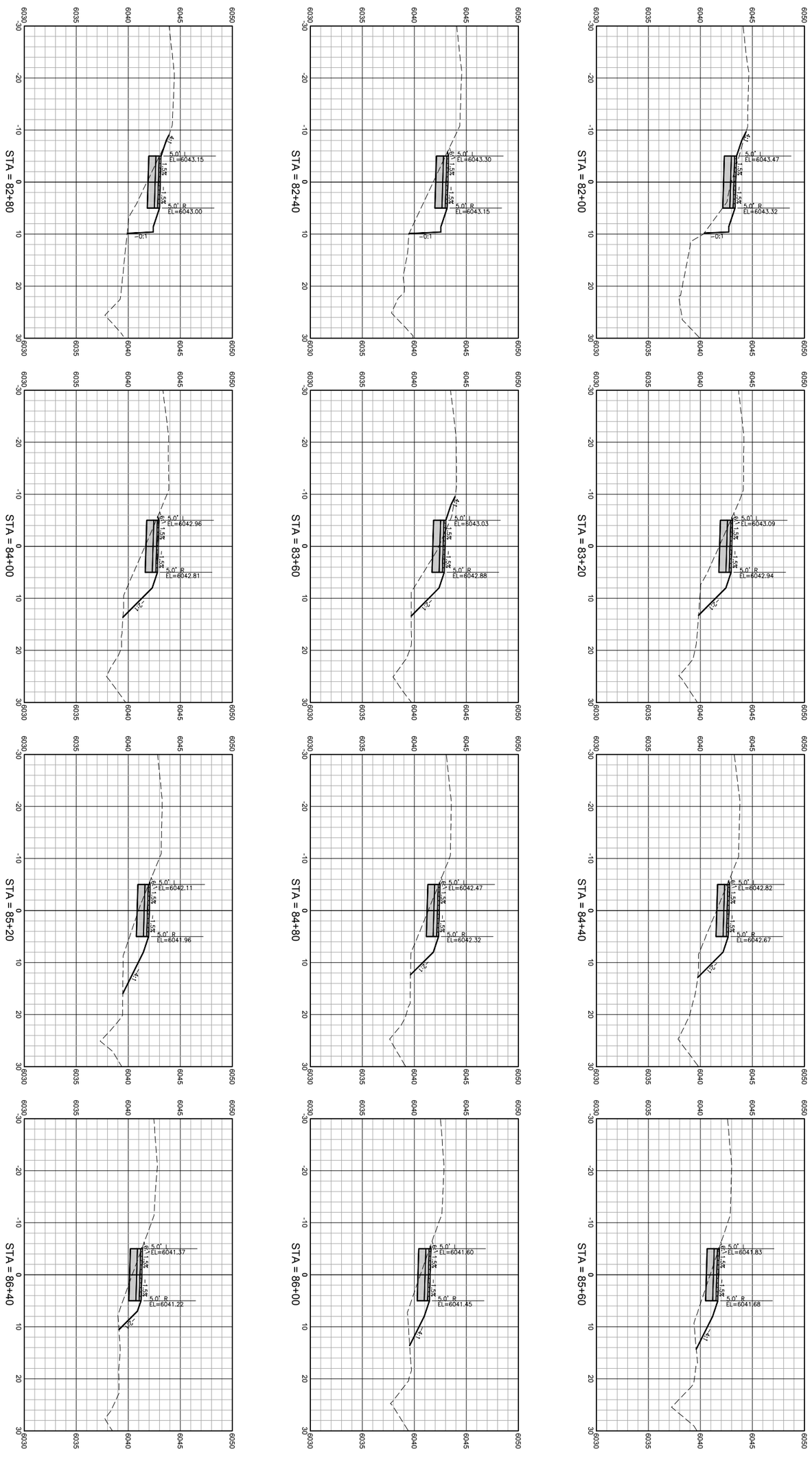

HORIZ SCALE: 1"=10' (22x34)

0 10 20

DRAWING NO: X18	JOB TITLE: SOUTH PARK LOOP CONNECTOR PATHWAY PROJECT TETON COUNTY, WY	DRAWING TITLE: CROSS SECTIONS	NELSON ENGINEERING P.O. BOX 1599, JACKSON WYOMING (307) 733-2087	DATE: 3/25/16	REV.
JOB NO: 15-257-02				SURVEYED: NE	
				ENGINEERED: DD	
				DRAWN: DB	
				CHECKED: DD	
				APPROVED: DD	

S:\Proj2015\257-02 (Design - South Park Loop Pathway Connector)\Drawings\Align & Grading.dwg (Section Sheet - 19) - Mar 25 2016 03:52:06 pm PLOTTED BY: karichner DWG FORMAT: 19)

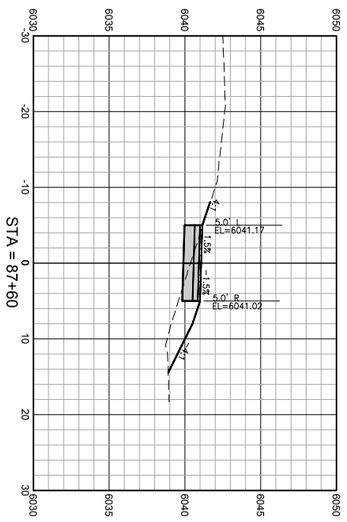

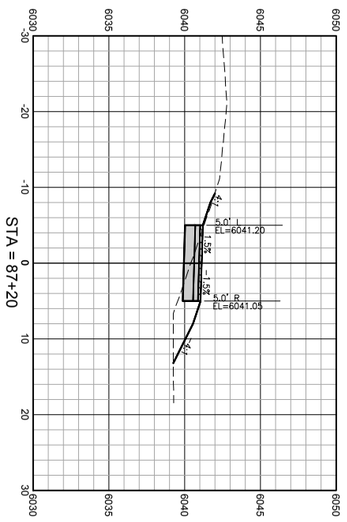

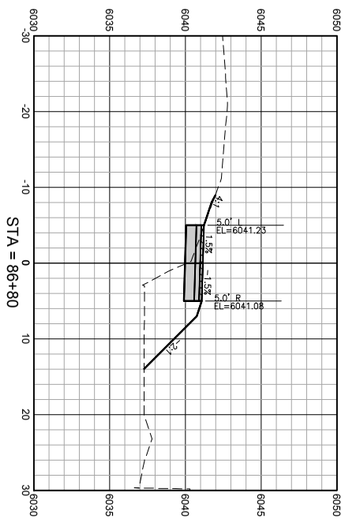

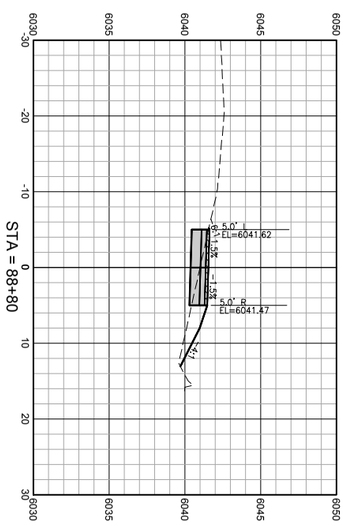

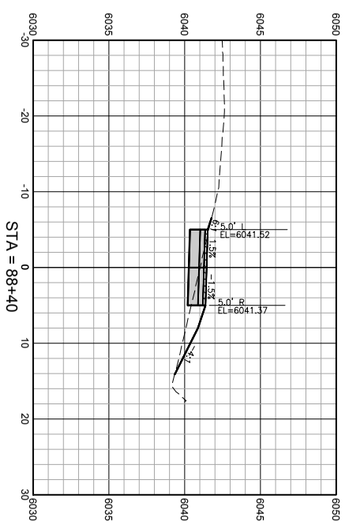

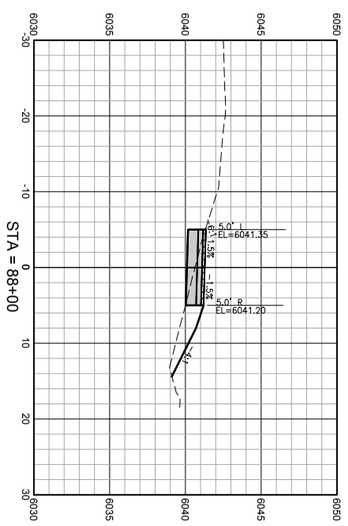

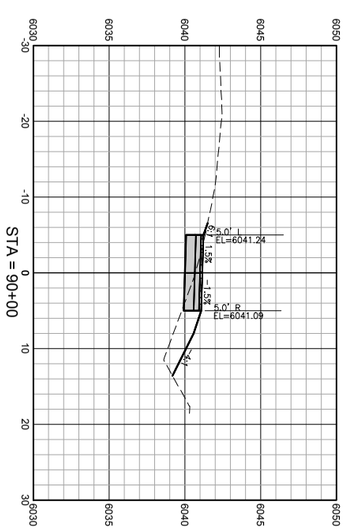

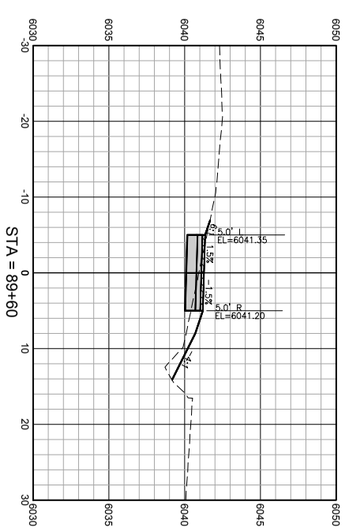

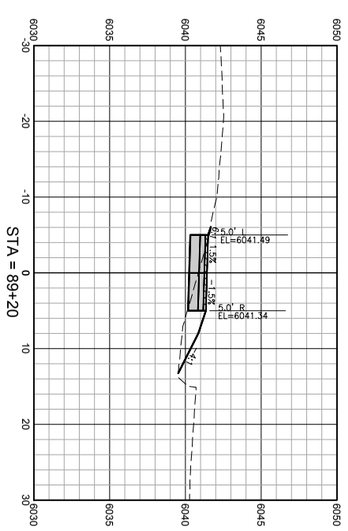

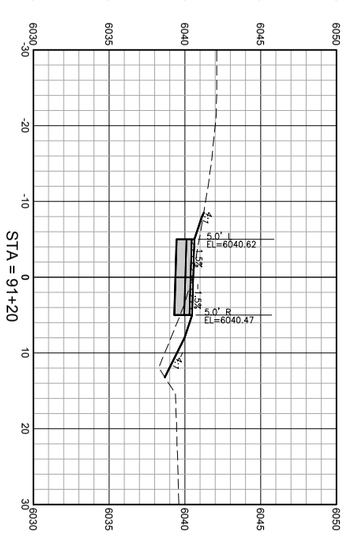

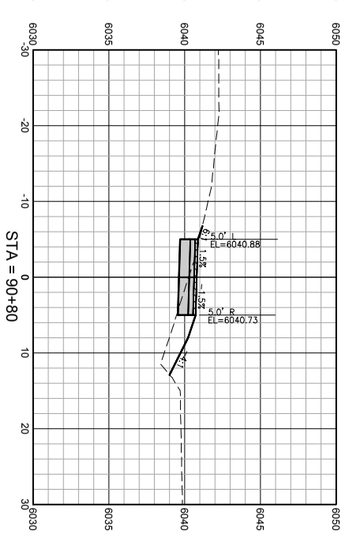

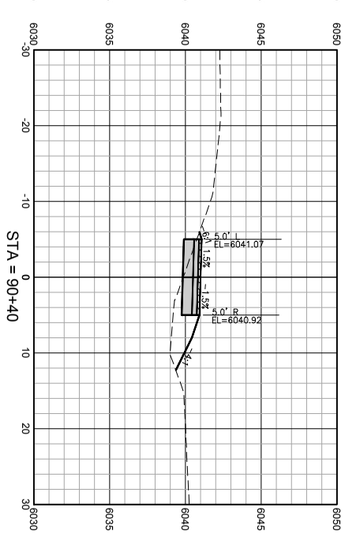

HORIZ SCALE: 1"=10' (22x34)

DRAWING NO: X19	JOB TITLE: SOUTH PARK LOOP CONNECTOR PATHWAY PROJECT TETON COUNTY, WY	DRAWING TITLE: CROSS SECTIONS	NELSON ENGINEERING P.O. BOX 1599, JACKSON WYOMING (307) 733-2087	DATE: 3/25/16	REV.
JOB NO: 15-257-02				SURVEYED: NE	
				ENGINEERED: DD	
				DRAWN: DB	
				CHECKED: DD	
				APPROVED: DD	

S:\Proj2015\257-02 (Design - South Park Loop Pathway Connector)\Drawings\Align & Grading.dwg (Section Sheet - 20) - Mar 25 2016 03:52:16 pm PLOTTED BY: karichner DWG FORMAT: 19.1

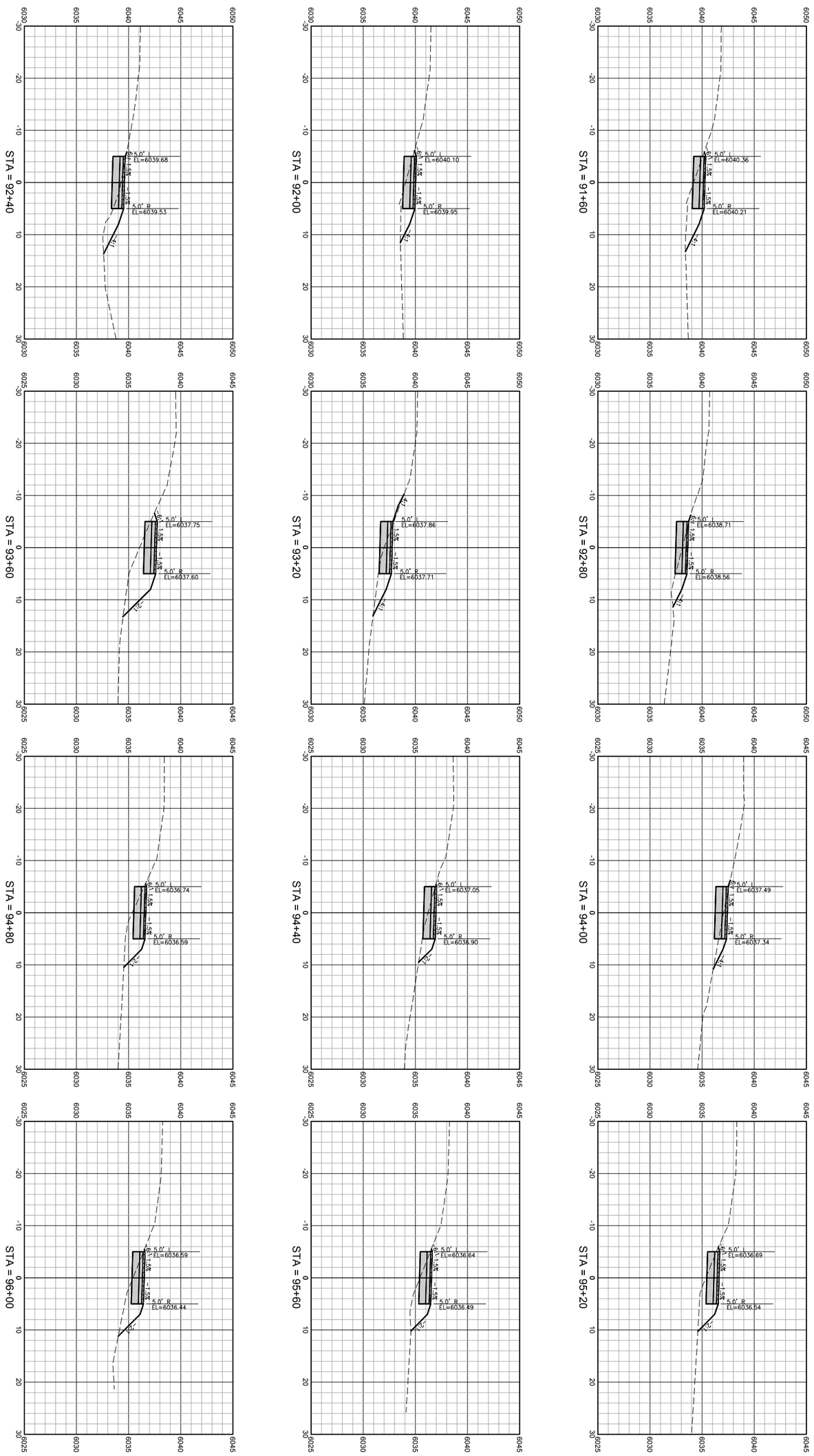

HORIZ SCALE: 1"=10' (22x34)

DRAWING NO: X20	JOB TITLE: SOUTH PARK LOOP CONNECTOR PATHWAY PROJECT TETON COUNTY, WY	DRAWING TITLE: CROSS SECTIONS	NELSON ENGINEERING P.O. BOX 1599, JACKSON WYOMING (307) 733-2087	DATE: 3/25/16	REV.
JOB NO: 15-257-02				SURVEYED: NE	
				ENGINEERED: DD	
				DRAWN: DB	
				CHECKED: DD	
				APPROVED: DD	

S:\Proj2015\257-02 (Design - South Park Loop Pathway Connector)\Drawings\Align & Grading.dwg (Section Sheet - 21) - Mar 25 2016 03:02:26 pm PLOTTED BY: konichner DWG FORMAT: 191

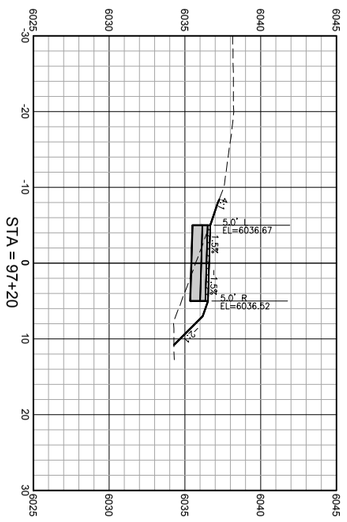

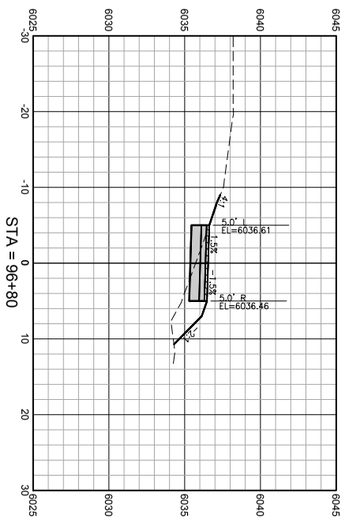

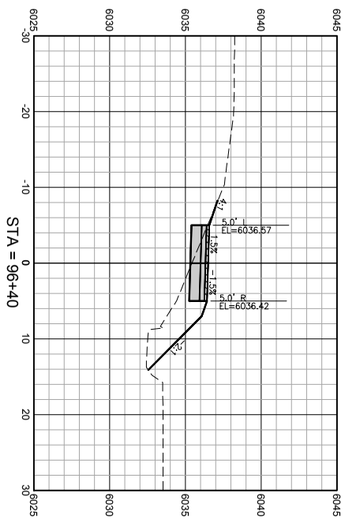

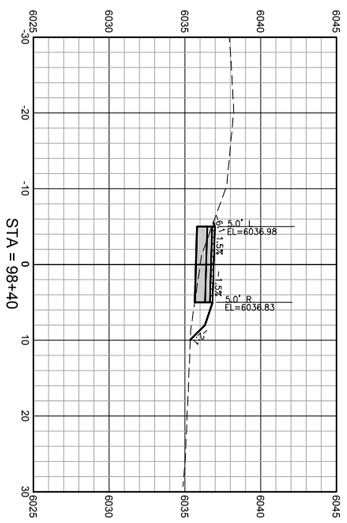

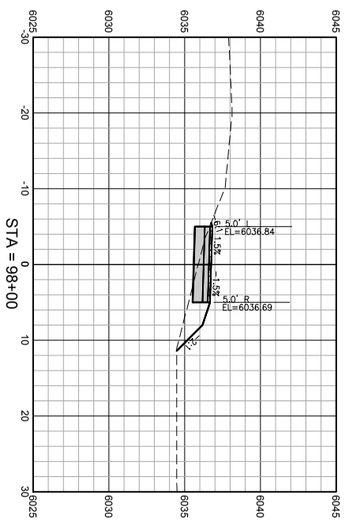

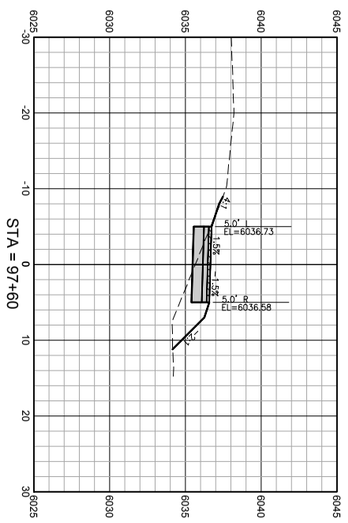

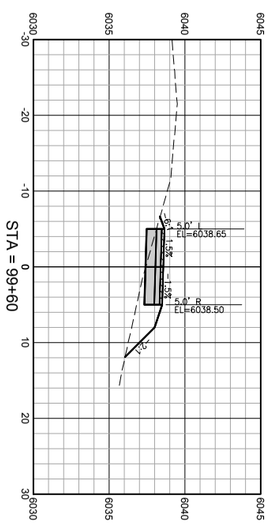

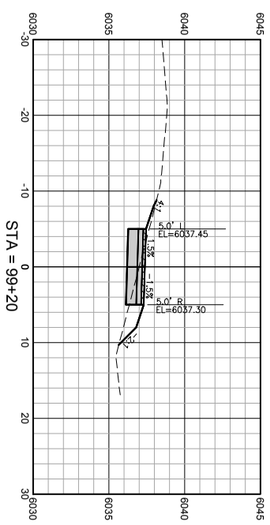

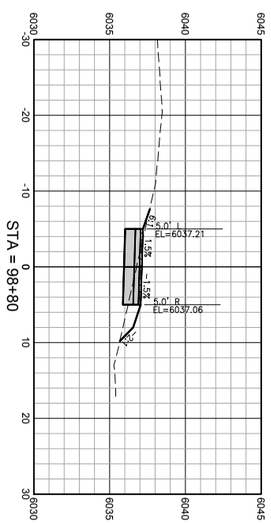

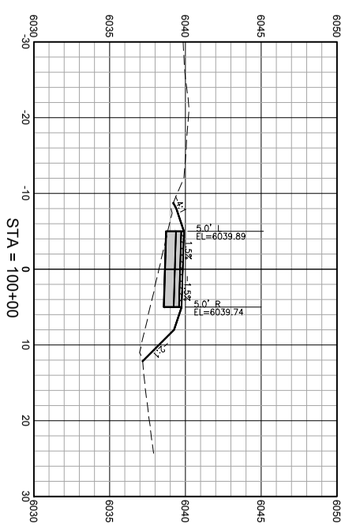

HORIZ SCALE: 1"=10' (22x34)

DRAWING NO: X21	JOB TITLE: SOUTH PARK LOOP CONNECTOR PATHWAY PROJECT TETON COUNTY, WY	DRAWING TITLE: CROSS SECTIONS	NELSON ENGINEERING P.O. BOX 1599, JACKSON WYOMING (307) 733-2087	DATE: 3/25/16	REV.
JOB NO: 15-257-02				SURVEYED: NE	
				ENGINEERED: DD	
				DRAWN: DB	
				CHECKED: DD	
				APPROVED: DD	

✱ USE ONLY IF NO PREVIOUS "ROAD WORK AHEAD" SIGNS WITHIN 1 MILE [1.6 km], OR IF OUTSIDE OF THE REGULAR CONSTRUCTION AREA.

◆ TYPICAL APPROACH SIGNING, SIGN FOR BOTH DIRECTIONS (SIGNS SHOWN FOR ONE DIRECTION OF TRAVEL ONLY).

LEGEND

- TYPE III DELINEATOR
- CONSTRUCTION AREA
- STORAGE AREA
- DRUM

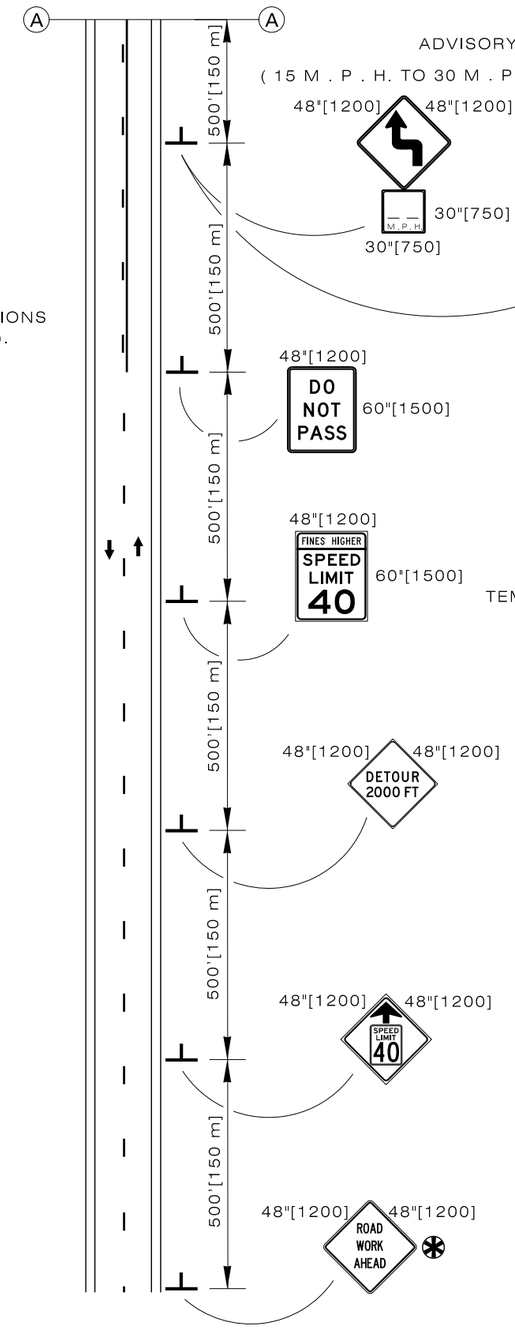

◆ TYPICAL APPROACH SIGNING

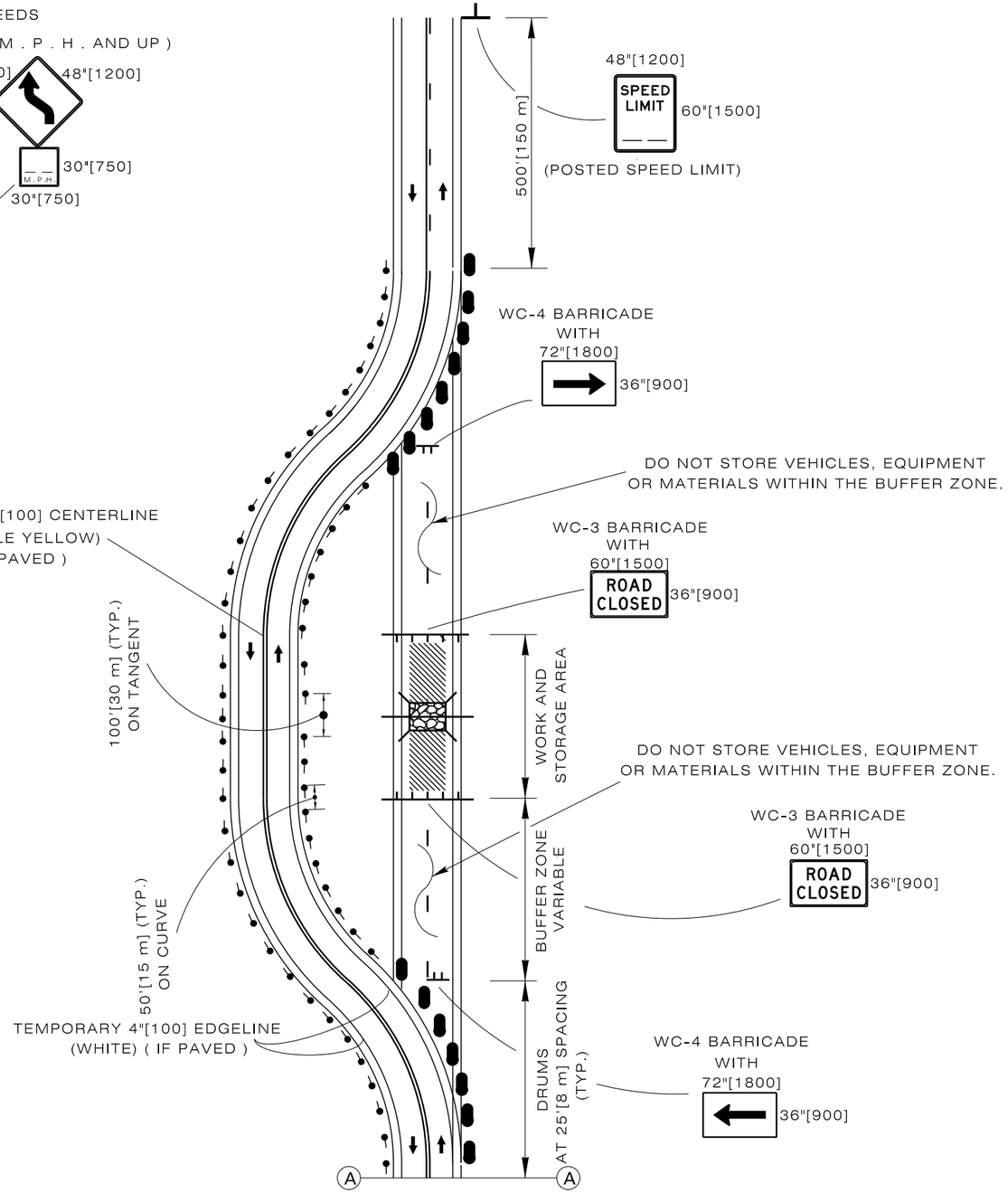

Designed by:	TRAFFIC
Drawn by:	JTG
Checked by:	TRAFFIC
Previous Dwg. No.	703-2D

TYPICAL TRAFFIC CONTROL SIGNING FOR DETOUR AROUND CONSTRUCTION

Note: Units shown in brackets [ ] are metric and are in millimeters (mm) unless other units are shown.

WYOMING DEPARTMENT OF TRANSPORTATION

CONSTRUCTION TRAFFIC CONTROL TWO LANE

STANDARD PLAN

STANDARD PLAN NUMBER
703-2E
SHEET 1 of 6
Issued by: TRAFFIC PROGRAM
Date Issued: OCTOBER, 2014

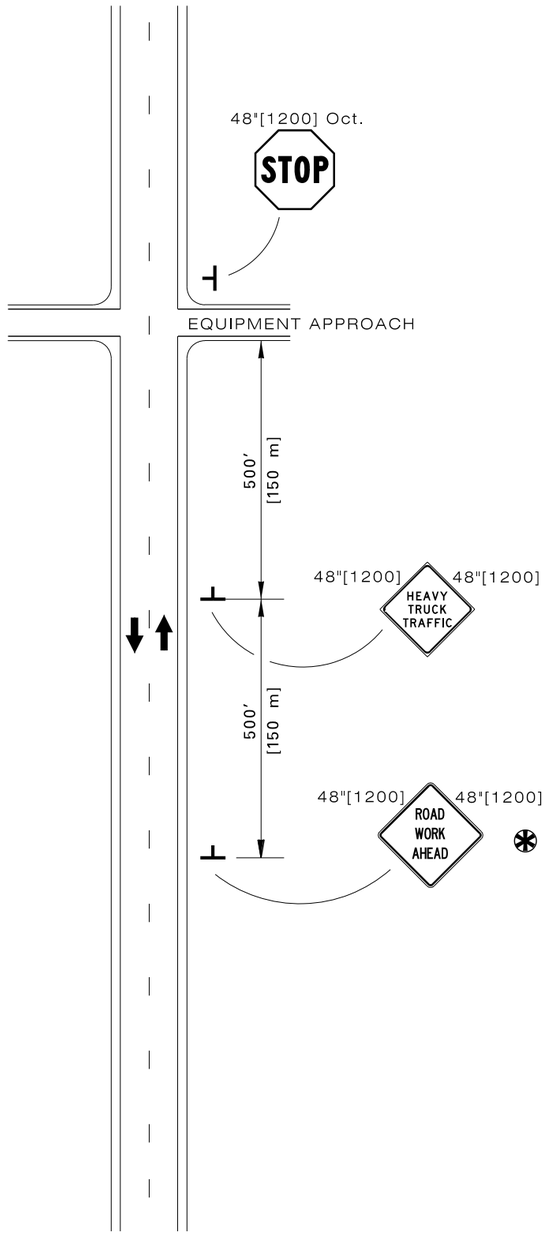

EQUIPMENT CROSSING STOP CONTROL

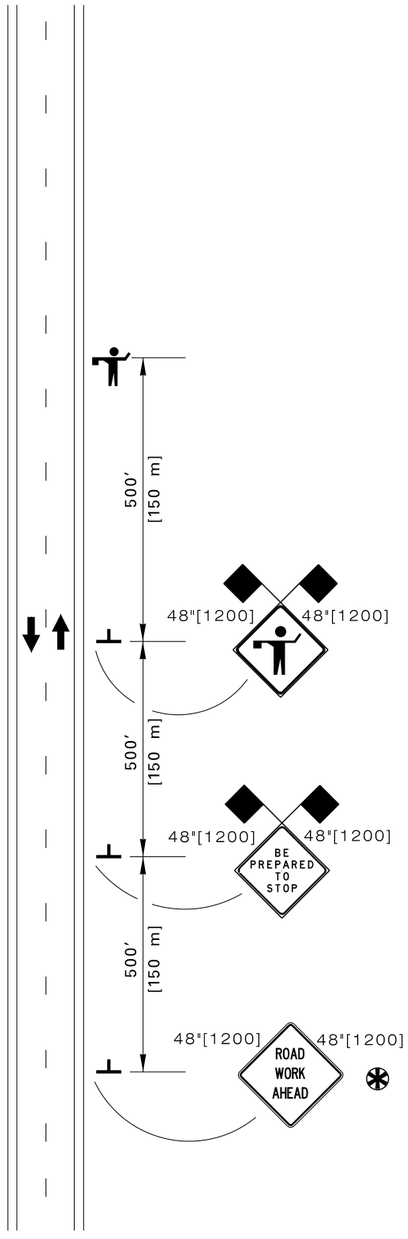

TYPICAL FLAGGER STATION SIGNING

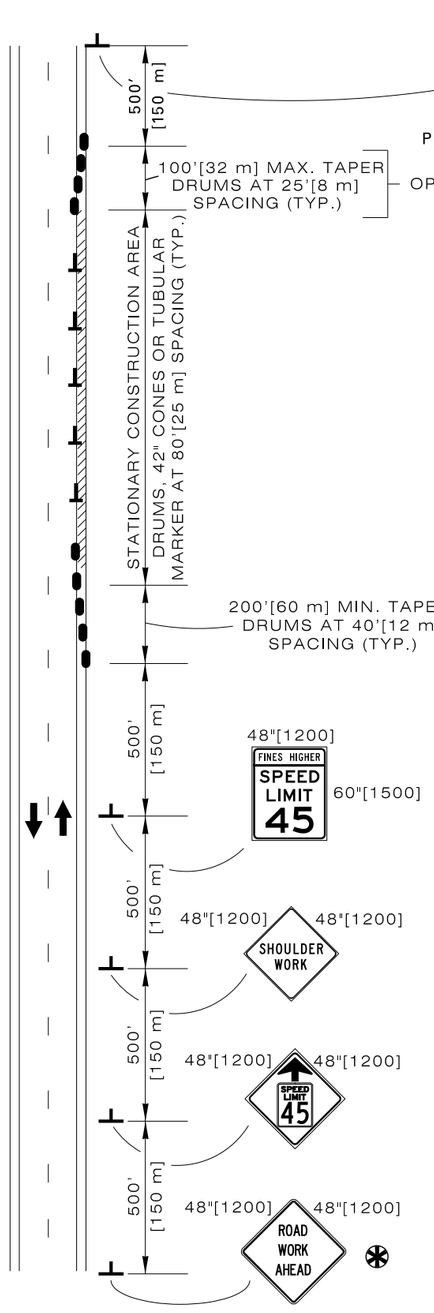

SHOULDER REPAIR WORK 10'[3 m] MIN. LANE WIDTH

LEGEND

- DRUM
- FLAGS
- FLAGGER
- CONSTRUCTION AREA
- DRUM, 42"[1050] CONE OR TUBULAR MARKER

✱ USE ONLY IF NO PREVIOUS "ROAD WORK AHEAD" SIGNS WITHIN 1 MILE [1.6 km], OR IF OUTSIDE OF THE REGULAR CONSTRUCTION AREA.

♦ TYPICAL APPROACH SIGNING, SIGN FOR BOTH DIRECTIONS (SIGNS SHOWN FOR ONE DIRECTION OF TRAVEL ONLY).

Designed by:	TRAFFIC
Drawn by:	JTG
Checked by:	TRAFFIC
Previous Dwg. No.	703-2D

TYPICAL TRAFFIC CONTROL SIGNING

Note: Units shown in brackets [ ] are metric and are in millimeters (mm) unless other units are shown.

WYOMING DEPARTMENT OF TRANSPORTATION

CONSTRUCTION TRAFFIC CONTROL TWO LANE

STANDARD PLAN

STANDARD PLAN NUMBER
703-2E
SHEET 2 of 6
Issued by: TRAFFIC PROGRAM
Date Issued: OCTOBER, 2014

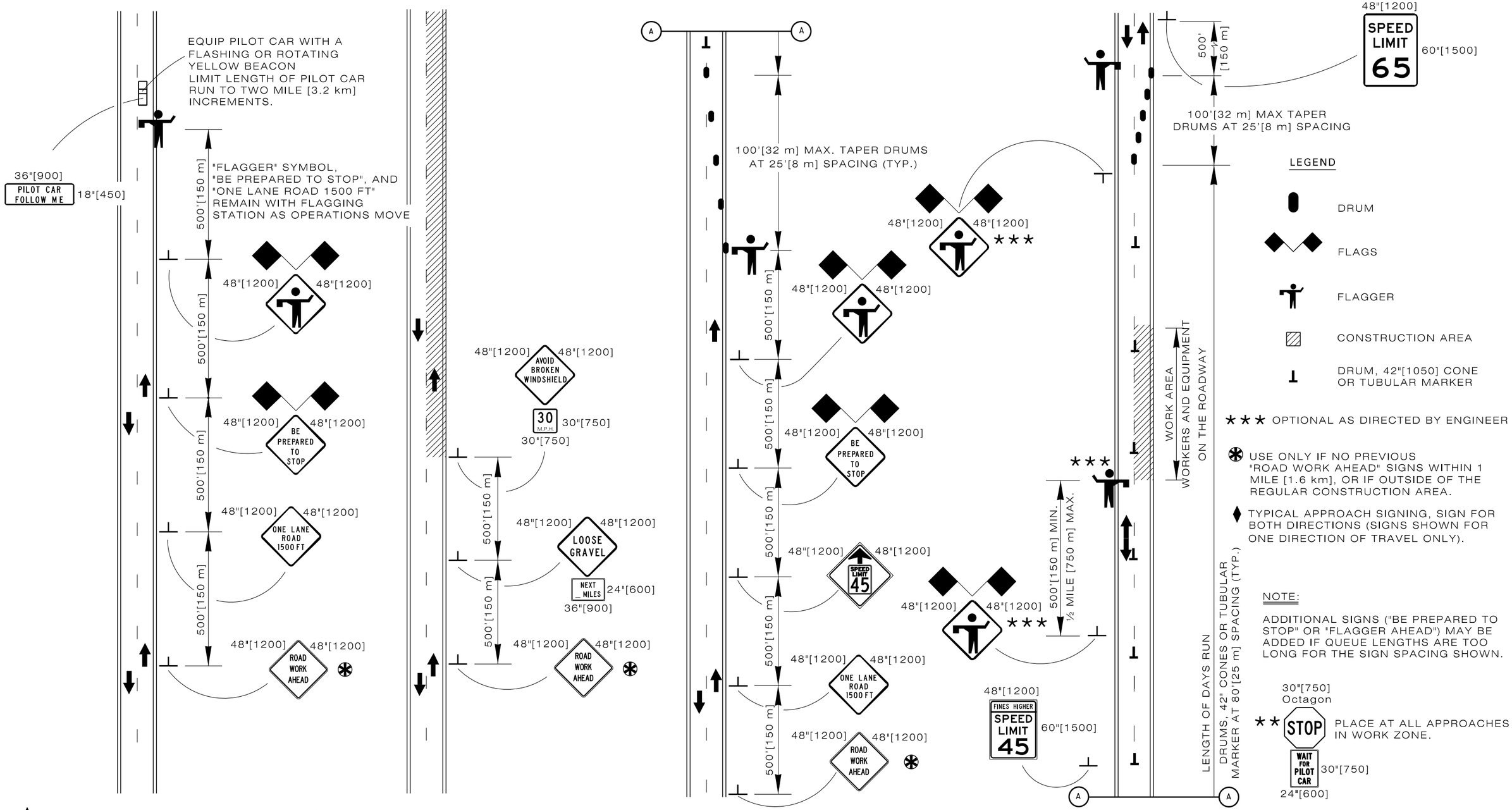

♦ **PILOT CAR OPERATIONS MOBILE OR STATIONARY WORK SITE**

♦ **ROADWAY CHIP SEALING**

♦ **OPERATIONS FOR ONE LANE CLOSURE ON A TWO LANE ROAD**

Designed by: TRAFFIC	
Drawn by: JTG	
Checked by: TRAFFIC	
Previous Dwg. No. 703-2D	TYPICAL TRAFFIC CONTROL SIGNING

Note: Units shown in brackets [ ] are metric and are in millimeters (mm) unless other units are shown.

WYOMING DEPARTMENT OF TRANSPORTATION

CONSTRUCTION TRAFFIC CONTROL TWO LANE

STANDARD PLAN

STANDARD PLAN NUMBER
703-2E
SHEET 3 of 6
Issued by: TRAFFIC PROGRAM
Date Issued: OCTOBER, 2014

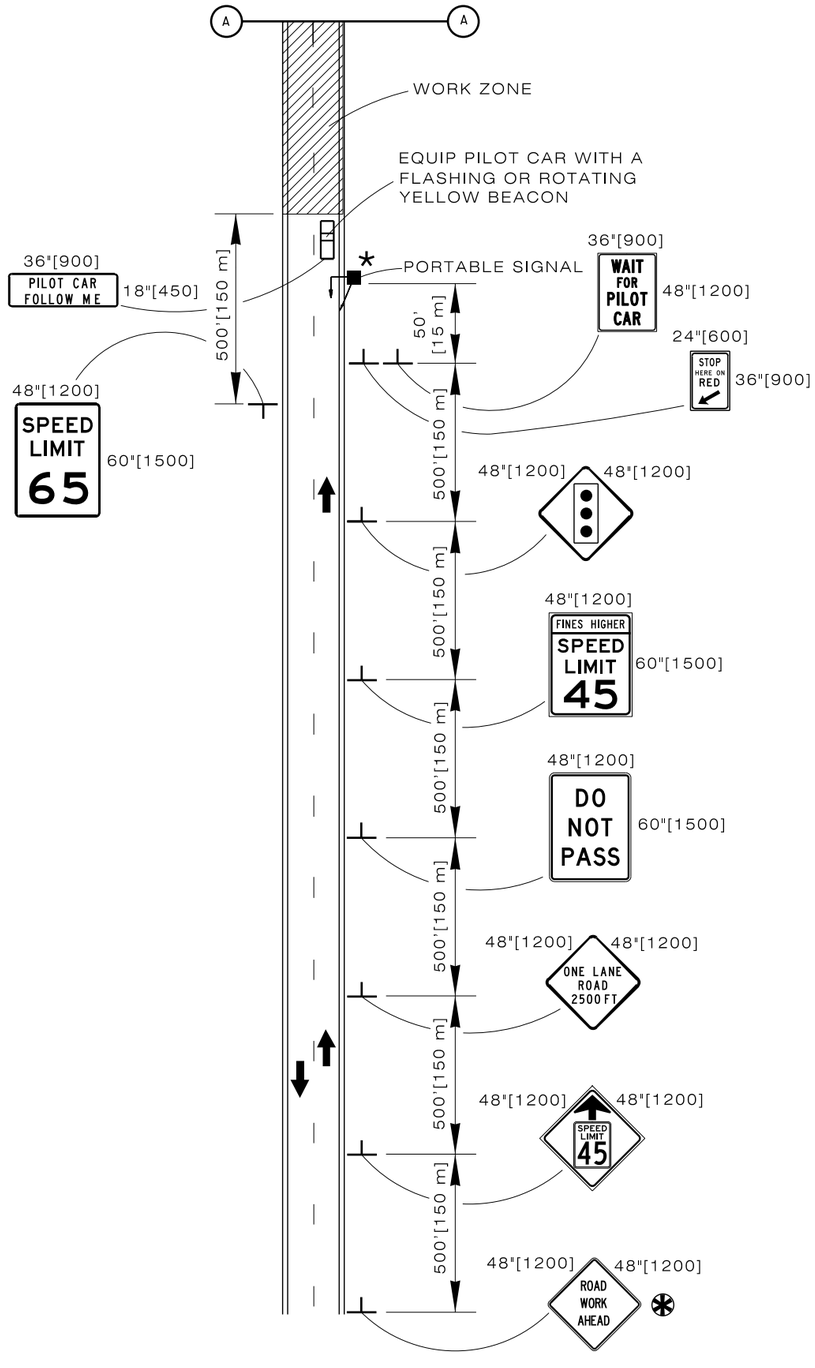

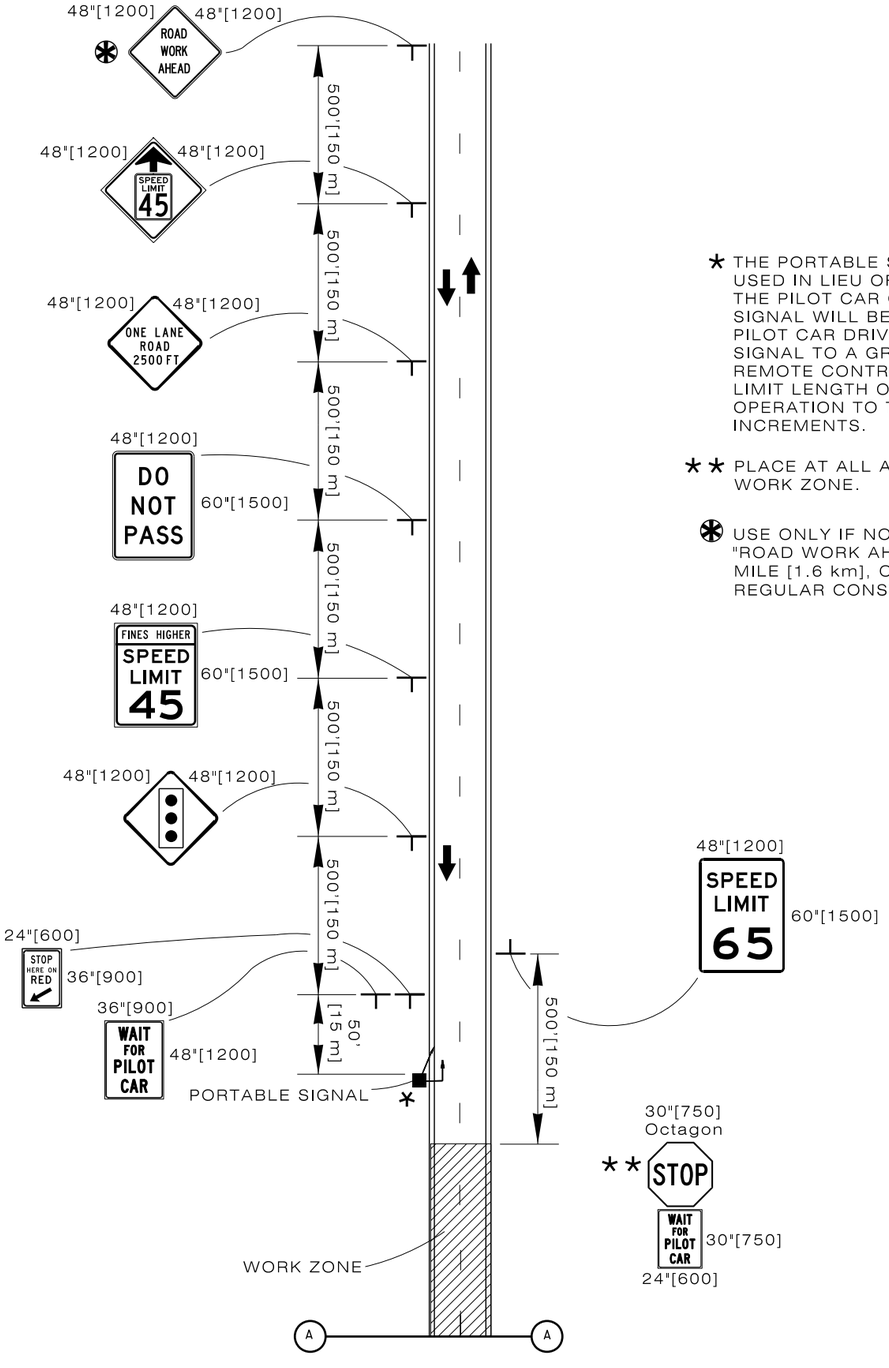

* THE PORTABLE SIGNAL MAY BE USED IN LIEU OF FLAGGERS FOR THE PILOT CAR OPERATION. THE SIGNAL WILL BE RED UNTIL THE PILOT CAR DRIVER CHANGES THE SIGNAL TO A GREEN LIGHT WITH REMOTE CONTROL.
LIMIT LENGTH OF PILOT CAR OPERATION TO TWO MILE [3.2 km] INCREMENTS.

** PLACE AT ALL APPROACHES IN WORK ZONE.

✻ USE ONLY IF NO PREVIOUS "ROAD WORK AHEAD" SIGNS WITHIN 1 MILE [1.6 km], OR IF OUTSIDE OF THE REGULAR CONSTRUCTION AREA.

Designed by:	TRAFFIC
Drawn by:	JTG
Checked by:	TRAFFIC
Previous Dwg. No.	703-2D

TYPICAL SIGNING FOR PILOT CAR WITH PORTABLE SIGNAL

Note: Units shown in brackets [ ] are metric and are in millimeters (mm) unless other units are shown.

WYOMING DEPARTMENT OF TRANSPORTATION

CONSTRUCTION TRAFFIC CONTROL TWO LANE

STANDARD PLAN

STANDARD PLAN NUMBER
703-2E
SHEET 4 of 6
Issued by: TRAFFIC PROGRAM
Date Issued: OCTOBER, 2014

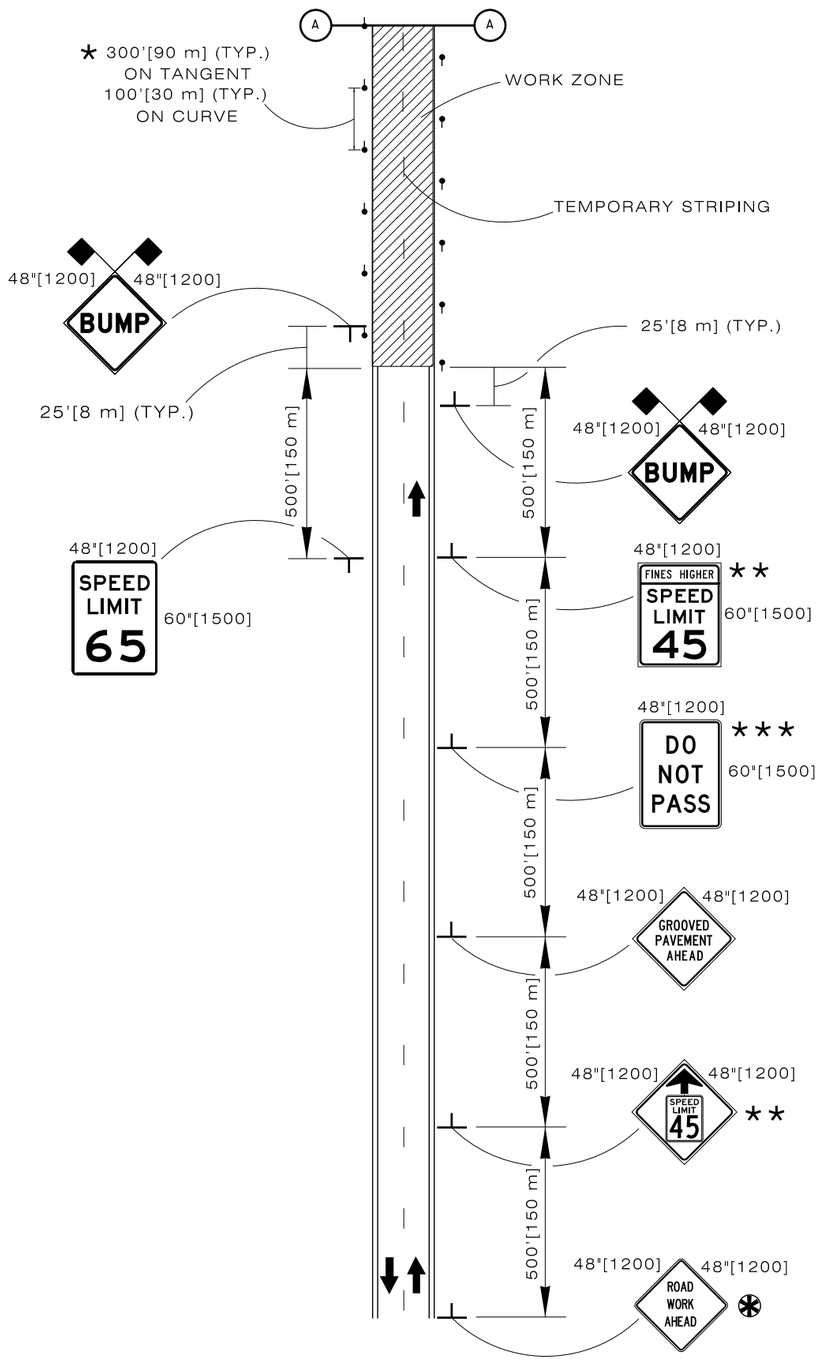

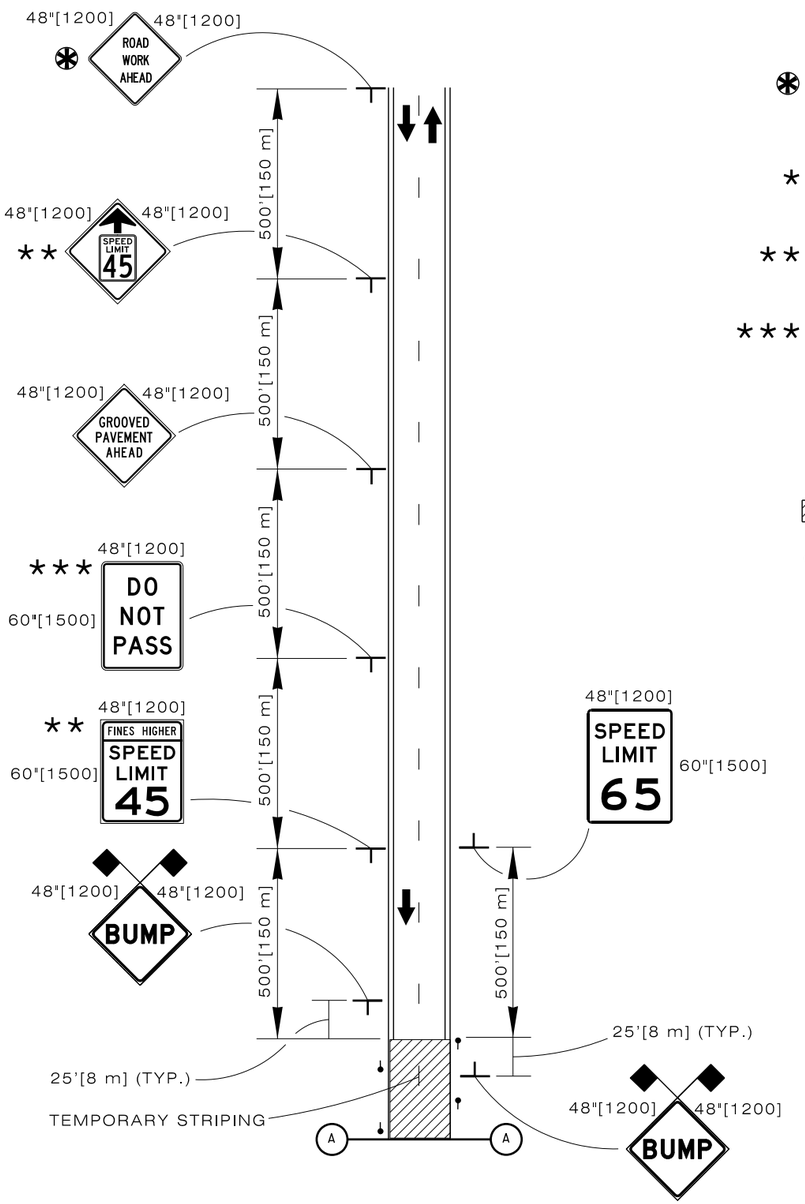

* USE ONLY IF NO PREVIOUS "ROAD WORK AHEAD" SIGNS WITHIN 1 MILE [1.6 km], OR IF OUTSIDE OF THE REGULAR CONSTRUCTION AREA.

* USE TUBULAR MARKERS IN PLACE OF DELINEATORS WHERE DELINEATORS ARE NOT PRESENT.

** SPEED LIMIT TO BE DETERMINED BY THE ENGINEER ACCORDING TO THE CONDITION OF THE MILLED SURFACE.

*** USE IF BARRIERS ARE NOT MARKED.

LEGEND

GROOVED (MILLED) SURFACE

EXISTING DELINEATORS OR TUBULAR MARKERS

Designed by: TRAFFIC	
Drawn by: JTG	
Checked by: TRAFFIC	
Previous Dwg. No. 703-2D	

TYPICAL SIGNING FOR GROOVED (MILLED) PAVEMENT

Note: Units shown in brackets [ ] are metric and are in millimeters (mm) unless other units are shown.

WYOMING DEPARTMENT OF TRANSPORTATION

CONSTRUCTION TRAFFIC CONTROL TWO LANE

STANDARD PLAN

STANDARD PLAN NUMBER
703-2E
SHEET 5 of 6
Issued by: TRAFFIC PROGRAM
Date Issued: OCTOBER, 2014

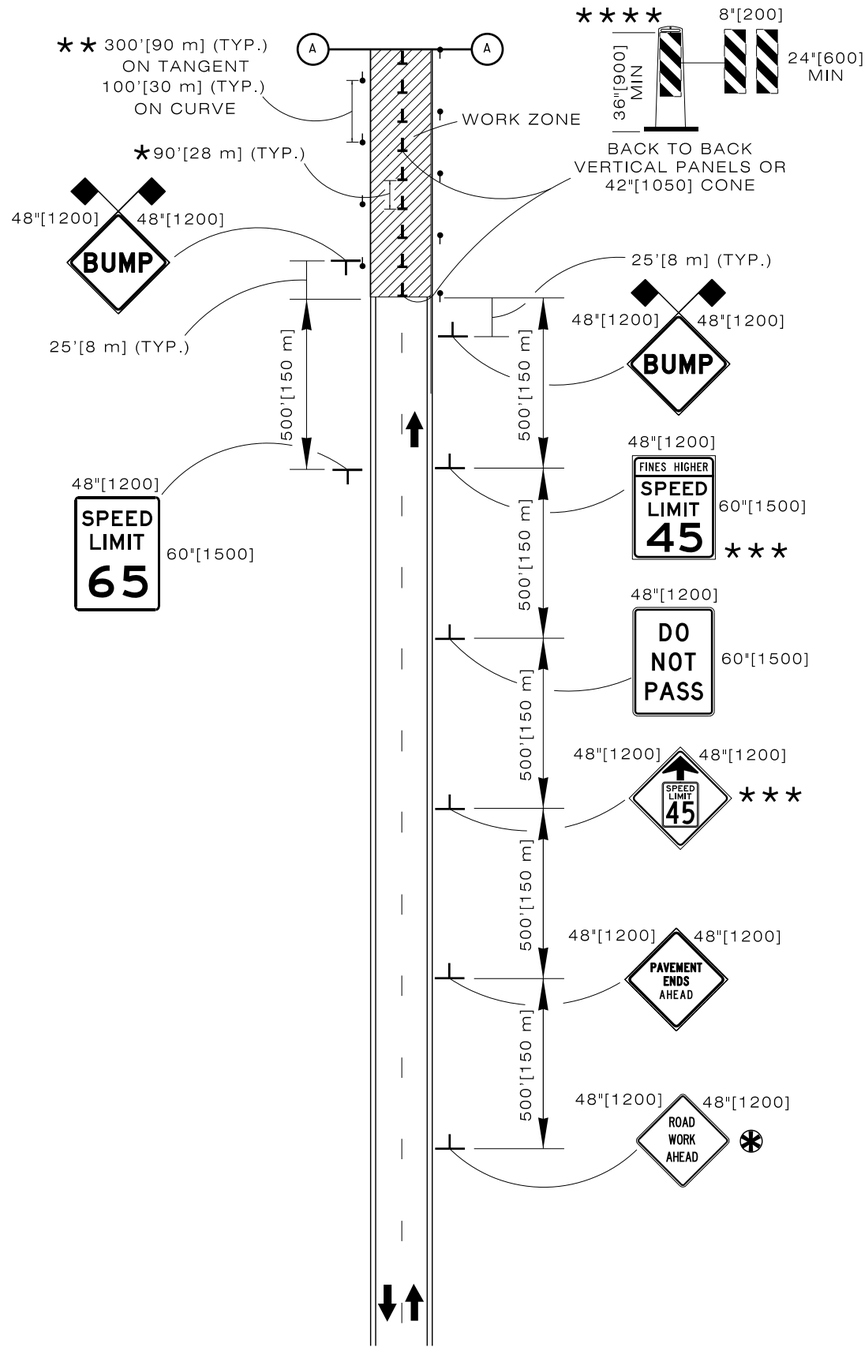

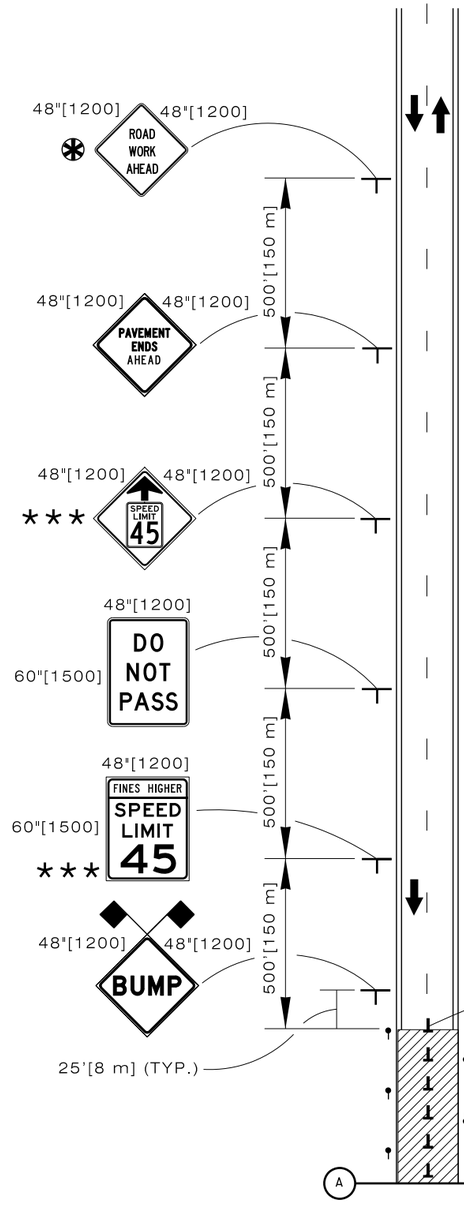

✻ USE ONLY IF NO PREVIOUS "ROAD WORK AHEAD" SIGNS WITHIN 1 MILE [1.6 km], OR IF OUTSIDE OF THE REGULAR CONSTRUCTION AREA.

★ TUBULAR MARKERS MAY BE USED IN PLACE OF 42"[1050] CONES OR VERTICAL PANELS DURING DAY TIME OPERATIONS ONLY.

★★ USE TUBULAR MARKERS IN PLACE OF DELINEATORS WHERE DELINEATORS ARE NOT PRESENT.

★★★ SPEED LIMIT TO BE DETERMINED BY THE ENGINEER ACCORDING TO THE CONDITION OF THE UNPAVED SURFACE.

★★★★ REQUIRED IF SPECIFIED IN CONTRACT.

LEGEND

- DIRT SURFACE
- VERTICAL PANELS OR 42"[1050] CONE
- EXISTING DELINEATORS OR TUBULAR MARKERS

Designed by:	TRAFFIC
Drawn by:	JTG
Checked by:	TRAFFIC
Previous Dwg. No.	703-2D

TYPICAL SIGNING FOR UNPAVED SURFACE

Note: Units shown in brackets [ ] are metric and are in millimeters (mm) unless other units are shown.

WYOMING DEPARTMENT OF TRANSPORTATION

CONSTRUCTION TRAFFIC CONTROL TWO LANE

STANDARD PLAN

STANDARD PLAN NUMBER
703-2E
SHEET 6 of 6
Issued by: TRAFFIC PROGRAM
Date Issued: OCTOBER, 2014

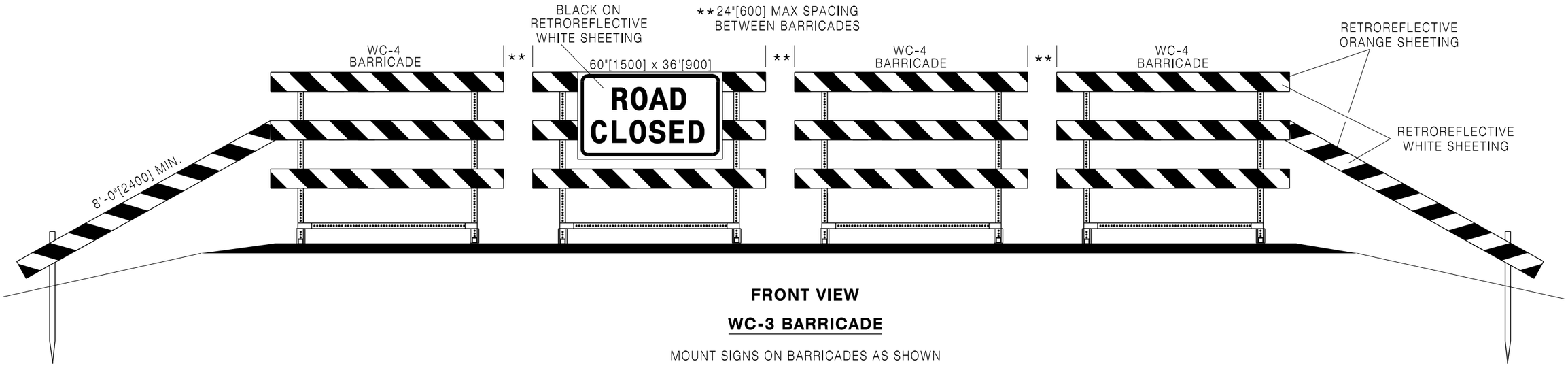

FRONT VIEW

WC-3 BARRICADE

MOUNT SIGNS ON BARRICADES AS SHOWN

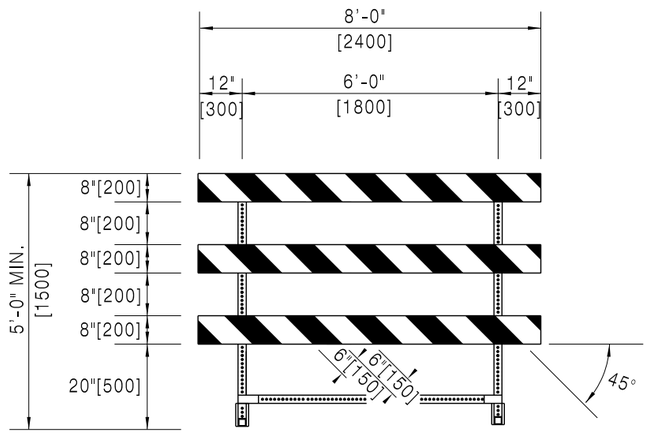

FRONT VIEW

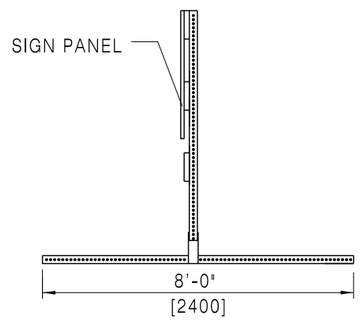

SIDE VIEW

NOTES:

1. Submit support design modifications to the engineer for approval.
2. Slope stripes on WC-3 and WC-4 barricades downward towards the travel way or in the direction which traffic moves when moving by the barricade.

WC-4 BARRICADE

Designed by: TRAFFIC Drawn by: JTG Checked by: TRAFFIC Previous Dwg. No. 703-1E	WC-3 AND WC-4 BARRICADES	WYOMING DEPARTMENT OF TRANSPORTATION	CONSTRUCTION TRAFFIC CONTROL DEVICES STANDARD PLAN	STANDARD PLAN NUMBER 703-1F SHEET 1 of 12 Issued by: TRAFFIC PROGRAM Date Issued: OCTOBER, 2014

Note: Units shown in brackets [ ] are metric and are in millimeters (mm) unless other units are shown.

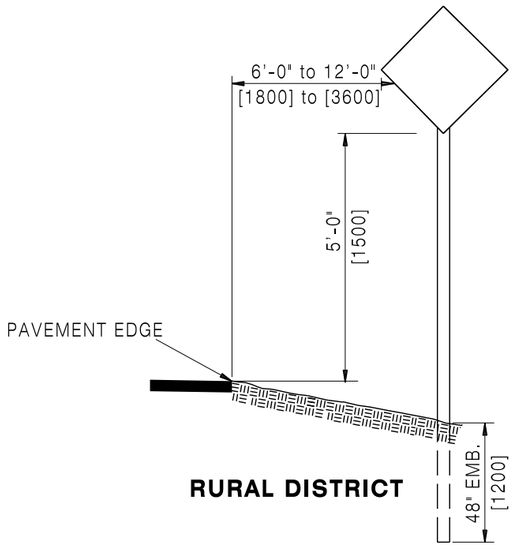

RURAL DISTRICT

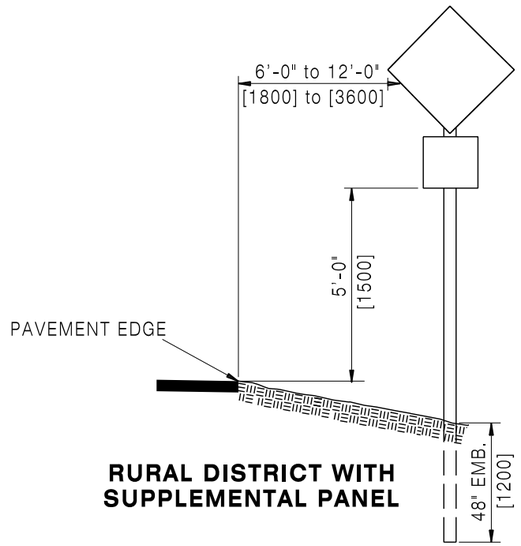

RURAL DISTRICT WITH SUPPLEMENTAL PANEL

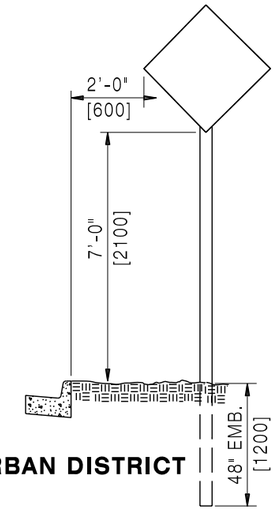

URBAN DISTRICT

SIGN PLACEMENT

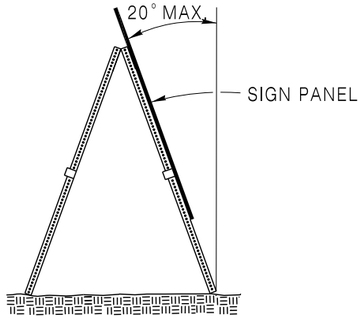

SIDE VIEW

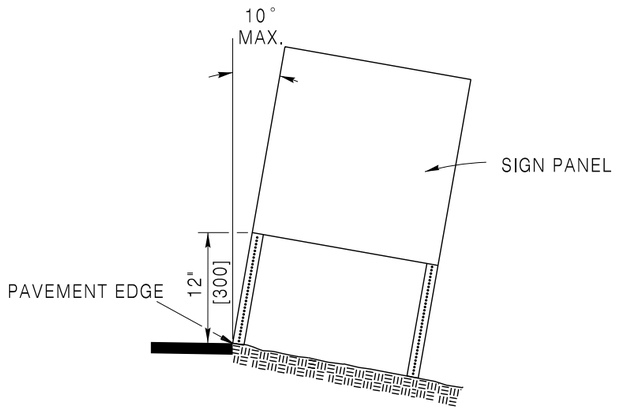

FRONT VIEW

PORTABLE SIGN SUPPORT ORIENTATION

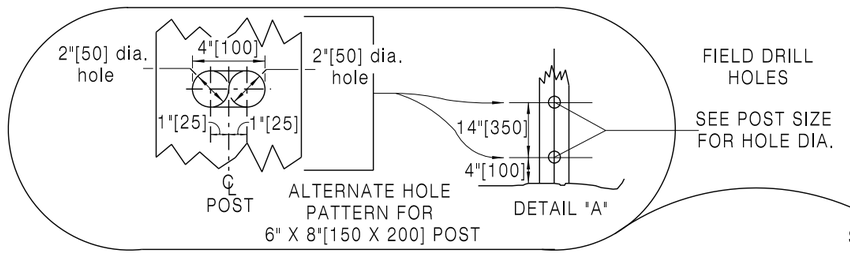

POST SIZE	HOLE DIA.
4" x 4"[100 X 100]	1"[25] Ø
4" x 6"[100 X 150]	2"[50] Ø
6" x 6"[150 X 150]	2 1/2"[64] Ø
6" x 8"[150 X 200]	4"[100] Ø

SIDE

FRONT

BREAK-AWAY TIMBER POST DETAIL

Designed by: TRAFFIC
Drawn by: JTG
Checked by: TRAFFIC
Previous Dwg. No. 703-1E

MISCELLANEOUS SIGNING DETAILS

Note: Units shown in brackets [ ] are metric and are in millimeters (mm) unless other units are shown.

WYOMING DEPARTMENT OF TRANSPORTATION

CONSTRUCTION TRAFFIC CONTROL DEVICES

STANDARD PLAN

STANDARD PLAN NUMBER
703-1F
SHEET 2 of 12
Issued by: TRAFFIC PROGRAM
Date Issued: OCTOBER, 2014

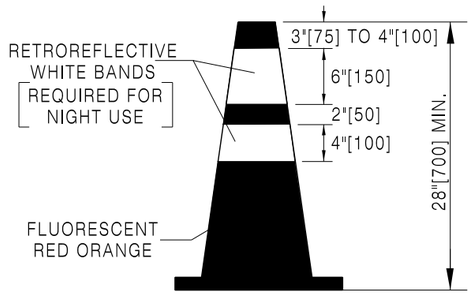

CONE

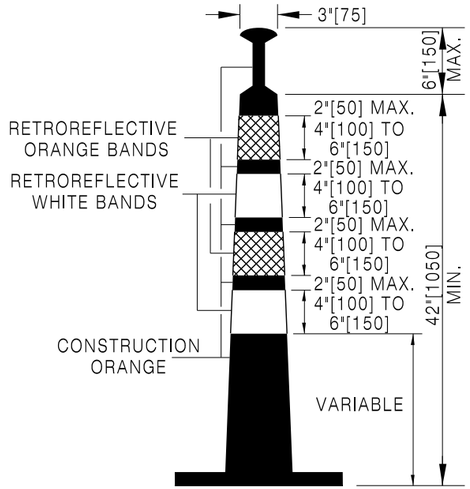

42"[1050] CONE

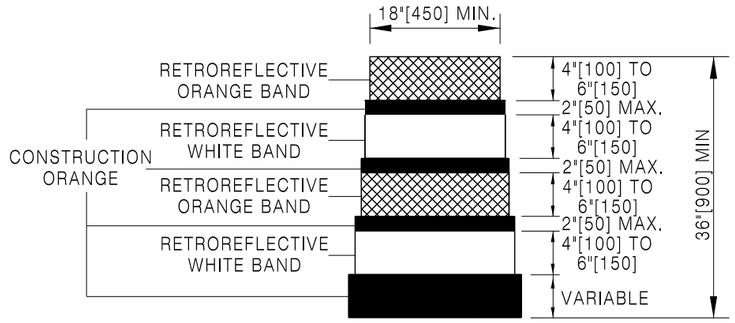

DRUM

CHANNELIZING DEVICES

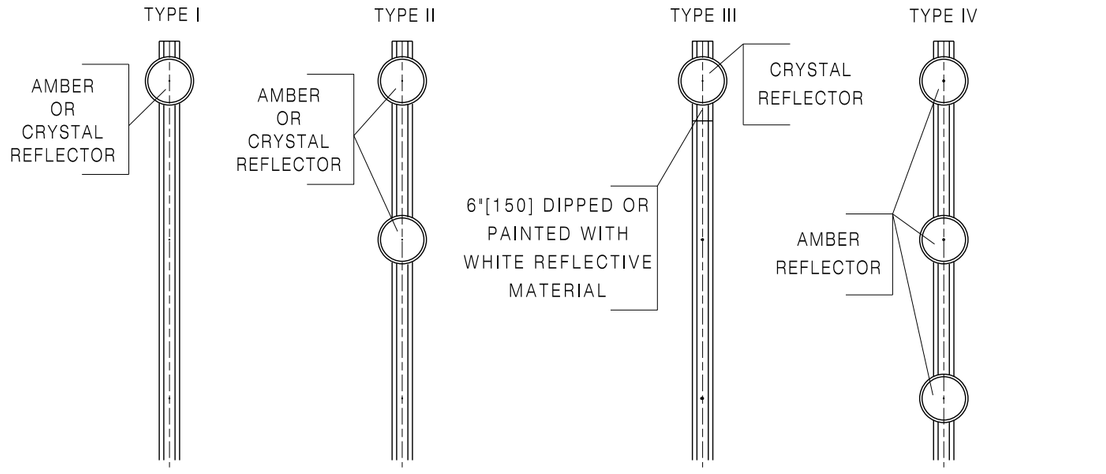

DELINEATORS

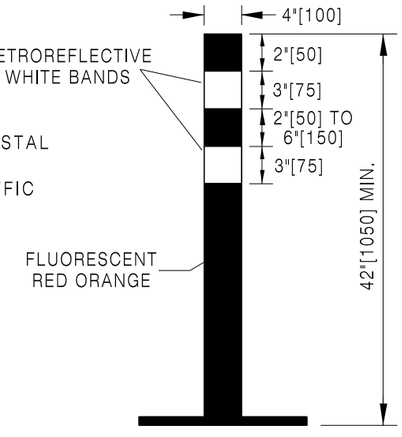

TUBULAR MARKER

DELINEATING DEVICES

Designed by: TRAFFIC	CHANNELIZING AND DELINEATING DEVICES
Drawn by: JTG	
Checked by: TRAFFIC	
Previous Dwg. No. 703-1E	

Note: Units shown in brackets [ ] are metric and are in millimeters (mm) unless other units are shown.

WYOMING DEPARTMENT OF TRANSPORTATION

CONSTRUCTION TRAFFIC CONTROL DEVICES

STANDARD PLAN

STANDARD PLAN NUMBER
703-1F
SHEET 3 of 12
Issued by: TRAFFIC PROGRAM
Date Issued: OCTOBER, 2014

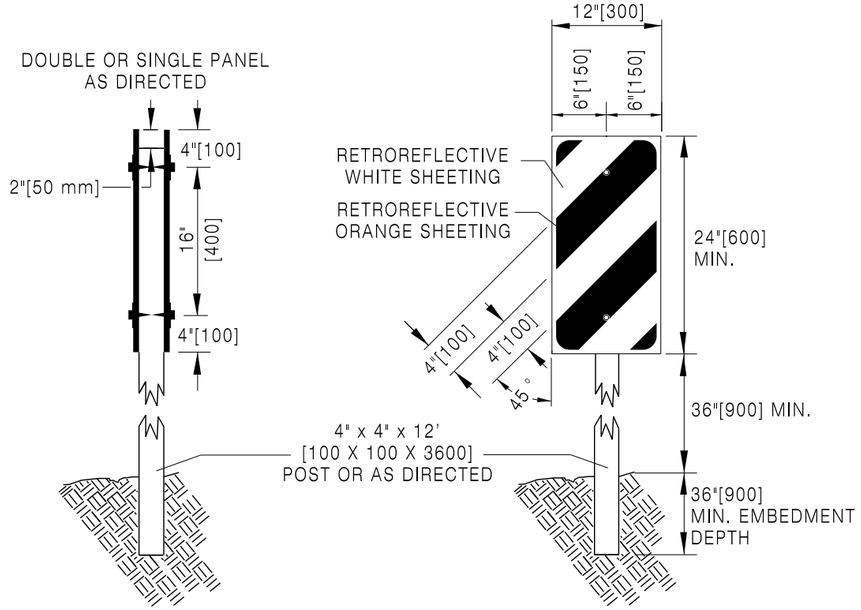

VERTICAL PANELS

Mount vertical panels on wood posts using 1/4 in.[6] X 2 1/2 in.[64] galvanized lag screws and flat washers.

Slope stripes on vertical panels downward towards the travel way or in the direction which traffic moves when moving by the marker.

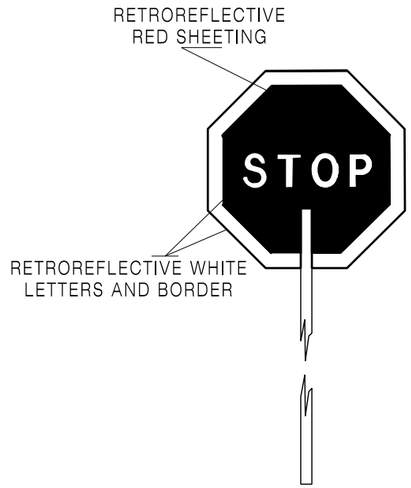

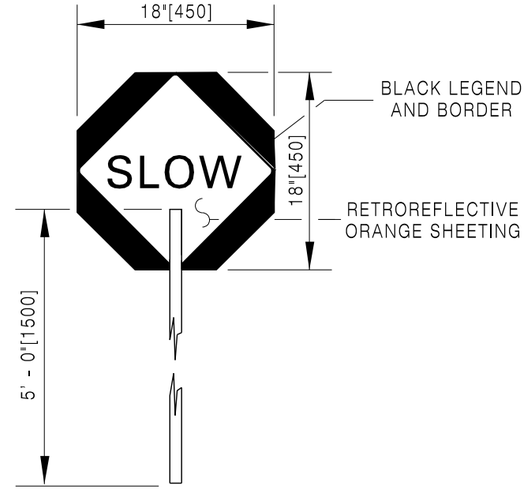

STOP-SLOW PADDLE

LEFT,RIGHT OR DOUBLE ARROW (AS DIRECTED)

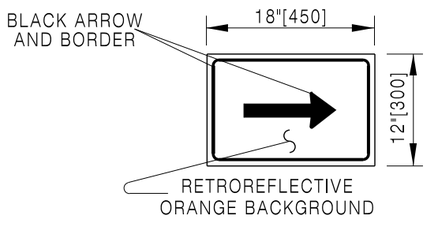

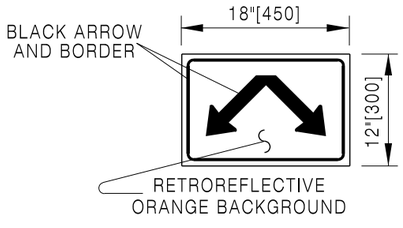

DIRECTIONAL ARROWS

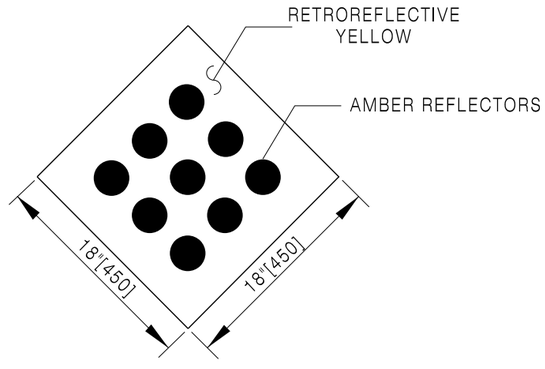

TYPE 1 OBJECT MARKER

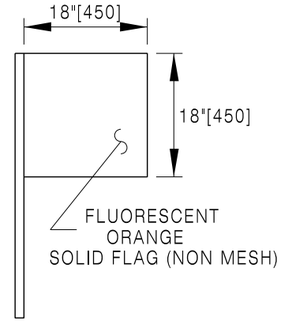

SIGN FLAG DETAIL

Designed by: TRAFFIC Drawn by: JTG Checked by: TRAFFIC Previous Dwg. No. 703-1E	MISCELLANEOUS SIGNING DETAILS	WYOMING DEPARTMENT OF TRANSPORTATION	CONSTRUCTION TRAFFIC CONTROL DEVICES STANDARD PLAN

Note: Units shown in brackets [ ] are metric and are in millimeters (mm) unless other units are shown.

STANDARD PLAN NUMBER
703-1F
SHEET 4 of 12
Issued by: TRAFFIC PROGRAM
Date Issued: OCTOBER, 2014

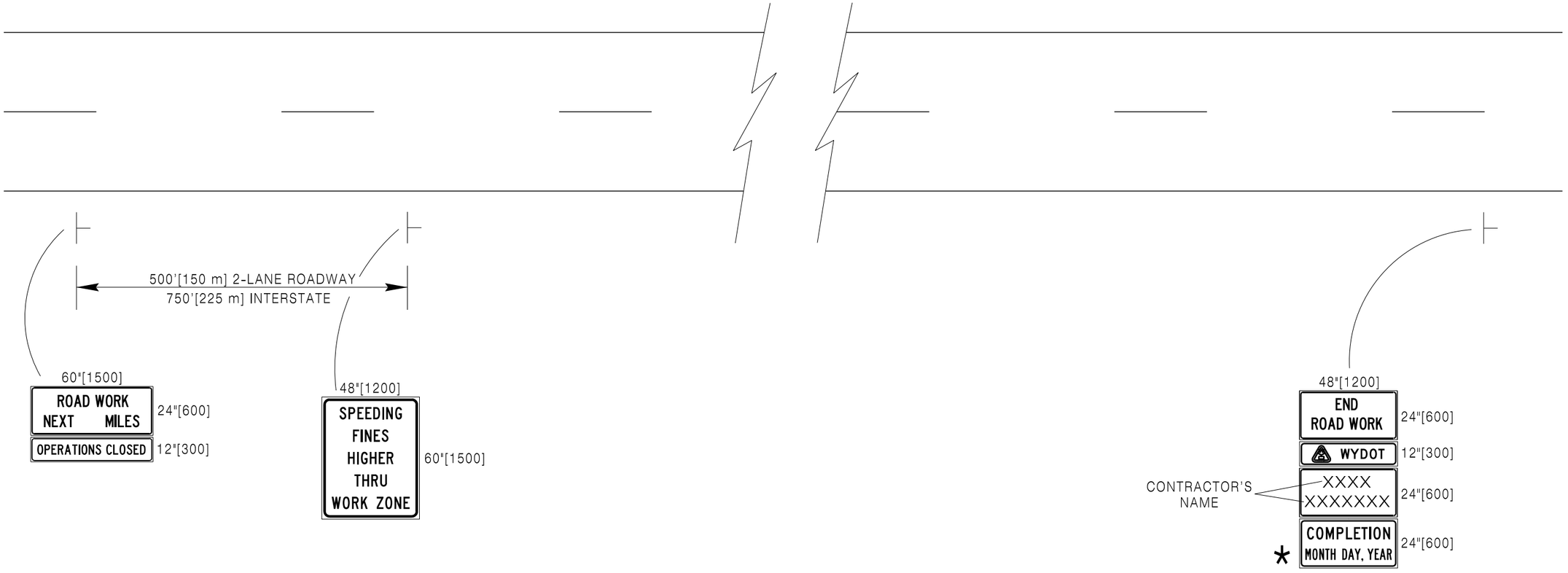

NOTES:

Do not obstruct or detract from the effectiveness of standard construction or permanent signs with these signs. Place signs **500'[150 m] or 750'[225 m]** in advance of any construction or permanent signing. Do not substitute these signs for construction warning or regulatory signs.

Use "OPERATIONS CLOSED" sign as directed by the engineer, when construction ceases for the winter or other periods of suspension.

* This sign signifies the date the project is to be completed. The TRAFFIC PROGRAM of WYDOT furnishes, upon request of the contractor, sign fabrication layout sheets.

Designed by: TRAFFIC Drawn by: JTG Checked by: TRAFFIC Previous Dwg. No. 703-1E	BEGINNING AND ENDING CONSTRUCTION ZONE SIGNING	WYOMING DEPARTMENT OF TRANSPORTATION	CONSTRUCTION TRAFFIC CONTROL DEVICES STANDARD PLAN	STANDARD PLAN NUMBER 703-1F SHEET 5 of 12 Issued by: TRAFFIC PROGRAM Date Issued: OCTOBER, 2014

Note: Units shown in brackets [ ] are metric and are in millimeters (mm) unless other units are shown.

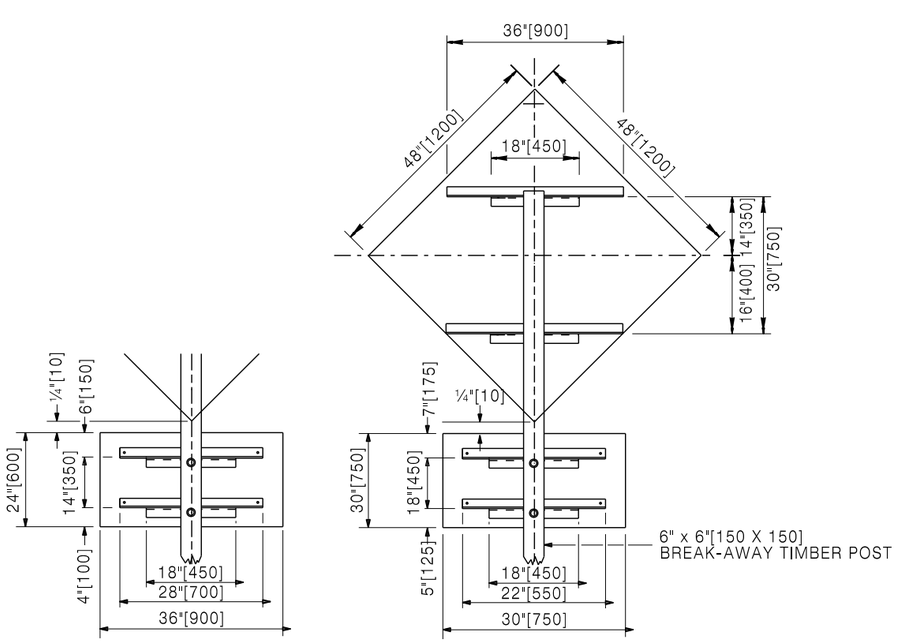

S-1 AND S-1A

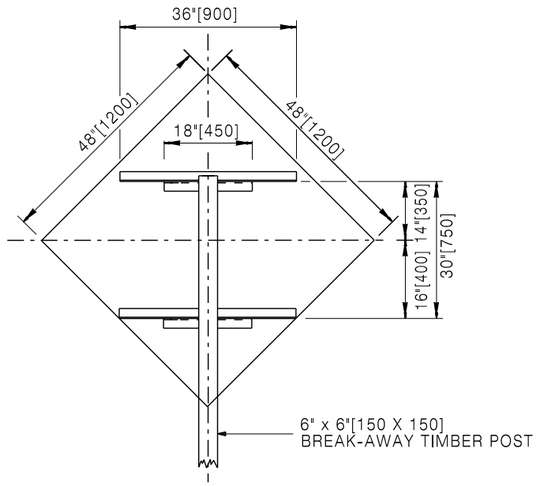

S-2 AND S-2A

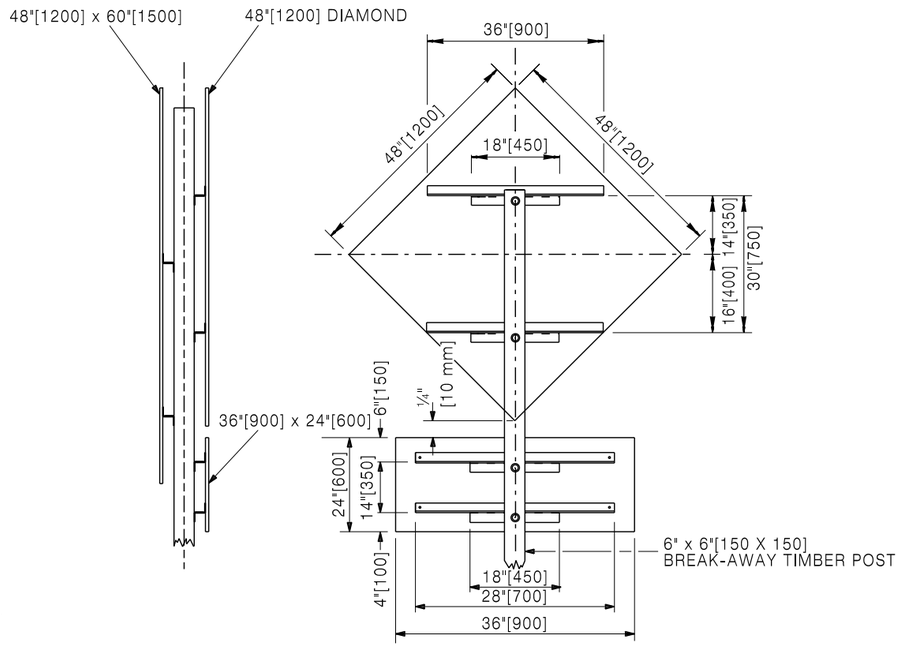

S-3

NOTE:
BACKING ANGLES ARE NOT REQUIRED FOR ONE PIECE 0.125 ALUMINUM OR 1/2" PLYWOOD SIGN PANELS 48" X 60" OR SMALLER.

Designed by: TRAFFIC Drawn by: JTG Checked by: TRAFFIC Previous Dwg. No. 703-1E	SIGN STRUCTURE DETAILS	WYOMING DEPARTMENT OF TRANSPORTATION	**CONSTRUCTION TRAFFIC CONTROL DEVICES** STANDARD PLAN

Note: Units shown in brackets [ ] are metric and are in millimeters (mm) unless other units are shown.

STANDARD PLAN NUMBER
703-1F
SHEET 6 of 12
Issued by: TRAFFIC PROGRAM
Date Issued: OCTOBER, 2014

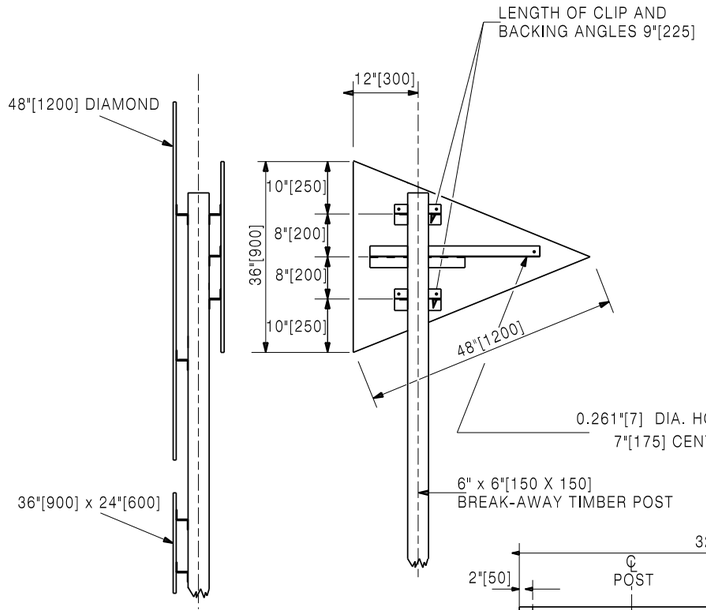

S-4

BACKING ANGLE DETAIL

2" x 2" x 3/16"
[51 X 51 X 4.8]

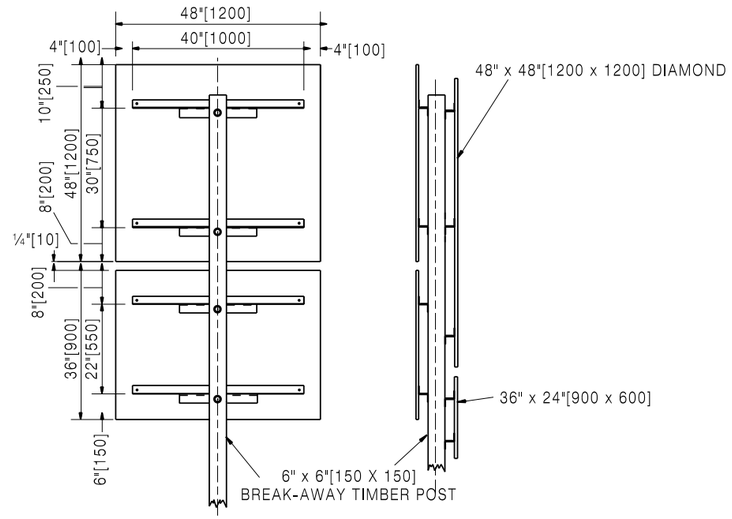

S-5

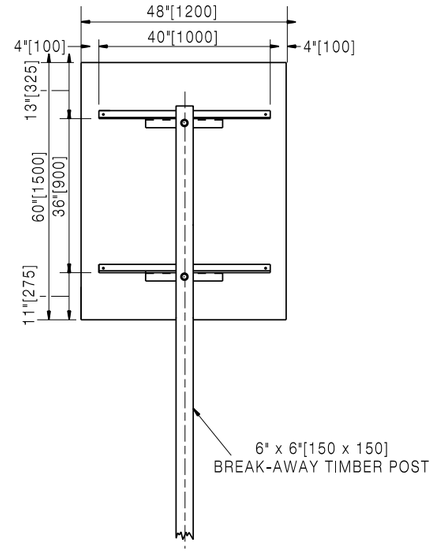

S-6

NOTE:
BACKING ANGLES ARE NOT REQUIRED FOR ONE PIECE 0.125 ALUMINUM OR 1/2" PLYWOOD SIGN PANELS 48" X 60" OR SMALLER.

Designed by: TRAFFIC Drawn by: JTG Checked by: TRAFFIC Previous Dwg. No. 703-1E	SIGN STRUCTURE DETAILS	WYOMING DEPARTMENT OF TRANSPORTATION	**CONSTRUCTION TRAFFIC CONTROL DEVICES** STANDARD PLAN	STANDARD PLAN NUMBER **703-1F** SHEET 7 of 12 Issued by: TRAFFIC PROGRAM Date Issued: OCTOBER, 2014

Note: Units shown in brackets [ ] are metric and are in millimeters (mm) unless other units are shown.

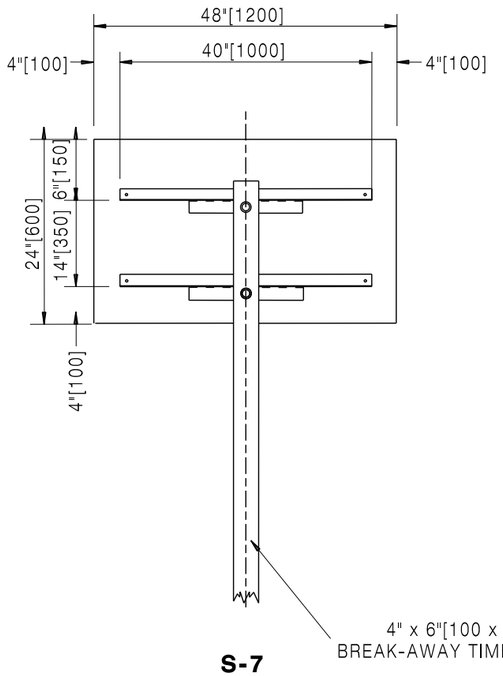

S-7

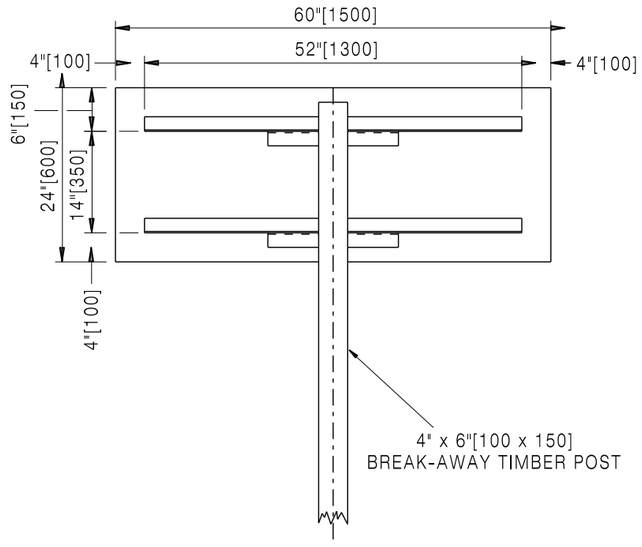

S-10

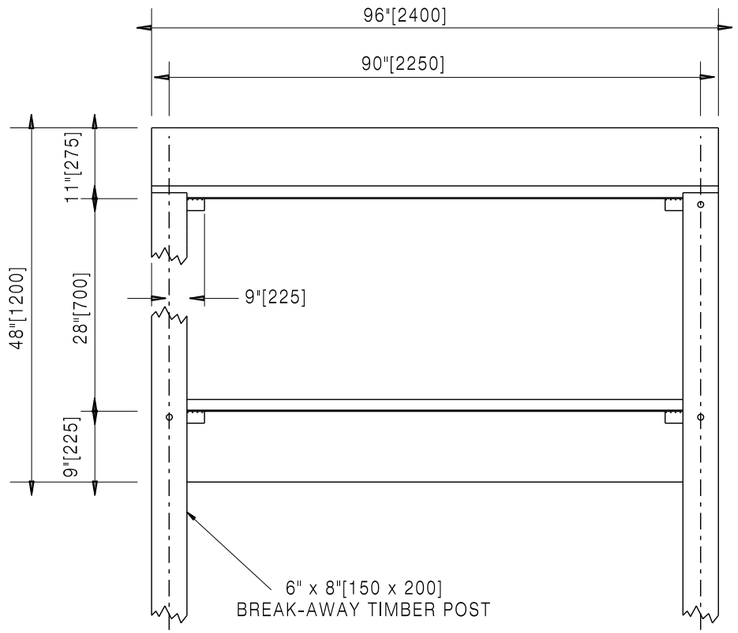

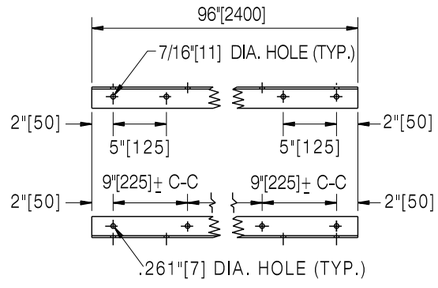

BACKING ANGLE
DETAIL

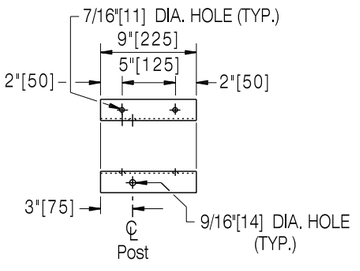

9"[225] CLIP ANGLE
DETAIL

S-11

NOTE:
BACKING ANGLES ARE NOT REQUIRED FOR ONE PIECE 0.125 ALUMINUM OR 1/2" PLYWOOD SIGN PANELS 48" X 60" OR SMALLER.

Designed by: TRAFFIC Drawn by: JTG Checked by: TRAFFIC Previous Dwg. No. 703-1E	SIGN STRUCTURE DETAILS	WYOMING DEPARTMENT OF TRANSPORTATION	**CONSTRUCTION TRAFFIC CONTROL DEVICES** STANDARD PLAN

Note: Units shown in brackets [ ] are metric and are in millimeters (mm) unless other units are shown.

STANDARD PLAN NUMBER
703-1F
SHEET 8 of 12
Issued by: TRAFFIC PROGRAM
Date Issued: OCTOBER, 2014

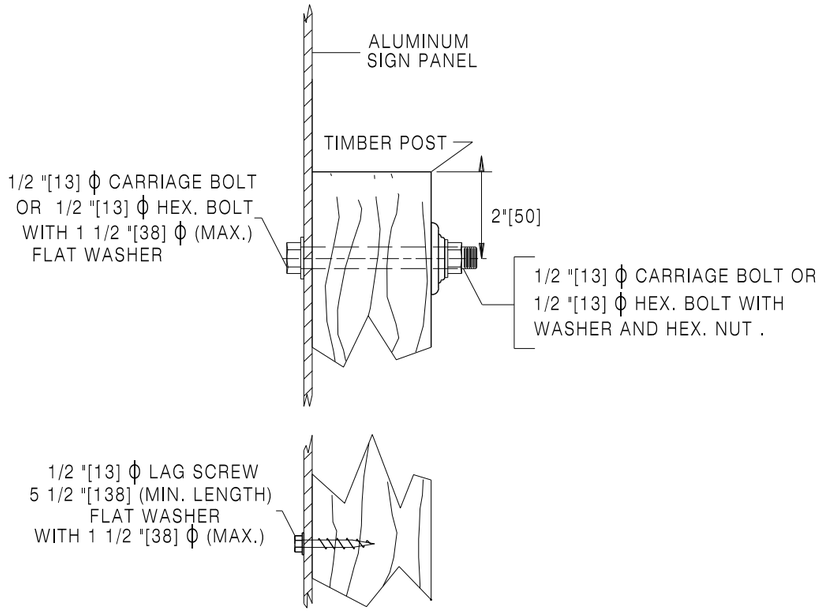

PANEL MOUNTING
SIDE VIEW ALUMINUM
WITHOUT BACKING ANGLES

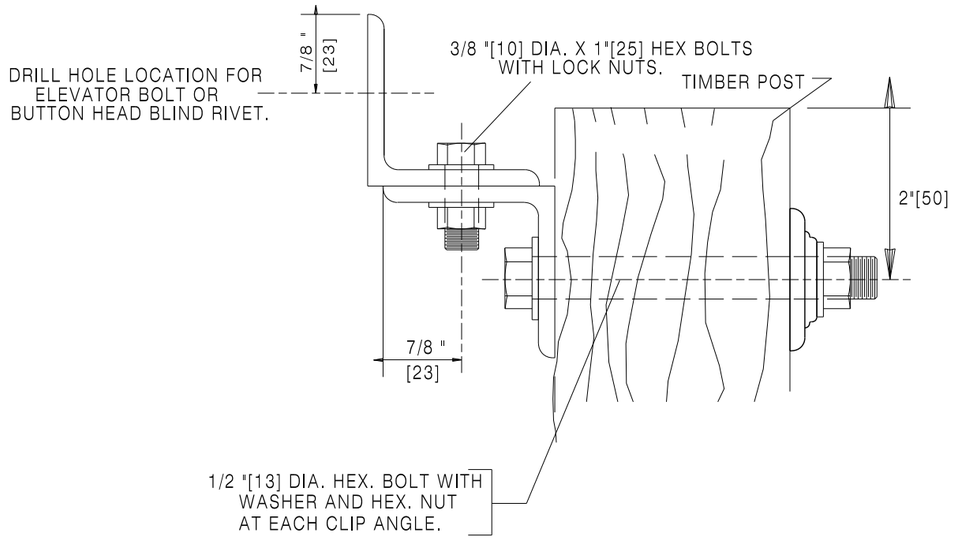

BACKING ANGLE AND CLIP ANGLE
MOUNTING DETAIL

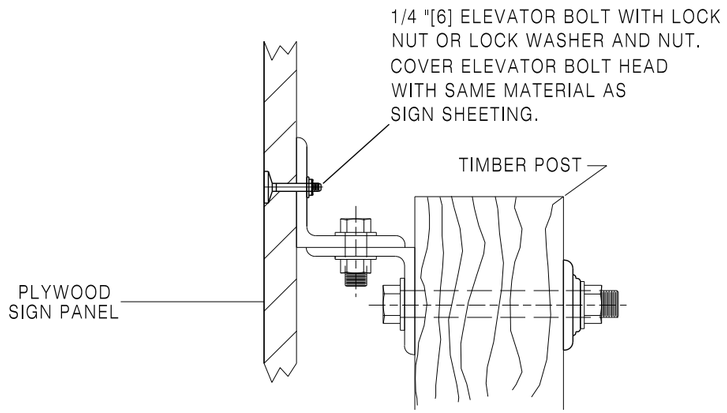

PANEL MOUNTING
SIDE VIEW PLYWOOD

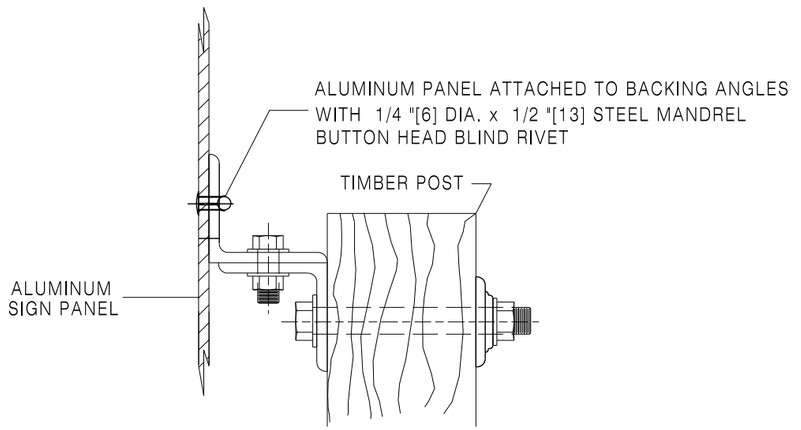

PANEL MOUNTING
SIDE VIEW ALUMINUM

Designed by: TRAFFIC	SIGN STRUCTURE DETAILS
Drawn by: JTG	
Checked by: TRAFFIC	
Previous Dwg. No. 703-1E	

Note: Units shown in brackets [ ] are metric and are in millimeters (mm) unless other units are shown.

WYOMING DEPARTMENT OF TRANSPORTATION

CONSTRUCTION TRAFFIC CONTROL DEVICES

STANDARD PLAN

STANDARD PLAN NUMBER
703-1F
SHEET 9 of 12
Issued by: TRAFFIC PROGRAM
Date Issued: OCTOBER, 2014

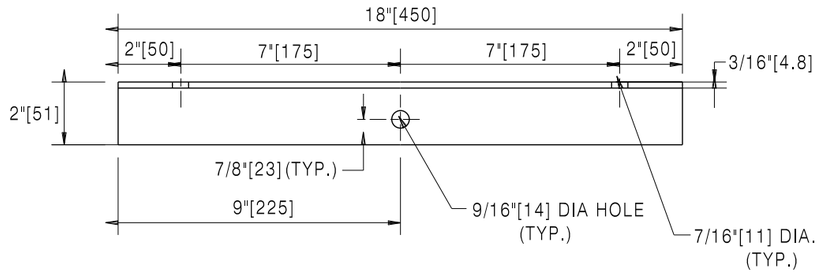

CLIP ANGLE

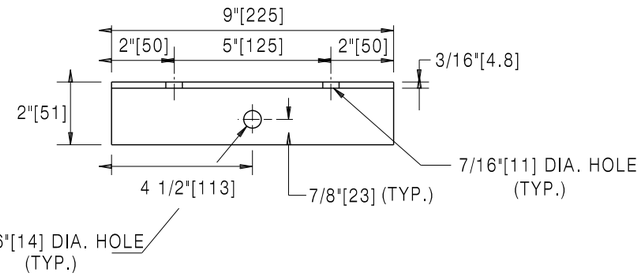

CLIP ANGLE

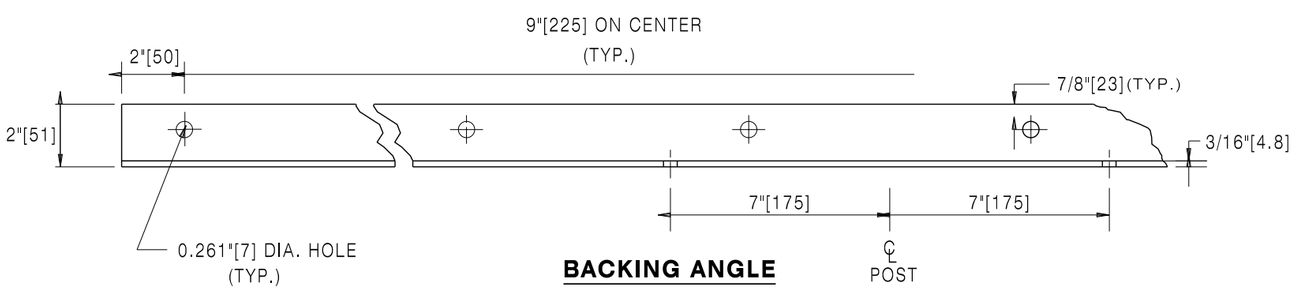

BACKING ANGLE

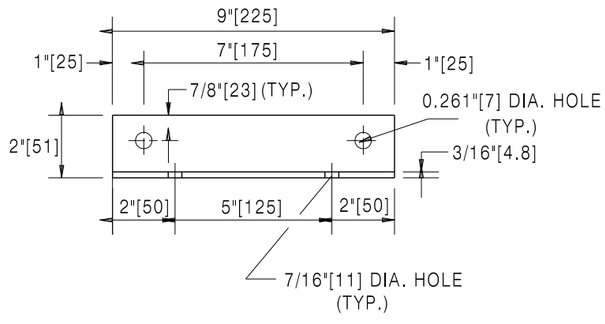

BACKING ANGLE

BACKING ANGLE OR CLIP ANGLE DETAILS

Designed by: TRAFFIC Drawn by: JTG Checked by: TRAFFIC Previous Dwg. No. 703-1E	SIGN STRUCTURE DETAILS	WYOMING DEPARTMENT OF TRANSPORTATION	**CONSTRUCTION TRAFFIC CONTROL DEVICES** STANDARD PLAN
Note: Units shown in brackets [ ] are metric and are in millimeters (mm) unless other units are shown.			STANDARD PLAN NUMBER **703-1F** SHEET 10 of 12 Issued by: TRAFFIC PROGRAM Date Issued: OCTOBER, 2014

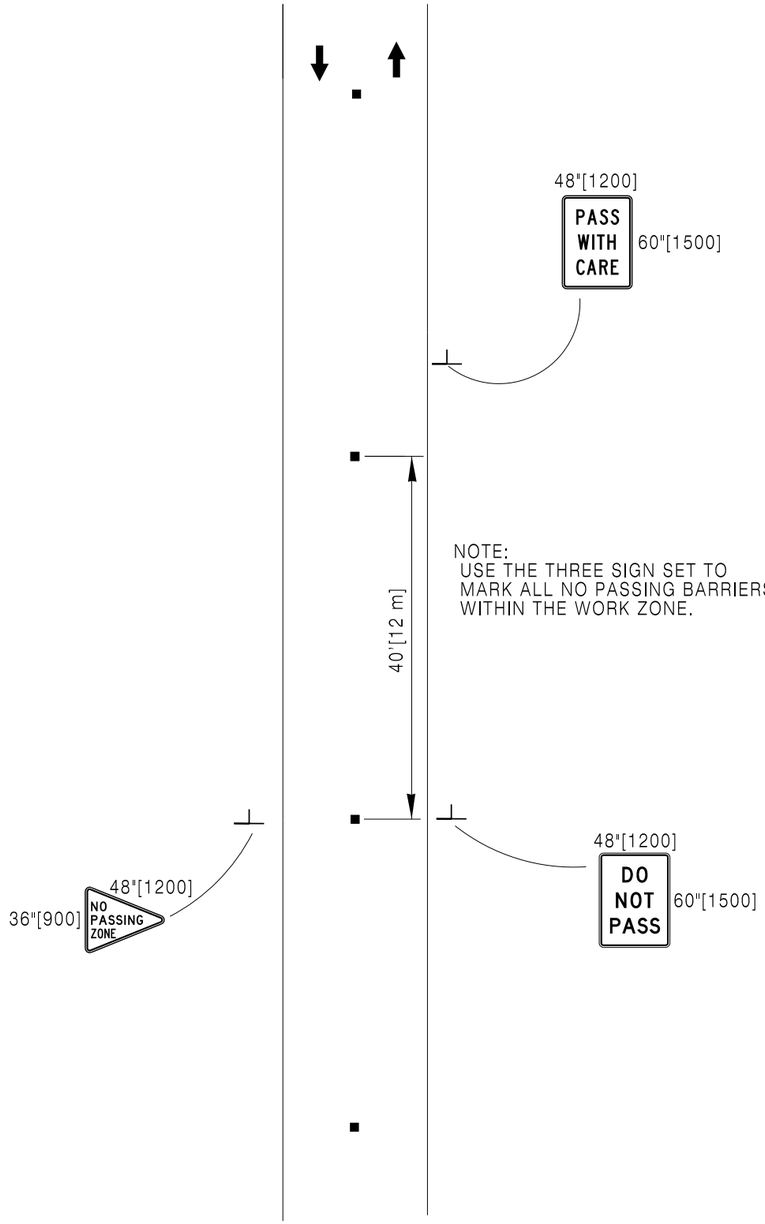

2 LANE 2-WAY ROADWAYS USING RAISED PAVEMENT MARKERS OR MOTORIST GUIDANCE MARKERS, CENTERLINE AND THREE SIGN SEQUENCE, INCLUDING NO-PASSING ZONE

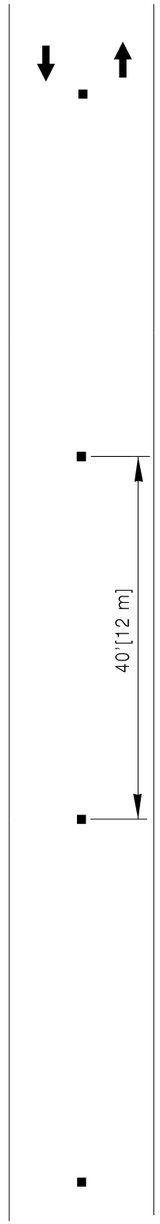

2 LANE 2-WAY ROADWAY (CENTER LINE) USING RAISED PAVEMENT MARKERS OR MOTORIST GUIDANCE MARKERS

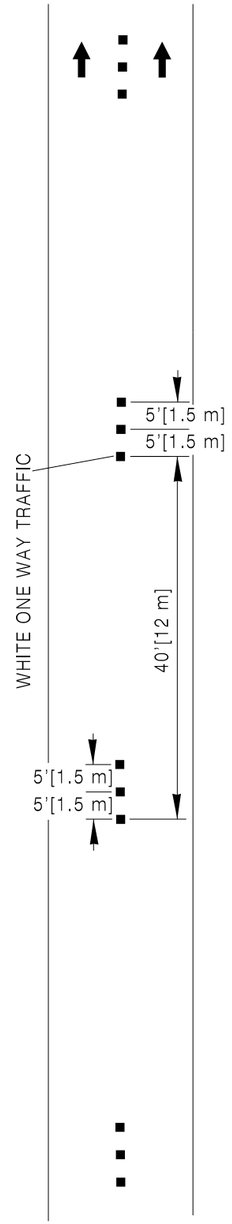

INTERSTATE (LANE LINE) USING RAISED PAVEMENT MARKERS

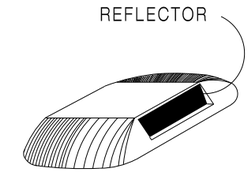

2" x 4"[50 x 100] TEMPORARY RAISED PAVEMENT MARKERS

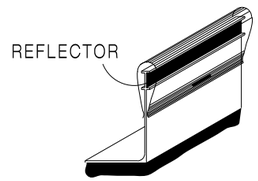

MOTORIST GUIDANCE MARKERS

LEGEND

■ TEMPORARY MARKERS

Designed by: TRAFFIC	FINAL SURFACE TREATMENT TEMPORARY PAVEMENT MARKERS
Drawn by: JTG	
Checked by: TRAFFIC	
Previous Dwg. No. 703-1E	

Note: Units shown in brackets [ ] are metric and are in millimeters (mm) unless other units are shown.

WYOMING DEPARTMENT OF TRANSPORTATION

CONSTRUCTION TRAFFIC CONTROL DEVICES

STANDARD PLAN

STANDARD PLAN NUMBER
703-1F
SHEET 11 of 12
Issued by: TRAFFIC PROGRAM
Date Issued: OCTOBER, 2014

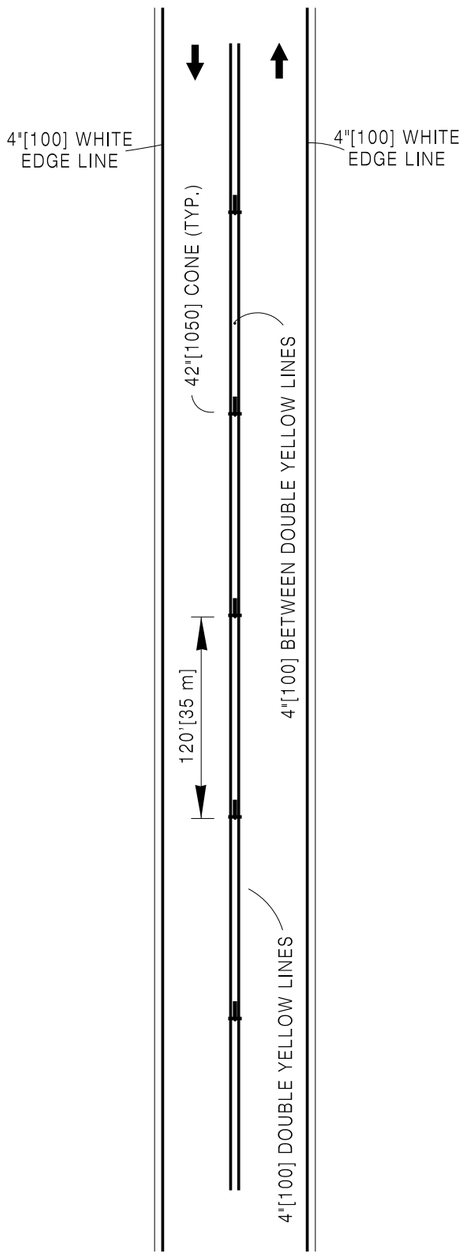

ONE LANE OF INTERSTATE
(2 LANE 2-WAY DURING CONSTRUCTION)
TEMPORARY STRIPING TAPE OR PAINT

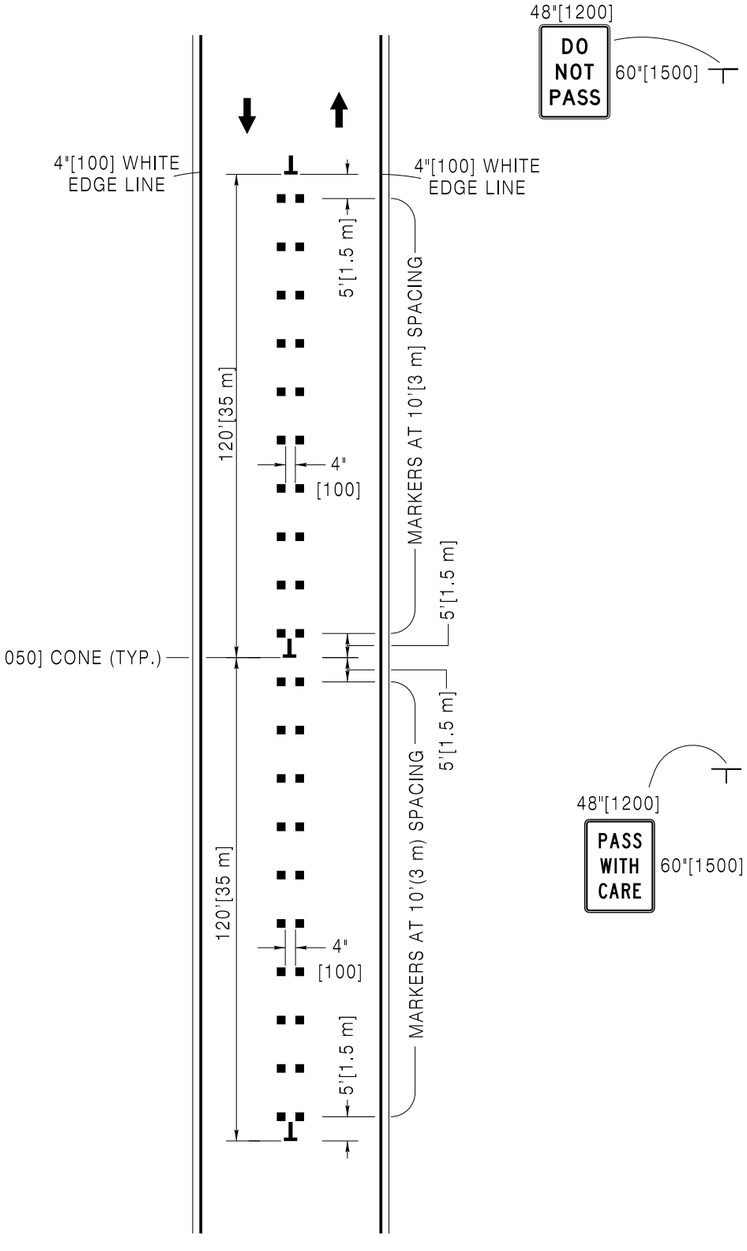

ONE LANE OF INTERSTATE
(2 LANE 2-WAY DURING CONSTRUCTION)
RAISED PAVEMENT MARKERS
DOUBLE SIDE (YELLOW)

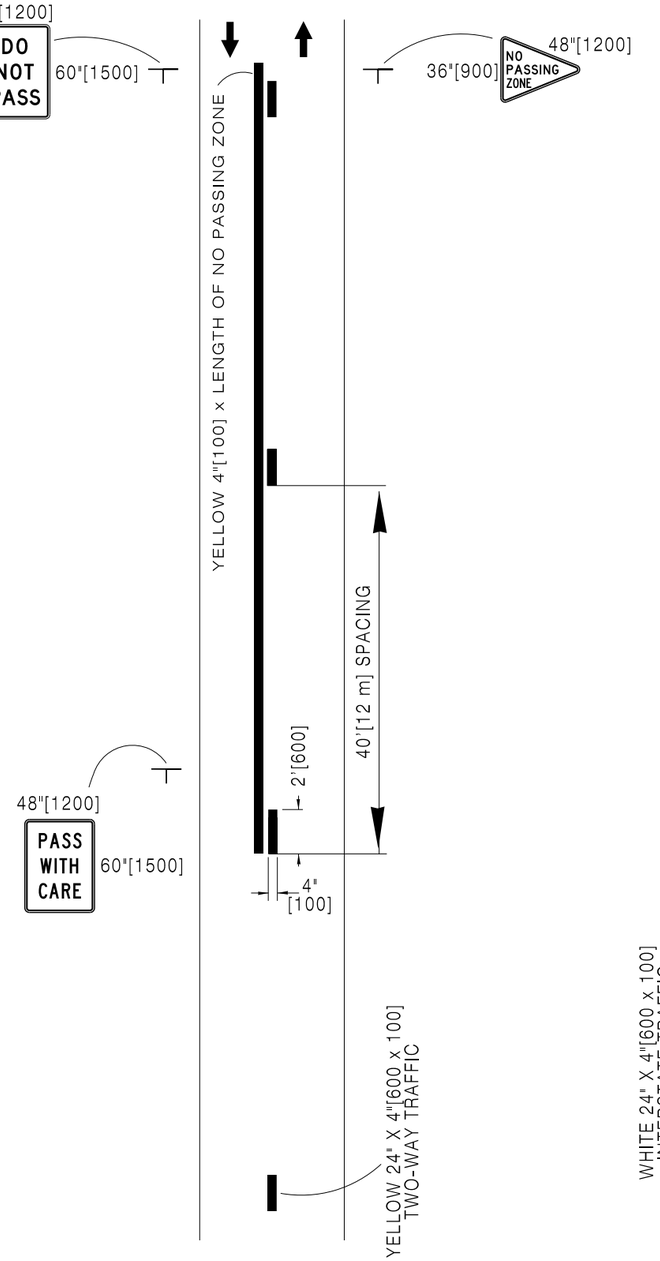

2 LANE 2-WAY ROADWAY
USING TEMPORARY STRIPING TAPE OR
PAINT CENTERLINE AND SOLID LINES
INCLUDING NO-PASSING ZONE

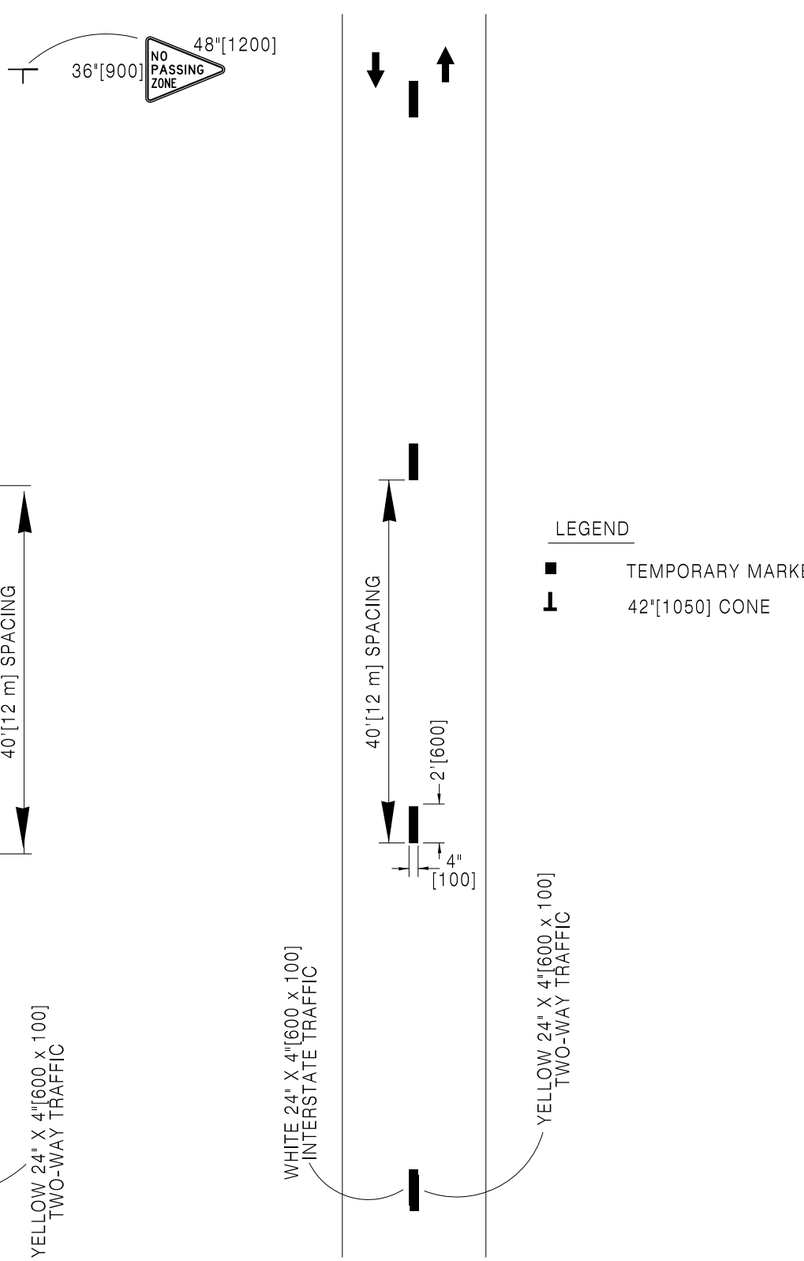

2 LANE 2-WAY ROADWAY
(CENTER LINE) OR INTERSTATE
(LANE LINE) USING TEMPORARY
STRIPING TAPE OR PAINT

LEGEND

- TEMPORARY MARKERS
- 42"[1050] CONE

Designed by: TRAFFIC	
Drawn by: JTG	
Checked by: TRAFFIC	
Previous Dwg. No. 703-1E	

INTERMEDIATE LIFT
TEMPORARY PAVEMENT MARKERS

Note: Units shown in brackets [ ] are metric and are in millimeters (mm) unless other units are shown.

WYOMING DEPARTMENT OF TRANSPORTATION

CONSTRUCTION TRAFFIC CONTROL DEVICES

STANDARD PLAN

STANDARD PLAN NUMBER
703-1F
SHEET 12 of 12
Issued by: TRAFFIC PROGRAM
Date Issued: OCTOBER, 2014