SOUTH PARK LOOP
PATHWAY CONNECTOR PROJECT
Teton County, Wyoming

DRAWING INDEX

Sheet Number	Sheet Title
1.0	TITLE SHEET
OVERVIEWS	
1.1	OVERVIEW
1.2	OVERVIEW
1.3	OVERVIEW
1.4	HORIZONTAL ALIGNMENT DATA
DETAILS	
2.0	TYPICAL SECTIONS
2.1	DETAILS
2.2	DETAILS
2.3	DETAILS
PLAN & PROFILES	
3.0	STA. 0+00.00 - 5+00.00
3.1	STA. 5+00.00 - 10+60.00
3.2	STA. 10+60.00 - 16+20.00
3.3	STA. 16+20.00 - 21+80.00
3.4	STA. 21+80.00 - 27+40.00
3.5	STA. 27+40.00 - 33+00.00
3.6	STA. 33+00.00 - 38+00.00
3.7	STA. 38+00.00 - 43+60.00
3.8	STA. 43+60.00 - 49+20.00
3.9	STA. 49+20.00 - 54+80.00
3.10	STA. 54+80.00 - 60+40.00
3.11	STA. 60+40.00 - 66+00.00
3.12	STA. 66+00.00 - 71+60.00
3.13	STA. 71+60.00 - 76+60.00
3.14	STA. 76+60.00 - 82+20.00
3.15	STA. 82+20.00 - 87+80.00
3.16	STA. 87+80.00 - 93+40.00
3.17	STA. 93+40.00 - 99+00.00
3.18	STA. 99+00.00 - 104+60.00
RETAINING WALLS	
4.0	RETAINING WALL A
4.1	RETAINING WALL A
4.2	RETAINING WALL B
4.3	RETAINING WALL B
4.4	RETAINING WALL B
4.5	RETAINING WALL C
4.6	RETAINING WALL C
4.7	KEYSTONE RETAINING WALL DETAILS
4.8	CONCRETE SEGMENTED RETAINING WALL 1
4.9	CONCRETE SEGMENTED RETAINING WALL (CONTINUED)
4.10	CONCRETE SEGMENTED RETAINING WALL (CONTINUED)
PLAN DETAIL SHEETS	
5.0	SOUTH PARK CEMETARY ROAD CROSSING
5.1	GRAND TETON CIRCLE DRIVE NORTH CROSSING
5.2	GRAND TETON CIRCLE DRIVE SOUTH CROSSING
5.3	SOUTH PARK RANCH ROAD CROSSING
5.4	SOUTH PARK RANCH ROAD DETAILS
5.5	WILSON ROAD CROSSING
5.6	SOUTHERN SPLR AT GRADE CROSSING
5.7	MELODY CROSSING
TREE MITIGATION PLANS	
6.0	TREE MITIGATION
6.1	TREE MITIGATION
6.2	TREE DETAILS
ADDITIVE ALTERNATE PATHWAY	
7.0	MELODY EAST CONNECTION
CROSS SECTIONS	
X1 - X21	SECTIONS
WYDOT STANDARD PLANS	
1-6	703-2E CONSTRUCTION TRAFFIC CONTROL
1-12	703-1F CONSTRUCTION TRAFFIC CONTROL

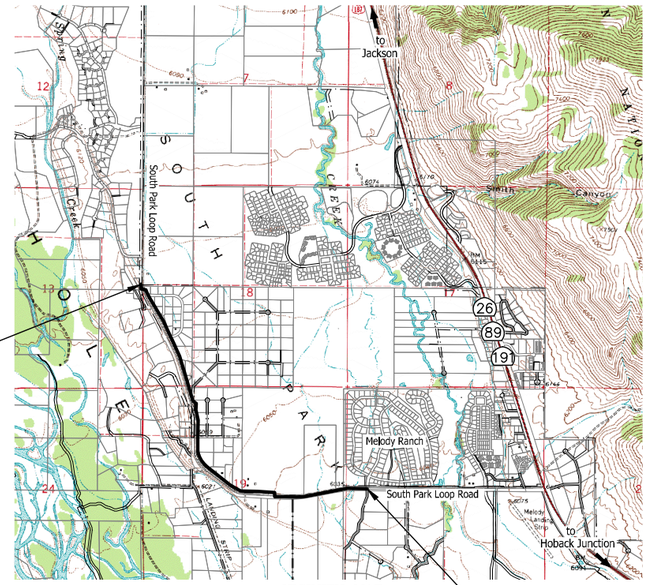

VICINITY MAP
SCALE: N.T.S.

LEGENDS

EXISTING

- PROPERTY LINE
- EASEMENT LINE
- EDGE OF ASPHALT
- CENTERLINE OF ROAD
- EDGE OF GRAVEL
- 6154 EXISTING CONTOUR
- OP OVERHEAD POWER
- X-X BUCK RAIL FENCE
- WOOD RAIL FENCE
- WIRE FENCE
- OLD BROKEN FENCE
- GAS LINE
- OP OVERHEAD POWER LINE
- EDGE OF WATER
- FLOW LINE DITCH
- TREE LINE
- WETLANDS
- T TELEPHONE PEDESTAL
- POWER TRANSFORMER
- TV CABLE TV PEDESTAL
- GD GAS DELINEATOR
- P POWER VAULT
- I IRRIGATION RISER
- MB MAIL BOX
- FO FIBER OPTIC BOX
- T TELEPHONE VAULT
- SEWER CLEANOUT
- CULVERT
- SIGN
- GUY WIRE
- LP LIGHT POLE
- UTILITY POLE
- PP POWER POLE
- METAL ART WORK
- COTTONWOOD TREE
- WILLOW BUSH
- DECIDUOUS TREE
- SPRUCE TREE
- PINE TREE
- BRASS CAP
- PROPERTY CORNER REBAR WITH CAP
- T-STAKE
- CONTROL POINT

PROPOSED

- 6154 DESIGN CONTOURS
- 1+00 2+00 CENTERLINE OF PATHWAY
- STRIPPING/PATHWAY LIMITS
- SF SILT FENCE
- LIMIT OF DISTURBANCE
- IR IRRIGATION LINE
- PEDESTRIAN RAIL
- SEDIMENT LOG
- CULVERT
- NEW COTTONWOOD
- WILLOW TRANSPLANT
- ASPEN TREE
- MOUNTAIN MAPLE

SET No. _____

DATE	5/13/2016
SURVEYED	NE
ENGINEERED	DD
DRAWN	DB
CHECKED	DD
APPROVED	DD

REV.

NELSON ENGINEERING
P.O. BOX 1599, JACKSON WYOMING (307) 733-2087

DRAWING TITLE
TITLE SHEET

JOB TITLE
SOUTH PARK LOOP
CONNECTOR PATHWAY PROJECT
TETON COUNTY, WY

DRAWING NO 1.0

JOB NO 15-257-02

S:\Proj\2015\257-02 (Design - South Park Loop Pathway Connector\1\Drawings\Layout Drawings\C1Title.dwg c1D - May 16, 2016 12:28:22 pm PLOTTED BY: kerichmer DWG FORMAT: 19.1

S:\Proj2015\257-02 (Design - South Park Loop Pathway Connector)\Drawings\Layout Drawings\Overviewdwg (11 OVERVIEW) - May 15 2016 02:07:14 pm PLOTTED BY: karichner DWG FORMAT: 191

DRAWING NO 1.1	JOB TITLE SOUTH PARK LOOP CONNECTOR PATHWAY PROJECT TETON COUNTY, WY	DRAWING TITLE OVERVIEW STA. 0+00 – 30+00	NELSON ENGINEERING P.O. BOX 1599, JACKSON WYOMING (307) 733-2087	DATE 5/13/2016	REV.
JOB NO 15-257-02				SURVEYED NE	
				ENGINEERED DD	
				DRAWN DB	
				CHECKED DD	
				APPROVED DD	

DRAWING NO 1.2	JOB TITLE SOUTH PARK LOOP CONNECTOR PATHWAY PROJECT TETON COUNTY, WY	DRAWING TITLE OVERVIEW STA. 30+00 – 39+00	NELSON ENGINEERING P.O. BOX 1599, JACKSON WYOMING (307) 733-2087	DATE 5/13/2016	REV.
JOB NO 15-257-02				SURVEYED NE	
				ENGINEERED DD	
				DRAWN DB	
				CHECKED DD	
				APPROVED DD	

S:\Proj2015\257-02 (Design - South Park Loop Pathway Connector)\Drawings\Layout Drawings\Overview.dwg (1.3 AERIAL PLANNING EXHIBIT) - May 15 2016 02:07:59 pm PLOTTED BY: karichner DWG FORMAT: 19.1

DRAWING NO: 1.3	JOB TITLE: SOUTH PARK LOOP CONNECTOR PATHWAY PROJECT TETON COUNTY, WY	DRAWING TITLE: OVERVIEW STA. 80+00 – 105+00	NELSON ENGINEERING P.O. BOX 1599, JACKSON WYOMING (307) 733-2087	DATE: 5/13/2016	REV.
JOB NO: 15-257-02				SURVEYED: NE	
				ENGINEERED: DD	
				DRAWN: DB	
				CHECKED: DD	
				APPROVED: DD	

LINE TABLE: ALIGNMENTS		
LINE #	BEARING	LENGTH
L1	S35°34'45"E	32.21
L2	S09°10'22"E	57.11
L3	S12°12'48"E	30.31
L4	S11°43'45"W	8.12
L5	N76°54'43"E	31.31
L6	S17°02'26"E	73.56
L7	S18°53'39"E	36.75
L8	S28°59'09"E	635.25
L9	S26°41'09"E	157.03
L10	S19°23'48"E	26.08
L11	S26°49'24"E	76.52
L12	S26°41'09"E	231.44
L13	S26°21'49"E	232.26
L14	S16°20'12"E	458.68
L15	S16°16'24"E	492.47
L16	S49°40'53"E	41.46
L17	S49°44'50"E	14.25
L18	S25°34'49"W	11.26
L19	S03°26'40"E	36.98
L20	S10°27'57"E	70.20

LINE TABLE: ALIGNMENTS		
LINE #	BEARING	LENGTH
L21	S07°10'35"E	11.33
L22	S00°36'01"E	330.15
L23	S29°17'51"E	5.63
L24	S00°42'29"E	39.77
L25	S24°41'05"W	8.35
L26	S00°37'47"E	205.05
L27	S01°22'52"E	135.74
L28	S55°23'00"E	513.27
L29	S51°12'56"E	224.54
L30	S50°11'30"E	95.77
L31	S84°03'12"E	22.44
L33	S87°42'59"E	22.41
L34	S86°33'34"E	101.98
L35	N84°09'34"E	34.23
L36	S02°17'51"W	36.56
L37	N87°54'20"E	42.56
L38	S87°26'17"E	61.41
L38	S33°10'40"E	28.41
L39	S87°26'04"E	122.89
L40	N86°55'52"E	17.11

LINE TABLE: ALIGNMENTS		
LINE #	BEARING	LENGTH
L41	N80°14'37"E	66.79
L42	N78°16'35"E	383.03
L43	S29°09'29"E	44.68
L43	N79°04'28"E	194.06
L44	N82°05'15"E	45.58
L45	N86°43'48"E	59.94
L46	N87°56'44"E	91.13
L47	N89°17'11"E	143.63
L48	S89°42'16"E	198.86

LINE TABLE: ALIGNMENTS		
LINE #	BEARING	LENGTH
L49	S81°20'54"E	38.39
L50	S87°41'51"E	222.40
L51	N78°50'27"E	16.19

CURVE TABLE: ALIGNMENTS					
CURVE #	ARC LENGTH	RADIUS	CHORD BEARING	CHORD LENGTH	DELTA ANGLE
C1	9.90	30.00	S26°07'17"E	9.86	018°54'57"
C2	13.83	30.00	S22°22'34"E	13.70	026°24'23"
C3	8.36	20.00	S0°14'31"E	8.30	023°56'34"
C4	16.03	8.00	S45°40'46"E	13.48	114°49'02"
C5	12.01	8.00	S60°03'51"E	10.92	086°02'51"
C6	10.57	50.00	S23°05'57"E	10.55	012°07'03"
C7	8.96	50.00	S24°01'34"E	8.95	010°15'50"
C8	35.23	200.00	S23°56'24"E	35.18	010°05'31"
C9	261.82	6522.00	S27°50'09"E	261.80	002°18'00"
C10	5.09	40.00	S23°02'29"E	5.09	007°17'21"
C11	6.48	50.00	S23°06'36"E	6.48	007°25'36"
C12	5.55	50.00	S30°00'02"E	5.54	006°21'15"
C13	5.67	50.00	S29°55'54"E	5.66	006°29'31"
C14	455.01	2600.00	S21°21'00"E	454.43	010°01'37"
C15	43.73	75.00	S32°58'39"E	43.11	033°24'28"
C16	39.44	30.00	S12°05'01"E	36.66	075°19'39"
C17	50.66	100.00	S11°04'04"W	50.12	029°01'29"
C18	24.51	200.00	S6°57'19"E	24.49	007°01'17"
C19	11.48	200.00	S8°49'16"E	11.48	003°17'22"
C20	137.73	1200.00	S3°53'18"E	137.65	006°34'34"
C21	15.03	30.00	S14°56'56"E	14.87	028°41'50"
C22	14.97	30.00	S15°00'10"E	14.81	028°35'22"
C23	13.30	30.00	S11°59'18"W	13.19	025°23'33"
C24	17.67	40.00	S12°01'39"W	17.53	025°18'52"
C25	518.38	550.00	S28°22'56"E	499.41	054°00'08"
C26	428.47	725.00	S67°07'21"E	422.26	033°51'42"
C27	23.61	500.00	S82°42'03"E	23.60	002°42'18"
C28	201.91	10000.00	S87°08'16"E	201.91	001°09'25"
C29	32.40	200.00	N88°48'00"E	32.36	009°16'52"
C30	17.13	10.00	S46°46'18"E	15.11	098°08'17"
C31	16.47	10.00	S44°53'54"E	14.67	094°23'31"
C32	16.25	200.00	S89°45'58"E	16.25	004°39'23"
C33	316.85	3222.00	N89°44'54"E	316.73	005°38'04"
C34	291.80	2500.00	N83°35'14"E	291.63	006°41'15"
C35	103.75	3022.00	N79°15'36"E	103.75	001°58'01"
C36	198.69	3778.00	N80°34'51"E	198.66	003°00'48"
C37	119.75	1478.00	N84°24'31"E	119.72	004°38'33"
C38	17.61	1000.00	N89°47'27"E	17.61	001°00'33"

CURVE TABLE: ALIGNMENTS					
CURVE #	ARC LENGTH	RADIUS	CHORD BEARING	CHORD LENGTH	DELTA ANGLE
C39	22.16	200.00	S84°31'22"E	22.15	006°20'57"
C40	23.49	100.00	N85°34'18"E	23.44	013°27'42"
C41	23.46	100.00	N85°33'44"E	23.41	013°26'34"

CURVE TABLE: ALIGNMENTS					
CURVE #	ARC LENGTH	RADIUS	CHORD BEARING	CHORD LENGTH	DELTA ANGLE
C42	32.87	75.00	N11°49'36"E	32.60	025°06'30"
C43	31.15	100.00	N15°27'30"E	31.02	017°50'42"

LINE TABLE: ALIGNMENTS		
LINE #	BEARING	LENGTH
L52	N00°43'39"W	50.90
L53	N24°22'51"E	13.36
L54	N06°32'09"E	121.03

		REV.
DATE	5/13/2016	
SURVEYED	NE	
ENGINEERED	DD	
DRAWN	DB	
CHECKED	DD	
APPROVED	DD	

NELSON ENGINEERING
P.O. BOX 1599, JACKSON WYOMING (307) 733-2087

DRAWING TITLE
HORIZONTAL ALIGNMENT DATA

JOB TITLE
SOUTH PARK LOOP
CONNECTOR PATHWAY PROJECT
TETON COUNTY, WY

DRAWING NO
1.4

JOB NO
15-257-02

S:\Proj\2015\257-02 (Design - South Park Loop Pathway Connector)\Drawings\SPLR PATH DESIGN.dwg [LINE & CURVE TABLES] - May 15 2016 02:27 pm PLOTTED BY: karichner DWG FORMAT: 191

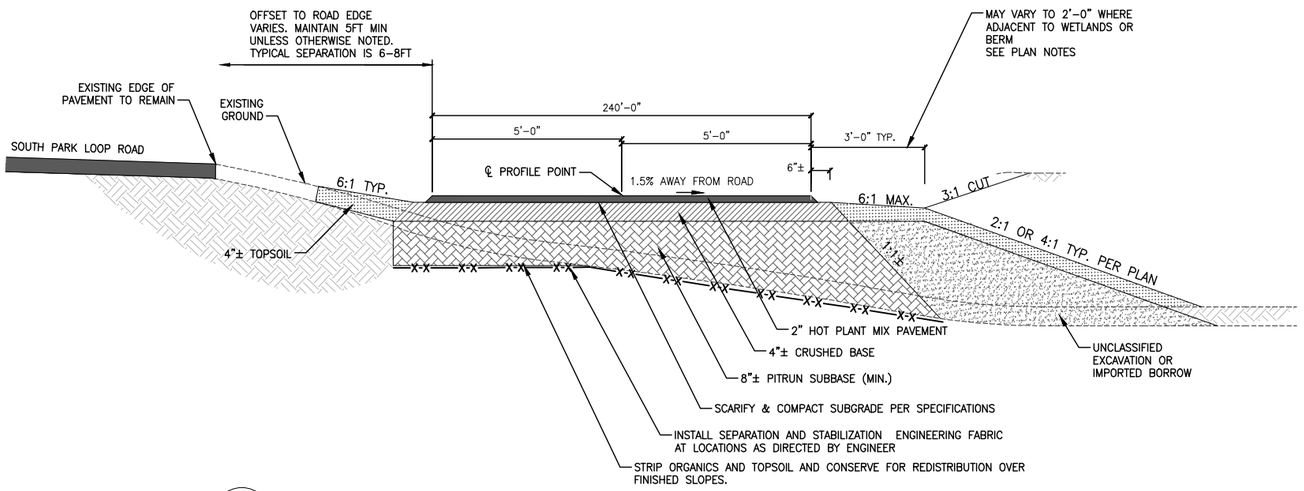

1 / 2.0 TYPICAL SECTION: CROSS SLOPE LEFT/RIGHT CUT/FILL CONDITION

1/2" = 1'-0"

NOTE:
REFER TO 6.2 FOR REQUIREMENTS FOR ROOT BARRIERS WITHIN THE EMBANKMENTS

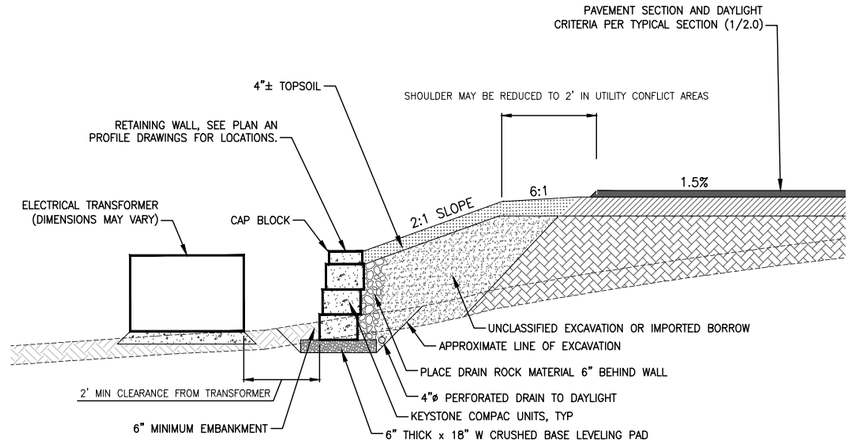

NOTE:
RETAINING WALL SHOWN APPLICABLE TO WALLS
STA. 21+80± TO STA. 23+80±
SEE 4.# DRAWINGS FOR RETAINING WALLS A, B, AND C

4 / 2.0 TYPICAL SECTION: SEGMENTED MASONRY UNIT RETAINING WALL DETAIL

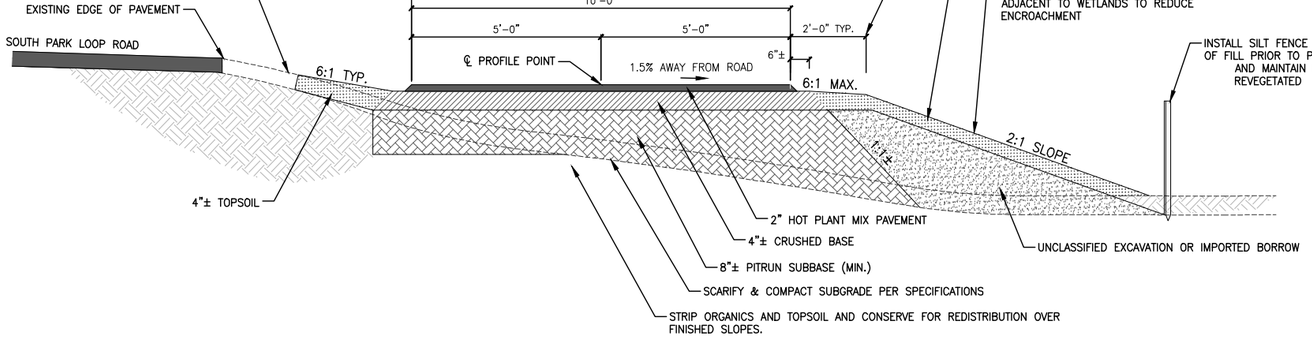

2 / 2.0 PATHWAY SECTION: ADJACENT TO WETLAND

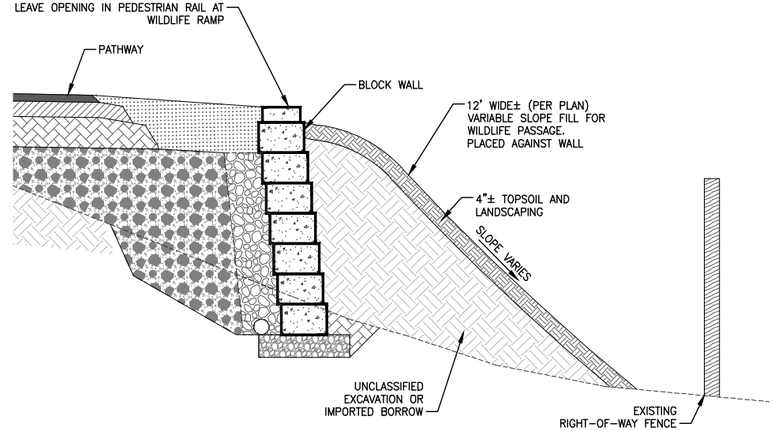

5 / 2.0 TYPICAL SECTION: SHORT WALL DAYLIGHT

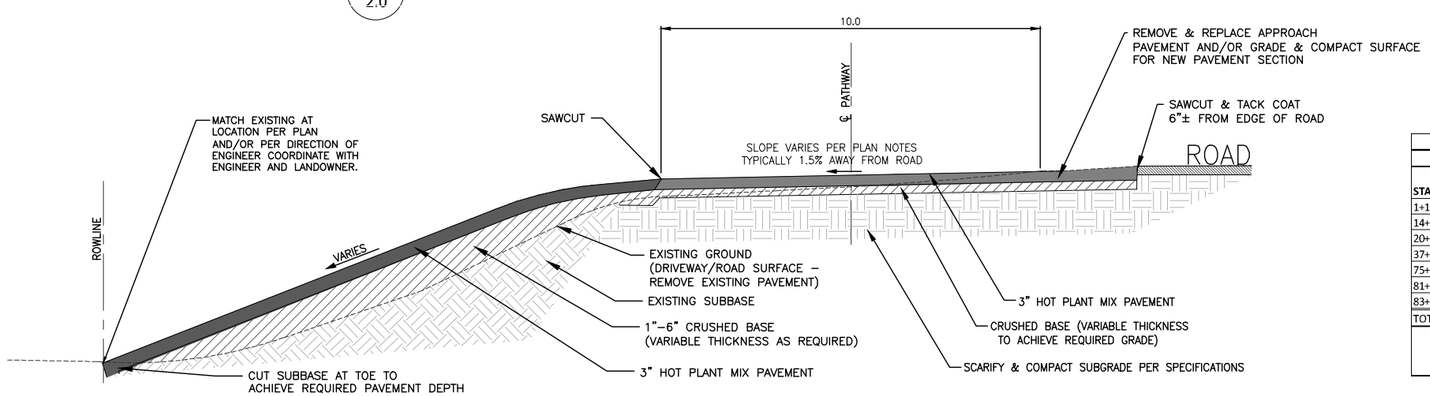

3 / 2.0 PATHWAY SECTION: APPROACH PAVING DETAIL

	CYDS							
	UNCLASSIFIED EXCAVATION		EMBANKMENT					
STATION RANGE	TOPSOIL STRIP	CUT MATERIAL	FILL MATERIAL	PITRUN SUBBASE	IMPORTED BORROW	PLACED TOPSOIL	TOPSOIL CY	REMARKS
1+15 - 14+40	417	134	496	600	193	2235	248	Project Start to Wall A
14+40 - 20+20	152	33	698	145	698	610	68	Retaining Walls (Structural Fill)
20+20 - 36+80	942	115	586	784	-159	2807	312	Wall B to South Park Ranch Rd
37+20 - 74+80	1128	178	1310	1897	140	1225	136	South Park Ranch Rd to South X-ing
75+20 - 81+20	162	36	163	278	48	749	83	South X-ing to Wall C
81+20 - 83+00	50	10	148	45	148	267	30	Retaining Walls (Structural Fill)
83+00 - 100+15	521	120	622	788	280	2688	299	Wall C to S Cortland Drive
TOTALS	3372	625	4023	4537	503	10580	1176	
PAY ITEM QTY:	3900 CYD					930 TONS	10580 SY	

6 / 2.0 EARTHWORK QUANITIES

REV.	DATE	
	5/13/2016	
	SURVEYED	NE
	ENGINEERED	DD
	DRAWN	DB
	CHECKED	DD
	APPROVED	DD

NELSON ENGINEERING
P.O. BOX 1599, JACKSON WYOMING (307) 733-2087

DRAWING TITLE: TYPICAL SECTIONS

JOB TITLE: SOUTH PARK LOOP CONNECTOR PATHWAY PROJECT TETON COUNTY, WY

DRAWING NO: 2.0

JOB NO: 15-257-02

S:\Proj\2015\257-02 (Design - South Park Loop Pathway Connector)\Drawings\DETAILS & SECTIONS.dwg (TYPICAL SECTIONS) - May 13 2016 01:20:55 pm PLOTTED BY: karlchner

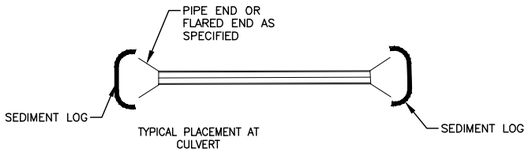

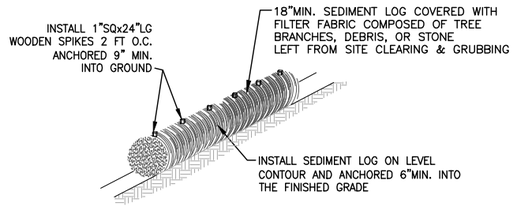

BRUSH BARRIER SHALL BE A CONTINUOUS RUN WITH NO GAPS

NOTE:
DO NOT INSTALL SEDIMENT LOGS IN IRRIGATIONS DITCHES

1 / 2.1 SEDIMENT LOG DETAIL

N.T.S.

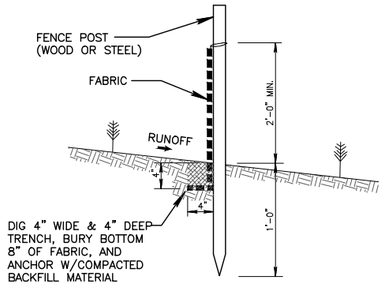

4 / 2.1 SILT FENCE SECTION DETAIL

N.T.S.

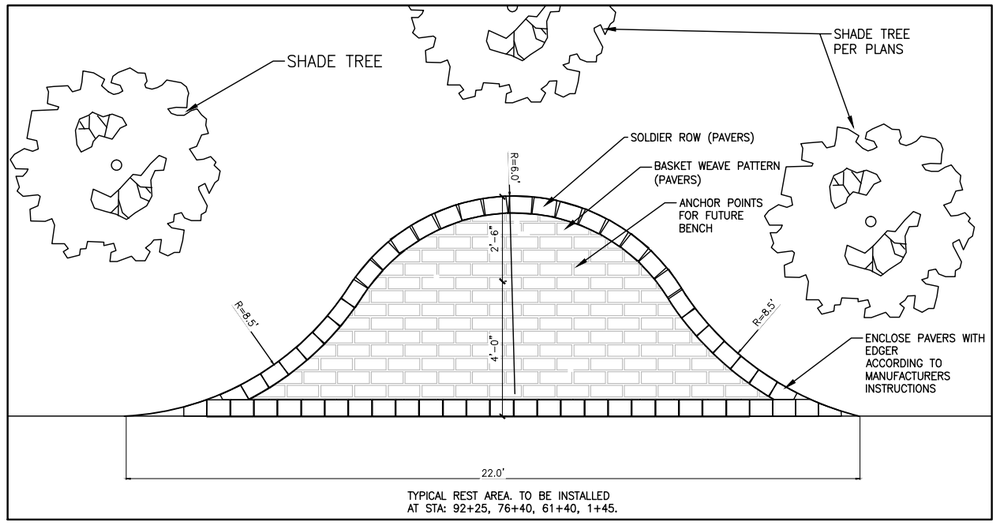

TYPICAL REST AREA. TO BE INSTALLED
AT STA: 92+25, 76+40, 61+40, 1+45.

6 / 2.1 TYPICAL PATHWAY REST AREA INSTALLATION: PLAN VIEW

N.T.S.

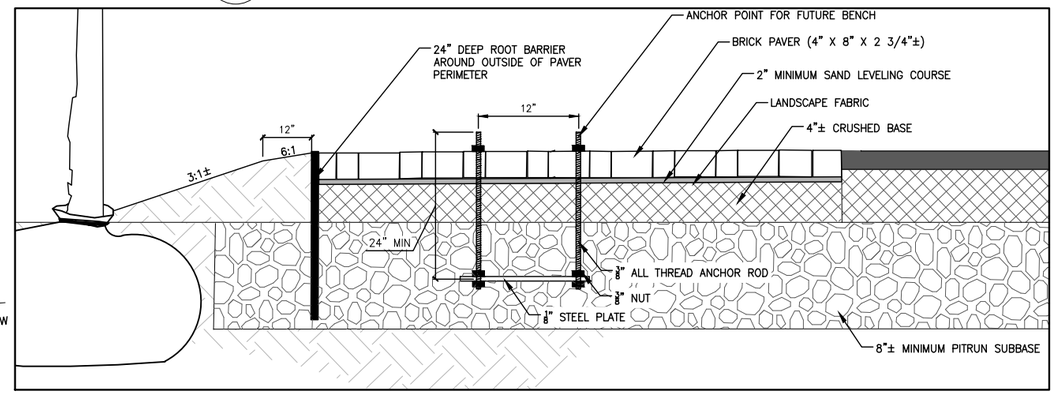

7 / 2.1 TYPICAL PATHWAY REST AREA INSTALLATION: SECTION VIEW

N.T.S.

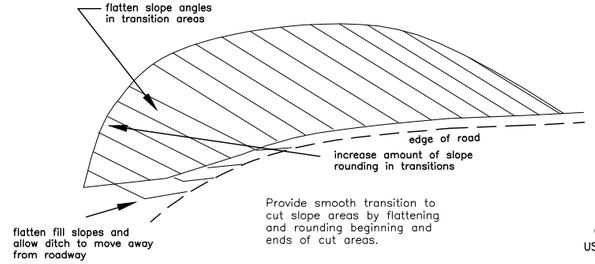

Provide smooth transition to cut slope areas by flattening and rounding beginning and ends of cut areas.

2 / 2.1 SLOPE TRANSITION DETAIL

N.T.S.

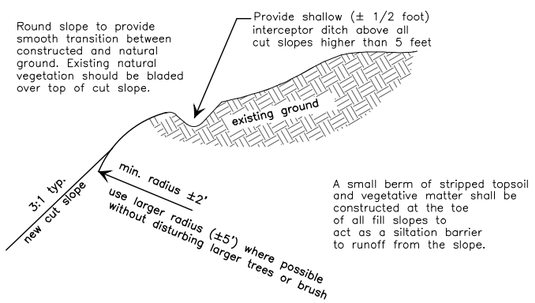

A small berm of stripped topsoil and vegetative matter shall be constructed at the toe of all fill slopes to act as a siltation barrier to runoff from the slope.

3 / 2.1 SLOPE ROUNDING DETAIL

N.T.S.

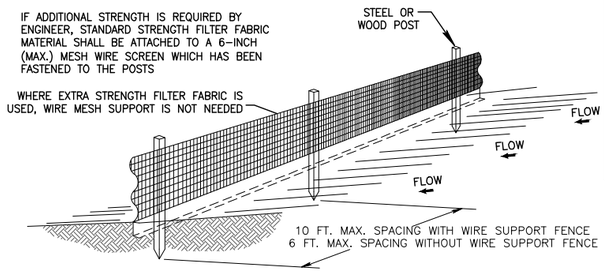

NOTES:

1. THE HEIGHT OF A SILT FENCE SHALL NOT EXCEED 36 INCHES (90 CM).
2. THE FILTER FABRIC SHALL BE PURCHASED IN A CONTINUOUS ROLL CUT TO THE LENGTH OF THE BARRIER TO AVOID THE USE OF JOINTS.
3. POSTS SHALL BE SPACED A MAXIMUM OF 10 FEET (3 M) APART AT THE BARRIER LOCATION AND DRIVEN SECURELY INTO THE GROUND A MINIMUM OF 12 INCHES (30 CM). WHEN EXTRA STRENGTH FABRIC IS USED WITHOUT THE WIRE SUPPORT FENCE, POST SPACING SHALL NOT EXCEED 6 FEET (1.8 M).
4. A TRENCH SHALL BE EXCAVATED APPROXIMATELY 4 INCHES (10 CM) WIDE AND 4 INCHES (10 CM) DEEP ALONG THE LINE OF POSTS AND UPSLOPE FROM THE BARRIER.
5. WHEN STANDARD STRENGTH FILTER FABRIC IS USED, A WIRE MESH SUPPORT FENCE SHALL BE FASTENED SECURELY TO THE UPSLOPE SIDE OF THE POSTS USING HEAVY DUTY WIRE STAPLES AT LEAST 1 INCH (25 MM) LONG, TIE WIRES, OR HOG RINGS. THE WIRE SHALL EXTEND INTO THE TRENCH A MINIMUM OF 2 INCHES (5 CM) AND SHALL NOT EXTEND MORE THAN 36 INCHES (90 CM) ABOVE THE ORIGINAL GROUND SURFACE.
6. THE STANDARD STRENGTH FILTER FABRIC SHALL BE STAPLED OR WIRED TO THE FENCE, AND 8 INCHES (20 CM) OF THE FABRIC SHALL BE EXTENDED INTO THE TRENCH. THE FABRIC SHALL NOT EXTEND MORE THAN 36 INCHES (90 CM) ABOVE THE ORIGIONAL GROUND SURFACE.
7. THE TRENCH SHALL BE BACKFILLED AND THE SOIL COMPACTED OVER THE FILTER FABRIC.
8. FABRIC AND INSTALLATION TECHNIQUES TO BE APPROVED BY ENGINEER.

5 / 2.1 SILT FENCE INSTALLATION DETAIL

N.T.S.

DATE	5/13/2016		REV.
SURVEYED	NE		
ENGINEERED	DD		
DRAWN	DB		
CHECKED	DD		
APPROVED	DD		

NELSON ENGINEERING
P.O. BOX 1599, JACKSON WYOMING (307) 733-2087

DRAWING TITLE
DETAILS

JOB TITLE
SOUTH PARK LOOP
CONNECTOR PATHWAY PROJECT
TETON COUNTY, WY

DRAWING NO 2.1

JOB NO 15-257-02

S:\Proj\2015\257-02 (Design - South Park Loop Pathway Connector)\Drawings\DETAILS & SECTIONS.dwg (21 DETAILS) - May 16, 2016 12:00:20 pm PLOTTED BY: kcarlsmar

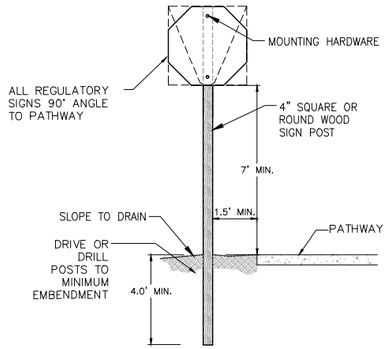

NOTES:
1. LATERAL OFFSET FROM ROADWAY TO SIGN IS 12 FEET MIN. FROM EDGE OF TRAVEL WAY
2. STOP/YIELD SIGNS TO BE SETBACK 4 FEET FROM EDGE OF CROSSWALK/PATHWAY

1 / 2.3 SIGN DETAIL
N.T.S.

STATION	SIDE	SIGN	OFFSET FROM EOP	REMARKS	RELATIVE LOCATION/FEATURE
1+70	RT	WAYFINDER SIGN	2	REMOVE EXISTING SIGN & RESET	SP CEMETERY ROAD
2+80±	RT	STOP & NO MOTOR VEHICLES	1.5	OPPOSE SIGNS ON SAME POST	NORTHERN CROSSING SP LOOP RD
3+30±	LT	STOP & NO MOTOR VEHICLES	1.5	OPPOSE SIGNS ON SAME POST	NORTHERN CROSSING SP LOOP RD
4+40±	RT	"LOOK"	1.5	FACING WEST	CROSSING N GRAND TETON CIRCLE
4+60±	LT	"LOOK"	1.5	FACING EAST	CROSSING N GRAND TETON CIRCLE
6+40±	RT	NARROW SHOULDER	1	FACING NORTH	
6+80±	LT	NARROW SHOULDER	1	FACING SOUTH	
23+00±	RT	NARROW SHOULDER	1	FACING NORTH	
23+70±	LT	NARROW SHOULDER	1	FACING SOUTH	
36+50±	RT	"LOOK"	1.5	FACING NORTH	SP RANCH RD CROSSING
37+10±	LT	"LOOK"	1.5	FACING SOUTH	SP RANCH RD CROSSING
44+60±	RT	"LOOK"	1.5	FACING NORTH	WILSON RD CROSSING
45+10±	LT	"LOOK"	1.5	FACING SOUTH	WILSON RD CROSSING
74+75±	RT	STOP & NO MOTOR VEHICLES	1.5	OPPOSE SIGNS ON SAME POST	SOUTHERN CROSSING SP LOOP RD
75+20±	LT	STOP & NO MOTOR VEHICLES	1.5	OPPOSE SIGNS ON SAME POST	SOUTHERN CROSSING SP LOOP RD
85+90±	RT	NARROW SHOULDER	1	FACING NORTH	
87+10±	LT	NARROW SHOULDER	1	FACING SOUTH	
93+80±	RT	NARROW SHOULDER	1	FACING NORTH	
94+20±	LT	NARROW SHOULDER	1	FACING SOUTH	
95+80±	RT	NARROW SHOULDER	1	FACING NORTH	
97+90±	LT	NARROW SHOULDER	1	FACING SOUTH	
100+00±	RT	"LOOK"	1.5	FACING NORTH	CROSSING CORTLAND DRIVE
100+75±	LT	"LOOK"	1.5	FACING SOUTH	CROSSING CORTLAND DRIVE
105+50±	RT	STOP (R1-1)	1.5	SET AT EOP FACING NORTH ON OTHER SIDE OF SP LOOP RD (SEE SHEET 5.7)	CROSSING: MELODY RANCH SPUR
105+60±	LT	STOP (R1-1)	1.5	SET AT EOP FACING SOUTH (SEE SHEET 5.7)	CROSSING: MELODY RANCH SPUR

2 / 2.3 PATHWAY SIGN SCHEDULE

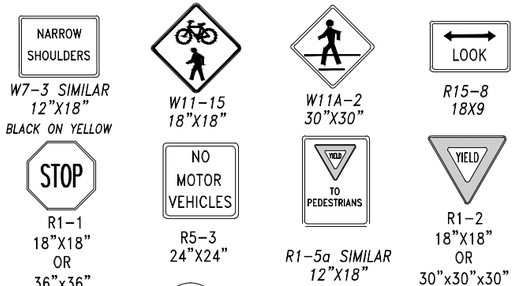

3 / 2.3 SIGNS
N.T.S.

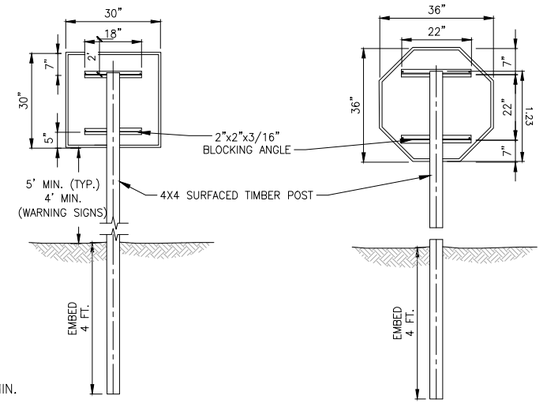

4 / 2.3 ROADWAY SIGN DETAILS
N.T.S.

STA	Description	SIGN	REMARKS
2+20±	large sign adjacent	SOUTH PARK CEMETERY	Ensure Toe of Pathway fill does not encroach
2+50±	SET NEW SIGN	STOP (R1-1)	SET FACING "UP" SP CEMETERY ROAD
3+00±	SET NEW SIGNS	"BIKES ENTERING HIGHWAY 100 FT" "CAUTION AHEAD"	SET 100' NORTH OF EOP, FACING NORTH
3+00±	SET NEW SIGNS	"PEDESTRIANS & BICYCLES GRAPHIC" & RRFB	SET 5' NORTH OF EOP, FACING NORTH
3+20±	SET NEW SIGNS	"BIKES ENTERING HIGHWAY 100 FT" "CAUTION AHEAD"	SET 100' SOUTH OF EOP, FACING SOUTH
3+20±	SET NEW SIGNS	"PEDESTRIANS & BICYCLES GRAPHIC" & RRFB	SET 5' SOUTH OF EOP, FACING SOUTH
4+28±	sign post within grading extents	STREET NAME & STOP SIGN	REMOVE & RESET STREET SIGN. RELOCATE STOP SIGN TO OPPOSITE SIDE OF DITCH WITH "SP-2" SIGN ON NEW POST (SEE SHEET 5.1)
4+28±	SET NEW SIGN	SP-2	SEE SHEET 5.1
7+11±	sign post in middle of path	BIKES ENTERING HIGHWAY 500 FT	REMOVE
12+09±	sign post in middle of path	BIKES ENTERING HIGHWAY 1000 FT	REMOVE
16+50±	sign post in middle of path	STREET NAME & STOP SIGN	REMOVE & RESET STREET SIGN. RELOCATE STOP SIGN TO OPPOSITE SIDE OF DITCH WITH "SP-2" SIGN ON NEW POST (SEE SHEET 5.2)
16+60±	SET NEW SIGN	SP-2	SEE SHEET 5.2
21+40±	sign post in middle of path	ADDRESS MARKER (BY OWNER)	REMOVE & RESET
36+80±	SET NEW SIGNS	"BIKES ENTERING HIGHWAY 100 FT" "CAUTION AHEAD"	SET 100' NORTH OF EOP, FACING NORTH
36+80	SET NEW SIGN	W11-15	SET 5' FROM EOP, FACING NORTH (SEE SHEET 5.3)
36+80±	SET NEW SIGNS	W11-15 & RRFB	SET 5' NORTH OF EOP, FACING NORTH
37+20±	SET NEW SIGNS	"BIKES ENTERING HIGHWAY 100 FT" "CAUTION AHEAD"	SET 100' SOUTH OF EOP, FACING SOUTH
37+20±	SET NEW SIGN	W11-15	SET 5' SOUTH OF EOP, FACING SOUTH (SEE SHEET 5.3)
37+20±	SET NEW SIGNS	W11-15 & RRFB	SET 5' SOUTH OF EOP, FACING SOUTH
38+10±	sign post within grading extents	SOUTH PARK RANCH ROAD STREET SIGN	REMOVE & RESET
44+58±	sign post in middle of path	WILSON ROAD STREET SIGN	REMOVE & RESET
44+60±	sign post within grading extents	STOP (R1-1)	REMOVE & RESET
44+80±	SET NEW SIGN	W11-15	SET 5' EAST OF EOP, FACING EAST (SEE SHEET 5.4)
45+10±	SET NEW SIGN	W11-15	SET 5' WEST OF EOP, FACING SOUTHWEST (SEE SHEET 5.4)
74+80±	SET NEW SIGNS	"BIKES ENTERING HIGHWAY 100 FT" "CAUTION AHEAD"	SET 100' EAST OF EOP, FACING EAST
74+80±	SET NEW SIGNS	W11-15 & RRFB	SET 5' EAST OF EOP, FACING EAST
75+00±	SET NEW SIGNS	"BIKES ENTERING HIGHWAY 100 FT" "CAUTION AHEAD"	SET 100' WEST OF EOP, FACING WEST
75+00±	SET NEW SIGNS	W11-15 & RRFB	SET 5' WEST OF EOP, FACING WEST
98+98±	sign post in middle of path	MUNGER VIEW PARK SIGN	REMOVE & RESET
100+00±	sign post in middle of path	CORTLAND DRIVE STREET NAME SIGN	REMOVE & RESET
105+50±	set new signal	RRFB	SET AT EOP ON OTHER SIDE OF SP LOOP RD (SEE SHEET 5.7)
105+50±	SET NEW SIGN	STOP (R1-1)	SET AT EOP FACING NORTH ON OTHER SIDE OF SP LOOP RD (SEE SHEET 5.7)
105+60±	set new signal	RRFB	SET AT EOP (SEE SHEET 5.7)
105+60±	set new signal	STOP (R1-1)	SET AT EOP FACING SOUTH (SEE SHEET 5.7)

5 / 2.3 ROAD SIGN SCHEDULE

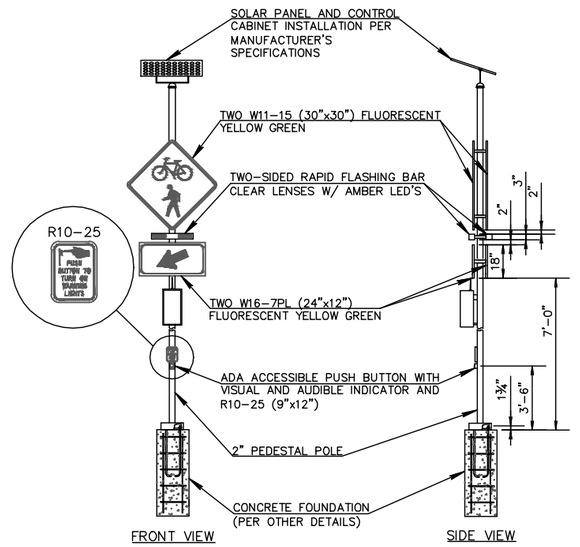

6 / 2.3 RECTANGULAR RAPID FLASHING BEACON DETAIL (RRFB)
N.T.S.

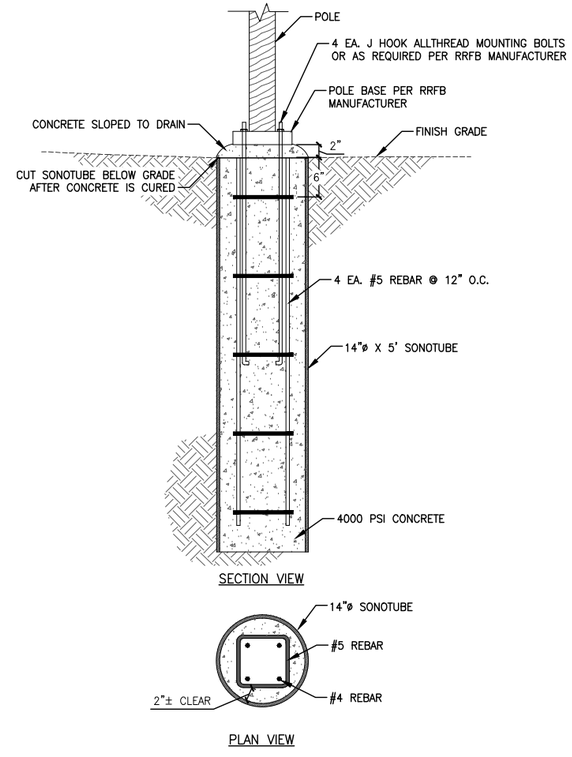

7 / 2.3 RRFB CONCRETE FOUNDATION DETAIL

REV.	DATE	5/13/2016
	SURVEYED	NE
	ENGINEERED	DD
	DRAWN	DB
	CHECKED	DD
	APPROVED	DD

NELSON ENGINEERING
P.O. BOX 1599, JACKSON WYOMING (307) 733-2087

DRAWING TITLE: SIGNAGE DETAILS & SCHEDULE

JOB TITLE: SOUTH PARK LOOP CONNECTOR PATHWAY PROJECT TETON COUNTY, WY

DRAWING NO: 2.2

JOB NO: 15-257-02

DISCRETE MARKINGS & STRIPINGS

STATION	SIDE	DESCRIPTION	COLOR	REMARK
1+90	CENTER	SLOW	WHITE	APPROACHING SP CEMETERY ROAD, FACING NORTH (SEE SHEET 5.0)
3+55±	CENTER	SLOW	WHITE	APPROACHING SP LOOP ROAD, FACING SOUTH (SEE SHEET 50.)
3+85+	CENTER	SLOW	WHITE	APPROACHING GRAND TETON CIRCLE, FACING NORTH (SEE SHEET 5.0)
2+50+	RT OFF PATH	STOP LINE	WHITE	SP CEMETERY ROAD (SEE SHEET 5.0)
2+50±	LT OFF PATH	YIELD LINE (2' X 3' TEETH WITH 1' SPACES- TEETH POINTING NORTH)	WHITE	ROAD APPROACHING SP LOOP RD CROSSING (SEE SHEET 5.0)
2+87±	RT	STOP LINE	WHITE	SP LOOP ROAD CROSSING (SEE SHEET 5.0)
3+60±	RT OFF PATH	YIELD LINE (2' X 3' TEETH WITH 1' SPACES- TEETH POINTING SOUTH)	WHITE	ROAD APPROACHING SP LOOP RD CROSSING (SEE SHEET 5.0)
3+19±	LT	STOP LINE	WHITE	NORTHERN CROSSING SP LOOP RD (SEE SHEET 5.0)
4+40±	LT OFF PATH	STOP LINE	WHITE	N GRAND TETON CIRCLE DR STOP
5+05±	CENTER	SLOW	WHITE	APPROACHING GRAND TETON CIRCLE NORTH, FACING SOUTH (SEE SHEET 5.1)
16+10+	CENTER	SLOW	WHITE	APPROACHING GRAND TETON CIRCLE SOUTH, FACING NORTH (SEE SHEET 5.2)
16+60+	LT OFF PATH	STOP LINE	WHITE	S GRAND TETON CIRCLE DR STOP (SEE SHEET 5.2)
17+35±	CENTER	SLOW	WHITE	APPROACHING GRAND TETON CIRCLE SOUTH, FACING SOUTH (SEE SHEET 5.2)
36+18±	CENTER	SLOW	WHITE	APPROACHING SP RANCH RD, FACING NORTH (SEE SHEET 5.3)
36+65±	RT OFF PATH	STOP LINE	WHITE	SP RANCH RD STOP (SEE SHEET 5.3)
37+55+	CENTER	SLOW	WHITE	APPROACHING SP RANCH RD, FACING SOUTH (SEE SHEET 5.3)
36+85+	LT OFF PATH	YIELD LINE (2' X 3' TEETH WITH 1' SPACES- TEETH POINTING NORTH)	WHITE	ROAD APPROACHING SP RANCH RD CROSSING (SEE SHEET 5.3)
37+05+	RT OFF PATH	YIELD LINE (2' X 3' TEETH WITH 1' SPACES- TEETH POINTING SOUTH)	WHITE	ROAD APPROACHING SP RANCH RD CROSSING (SEE SHEET 5.3)
44+30±	CENTER	SLOW	WHITE	APPROACHING WILSON RD, FACING NORTH (SEE SHEET 5.4)
44+85±	LT OFF PATH	YIELD LINE (2' X 3' TEETH WITH 1' SPACES- TEETH POINTING EAST)	WHITE	ROAD APPROACHING WILSON RD CROSSING (SEE SHEET 5.4)
44+85±	RT OFF PATH	STOP LINE	WHITE	WILSON RD STOP (SEE SHEET 5.4)
45+00±	RT OFF PATH	YIELD LINE (2' X 3' TEETH WITH 1' SPACES- TEETH POINTING WEST)	WHITE	ROAD APPROACHING WILSON RD CROSSING (SEE SHEET 5.4)
45+58±	CENTER	SLOW	WHITE	APPROACHING WILSON RD, FACING SOUTH (SEE SHEET 5.4)
74+20+	CENTER	SLOW	WHITE	APPROACHING SOUTHERN SP LOOP RD CROSSING, FACING WEST (SEE SHEET 5.6)
74+75±	RT	STOP LINE	WHITE	APPROACHING SOUTHERN SP LOOP RD CROSSING (SEE SHEET 5.6)
74+90±	LT OFF PATH	YIELD LINE (2' X 3' TEETH WITH 1' SPACES- TEETH POINTING EAST)	WHITE	APPROACHING SOUTHERN SP LOOP RD CROSSING, FACING EAST (SEE SHEET 5.6)
75+05±	RT OFF PATH	YIELD LINE (2' X 3' TEETH WITH 1' SPACES- TEETH POINTING EAST)	WHITE	APPROACHING SOUTHERN SP LOOP RD CROSSING, FACING WEST (SEE SHEET 5.6)
75+15±	LT	STOP LINE	WHITE	APPROACHING SOUTHERN SP LOOP RD CROSSING (SEE SHEET 5.6)
75+75±	CENTER	SLOW	WHITE	APPROACHING SOUTHERN SP LOOP RD CROSSING, FACING EAST (SEE SHEET 5.6)
M:00+65±	CENTER	SLOW	WHITE	APPROACHING MELODY CROSSING, FACING NORTH (SEE SHEET 5.7)
M:00+38+	LT	STOP LINE	WHITE	APPROACHING MELODY CROSSING (SEE SHEET 5.7)
105+18±	LT OFF PATH	YIELD LINE (2' X 3' TEETH WITH 1' SPACES- TEETH POINTING WEST)	WHITE	APPROACHING MELODY CROSSING, FACING WEST (SEE SHEET 5.7)
105+90±	LT OFF PATH	YIELD LINE (2' X 3' TEETH WITH 1' SPACES- TEETH POINTING EAST)	WHITE	APPROACHING MELODY CROSSING, FACING EAST (SEE SHEET 5.7)

CONTINUOUS MARKINGS & STRIPINGS

START STATION	END STATION	DESCRIPTION	COLOR	RELATIVE LOCATION/FEATURE	REMARKS
1+50±	2+90±	4" CL STRIPE	YELLOW	NORTHERN CROSSING OF SP LOOP RD	SEE SHEET 5.0
2+90	3+15	CROSSWALK	WHITE	2'W x 10'L @ 5'-O.C. AT NORTHERN CROSSING OF SP LOOP RD	SEE SHEET 5.0
3+20+	3+55+	4" CL STRIPE	YELLOW	NORTHERN CROSSING OF SP LOOP RD	SEE SHEET 5.0
3+58+	3+85+	4" CL STRIPE	YELLOW	APPROACHING GRAND TETON CIRCLE DR CROSSING	SEE SHEET 5.0
3+90+	4+30+	4" CL STRIPE	YELLOW	APPROACHING GRAND TETON CIRCLE DR CROSSING	SEE SHEET 5.1
4+30+	4+50+	CROSSWALK	WHITE	2'W x 10'L @ 5'-O.C. AT NORTHERN CROSSING OF GRAND TETON CIRCLE DRIVE	SEE SHEET 5.1
4+50+	5+00+	4" CL STRIPE	YELLOW	APPROACHING GRAND TETON CIRCLE DR NORTH CROSSING	SEE SHEET 5.1
5+05+	5+55+	4" CL STRIPE	YELLOW	APPROACHING GRAND TETON CIRCLE DR NORTH CROSSING	SEE SHEET 5.1
15+50+	16+08+	4" CL STRIPE	YELLOW	APPROACHING GRAND TETON CIRCLE DR SOUTH CROSSING	SEE SHEET 5.2
16+10+	16+50+	4" CL STRIPE	YELLOW	APPROACHING GRAND TETON CIRCLE DR SOUTH CROSSING	SEE SHEET 5.2
16+50+	16+90+	CROSSWALK	WHITE	2'W x 10'L @ 5'-O.C. AT SOUTHERN CROSSING OF GRAND TETON CIRCLE DRIVE	SEE SHEET 5.2
16+90+	17+30+	4" CL STRIPE	YELLOW	APPROACHING GRAND TETON CIRCLE DR SOUTH CROSSING	SEE SHEET 5.2
17+35+	17+90+	4" CL STRIPE	YELLOW	APPROACHING GRAND TETON CIRCLE DR SOUTH CROSSING	SEE SHEET 5.2
35+82+	36+15+	4" CL STRIPE	YELLOW	APPROACHING SP RANCH RD CROSSING	SEE SHEET 5.3
36+20+	36+81+	4" CL STRIPE	YELLOW	APPROACHING SP RANCH RD CROSSING	SEE SHEET 5.3
36+81+	37+10+	CROSSWALK	WHITE	2'W x 10'L @ 5'-O.C. AT CROSSING OF SP RANCH RD	SEE SHEET 5.3
37+10+	37+55+	4" CL STRIPE	YELLOW	APPROACHING SP RANCH RD CROSSING	SEE SHEET 5.3
37+60+	38+10+	4" CL STRIPE	YELLOW	APPROACHING SP RANCH RD CROSSING	SEE SHEET 5.3
43+98+	44+25+	4" CL STRIPE	YELLOW	APPROACHING WILSON RD CROSSING	SEE SHEET 5.5
44+30+	44+80+	4" CL STRIPE	YELLOW	APPROACHING WILSON RD CROSSING	SEE SHEET 5.5
44+80+	45+08+	CROSSWALK	WHITE	2'W x 10'L @ 5'-O.C. AT CROSSING OF WILSON ROAD	SEE SHEET 5.5
45+08+	45+55+	4" CL STRIPE	YELLOW	APPROACHING WILSON RD CROSSING	SEE SHEET 5.5
45+62+	46+08+	4" CL STRIPE	YELLOW	APPROACHING WILSON RD CROSSING	SEE SHEET 5.5
73+85+	74+18+	4" CL STRIPE	YELLOW	APPROACHING SOUTHERN SP LOOP RD CROSSING	SEE SHEET 5.6
74+22+	74+80+	4" CL STRIPE	YELLOW	APPROACHING SOUTHERN SP LOOP RD CROSSING	SEE SHEET 5.6
74+80+	75+10+	CROSSWALK	WHITE	2'W x 10'L @ 5'-O.C. AT SOUTHERN CROSSING OF SP LOOP ROAD	SEE SHEET 5.6
75+10+	75+73+	4" CL STRIPE	YELLOW	APPROACHING SOUTHERN SP LOOP RD CROSSING	SEE SHEET 5.6
75+77+	76+10+	4" CL STRIPE	YELLOW	APPROACHING SOUTHERN SP LOOP RD CROSSING	SEE SHEET 5.6
104+55+	106+55+	4" CL STRIPE	YELLOW	APPROACHING MELODY RANCH CROSSING	SEE SHEET 5.7
105+55+	0+08+	4" CL STRIPE	YELLOW	LEFT OFF PATH TOWARDS MELODY CROSSING	SEE SHEET 5.7
0+08+	0+30+	CROSSWALK	WHITE	2'W x 10'L @ 5'-O.C. AT SOUTHERN CROSSING OF SP LOOP ROAD	SEE SHEET 5.7
00+38+	00+60+	4" CL STRIPE	YELLOW	APPROACHING SOUTHERN SP LOOP RD CROSSING	SEE SHEET 5.7
75+77+	76+10+	4" CL STRIPE	YELLOW	APPROACHING SOUTHERN SP LOOP RD CROSSING	SEE SHEET 5.7

1
2.3 STRIPING SCHEDULE

	REV.
DATE	5/13/2016
SURVEYED	NE
ENGINEERED	DD
DRAWN	DB
CHECKED	DD
APPROVED	DD

NELSON ENGINEERING
P.O. BOX 1599, JACKSON WYOMING (307) 733-2087

DRAWING TITLE
STRIPING SCHEDULE

JOB TITLE
SOUTH PARK LOOP
CONNECTOR PATHWAY PROJECT
TETON COUNTY, WY

DRAWING NO
2.3

JOB NO
15-257-02

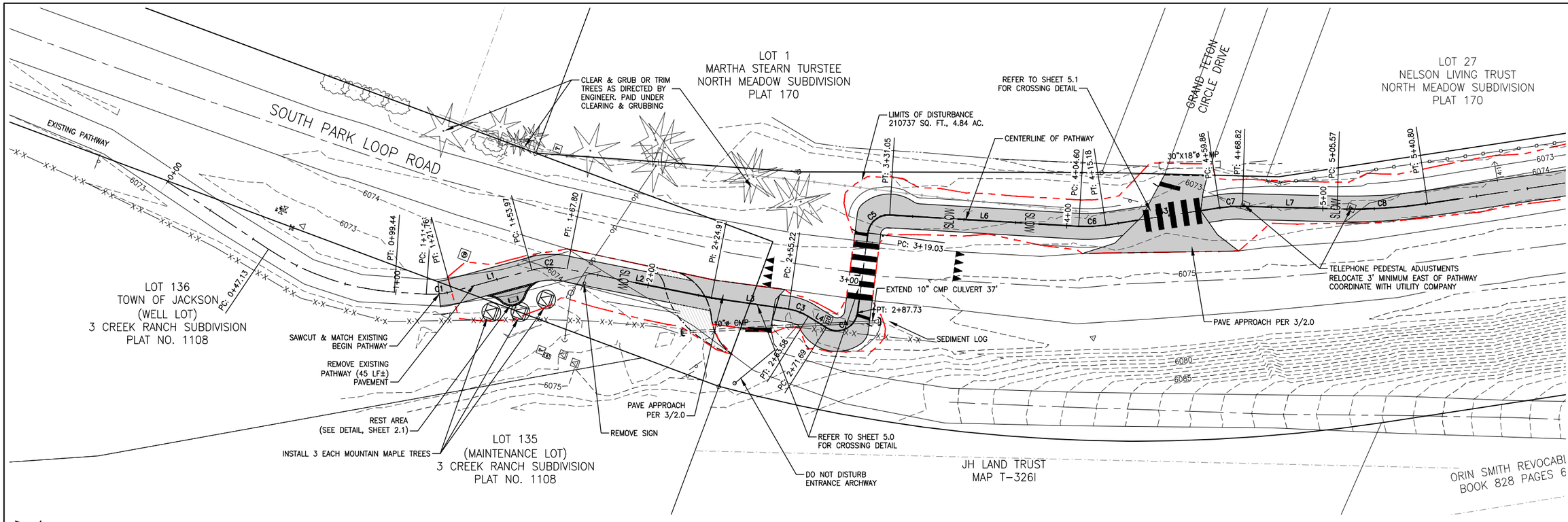

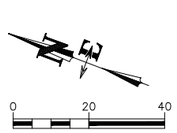

CONTRACTOR NOTE:

CAUTION: UNDERGROUND UTILITY LOCATIONS ARE NOT GUARANTEED, NOR IS THERE ANY GUARANTEE THAT ALL EXISTING UTILITIES (WHETHER FUNCTIONAL OR ABANDONED) WITHIN THE PROJECT AREA ARE SHOWN ON THESE DRAWINGS. THE CONTRACTOR SHALL DETERMINE THE EXACT LOCATION OF ALL UNDERGROUND UTILITIES BEFORE STARTING WORK. THE CONTRACTOR SHALL BE RESPONSIBLE FOR ALL DAMAGE RESULTING FROM CONTRACTORS WORK.

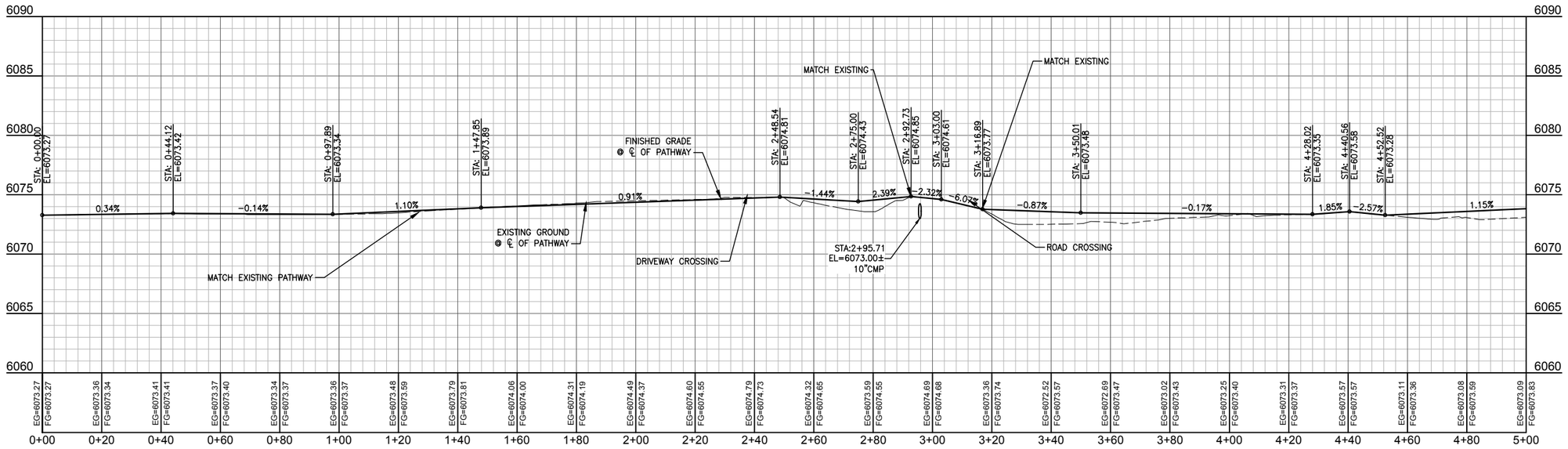

REV.	DATE	
	5/13/2016	
	SURVEYED	NE
	ENGINEERED	DD
	DRAWN	DB
	CHECKED	DD
	APPROVED	DD

NELSON ENGINEERING
P.O. BOX 1599, JACKSON WYOMING (307) 733-2087

DRAWING TITLE
PATHWAY ALIGNMENT
PLAN & PROFILE
STA. 0+00.00 - 5+00.00

JOB TITLE
SOUTH PARK LOOP
CONNECTOR PATHWAY PROJECT
TETON COUNTY, WY

DRAWING NO 3.0

JOB NO 15-257-02

S:\Proj\2015\257-02 (Design - South Park Loop Pathway Connector\Drawings\Layout Drawings\PKP PATHWAY CL 1-3.dwg (P&P=0&00 - 5+00.00) - May 15 2016 02:31:7 pm PLOTTED BY: ivan Schnur DWG FORMAT: 191

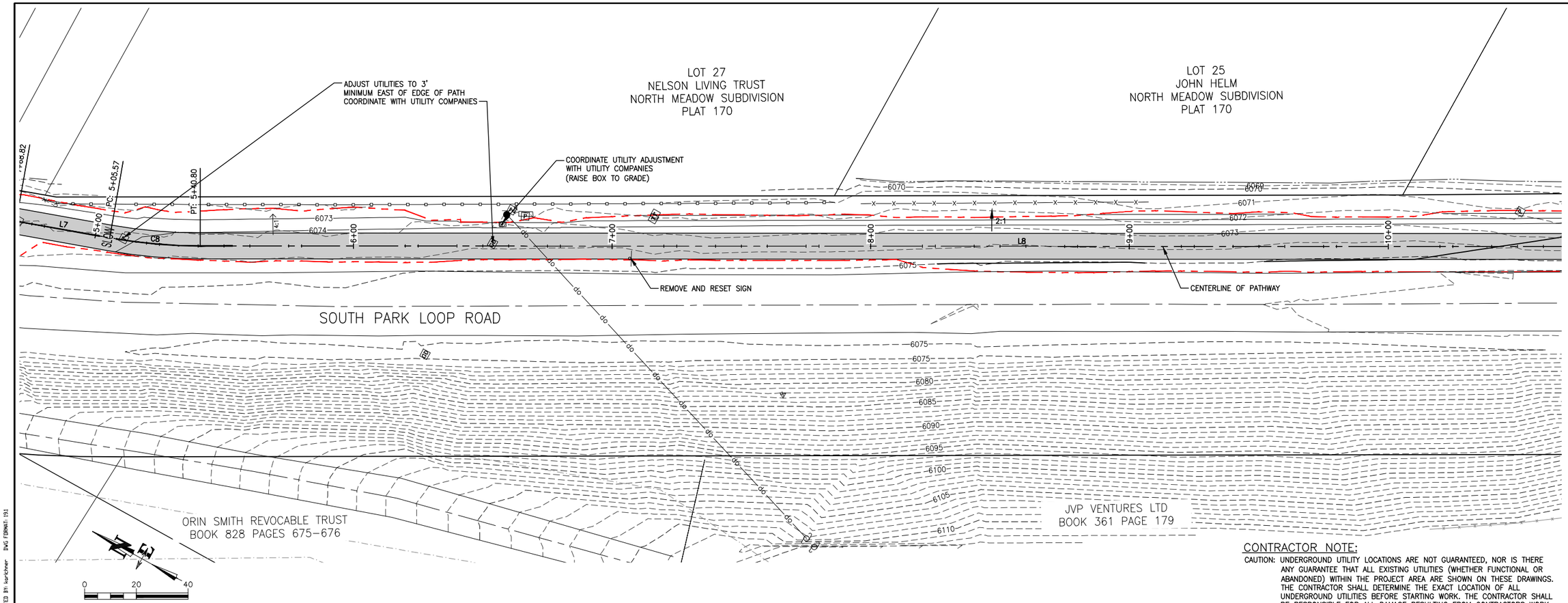

CONTRACTOR NOTE:

CAUTION: UNDERGROUND UTILITY LOCATIONS ARE NOT GUARANTEED, NOR IS THERE ANY GUARANTEE THAT ALL EXISTING UTILITIES (WHETHER FUNCTIONAL OR ABANDONED) WITHIN THE PROJECT AREA ARE SHOWN ON THESE DRAWINGS. THE CONTRACTOR SHALL DETERMINE THE EXACT LOCATION OF ALL UNDERGROUND UTILITIES BEFORE STARTING WORK. THE CONTRACTOR SHALL BE RESPONSIBLE FOR ALL DAMAGE RESULTING FROM CONTRACTORS WORK.

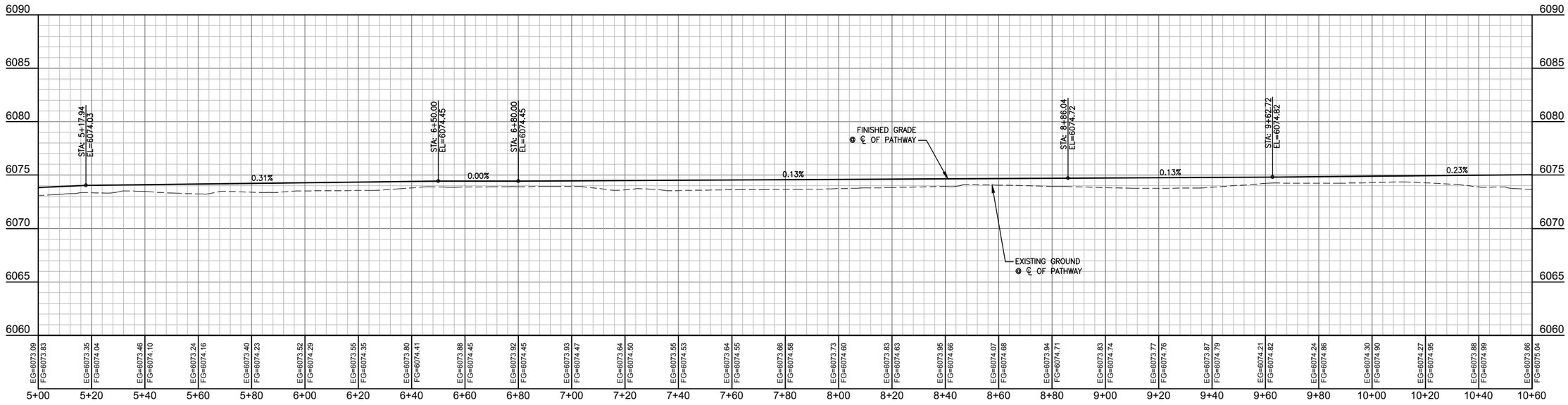

DATE	5/13/2016
SURVEYED	NE
ENGINEERED	DD
DRAWN	DB
CHECKED	DD
APPROVED	DD
REV.	

NELSON ENGINEERING
P.O. BOX 1599, JACKSON WYOMING (307) 733-2087

DRAWING TITLE
PATHWAY ALIGNMENT
PLAN & PROFILE
STA. 5+00.00 - 10+60.00

JOB TITLE
SOUTH PARK LOOP
CONNECTOR PATHWAY PROJECT
TETON COUNTY, WY

DRAWING NO 3.1

JOB NO 15-257-02

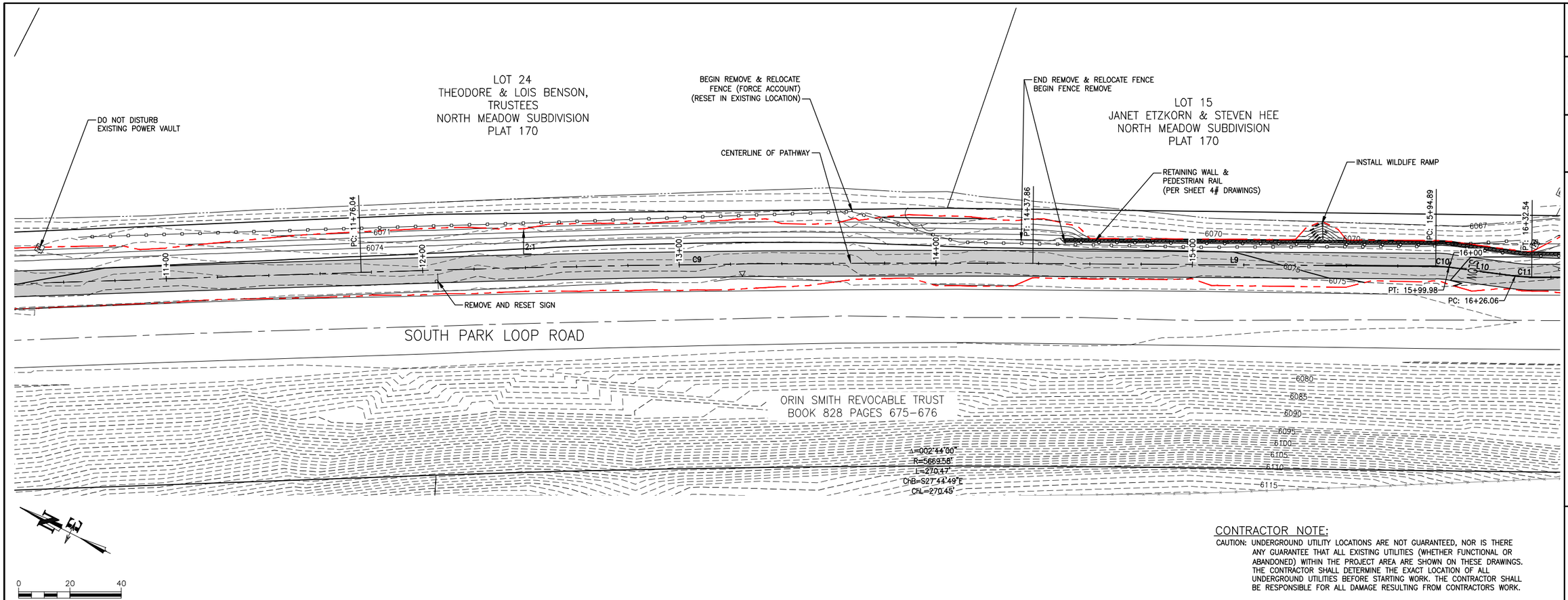

CONTRACTOR NOTE:

CAUTION: UNDERGROUND UTILITY LOCATIONS ARE NOT GUARANTEED, NOR IS THERE ANY GUARANTEE THAT ALL EXISTING UTILITIES (WHETHER FUNCTIONAL OR ABANDONED) WITHIN THE PROJECT AREA ARE SHOWN ON THESE DRAWINGS. THE CONTRACTOR SHALL DETERMINE THE EXACT LOCATION OF ALL UNDERGROUND UTILITIES BEFORE STARTING WORK. THE CONTRACTOR SHALL BE RESPONSIBLE FOR ALL DAMAGE RESULTING FROM CONTRACTORS WORK.

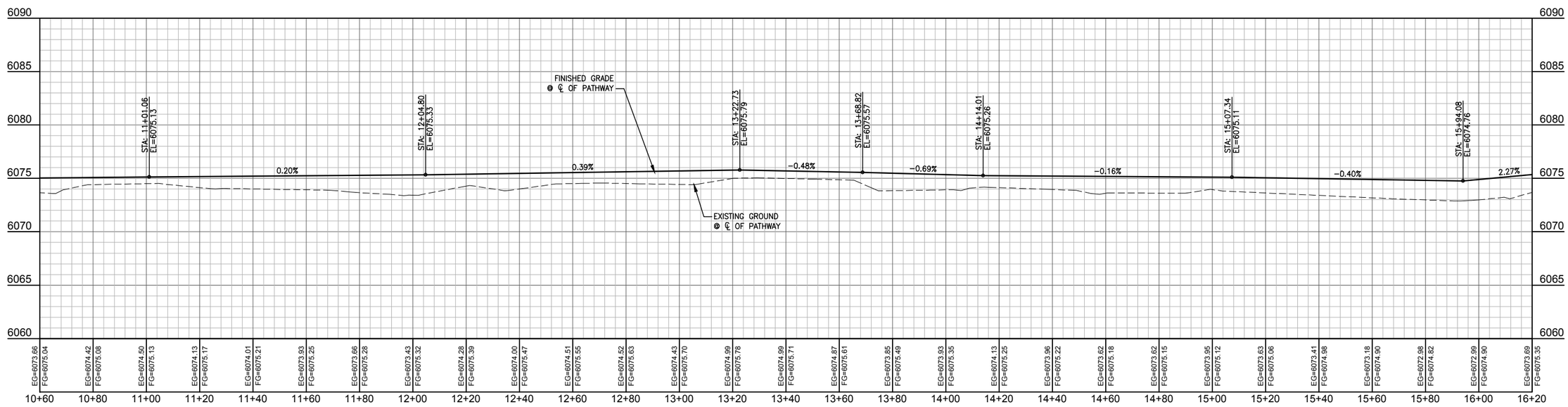

DATE	5/13/2016	REV.
SURVEYED	NE	
ENGINEERED	DD	
DRAWN	DB	
CHECKED	DD	
APPROVED	DD	

NELSON ENGINEERING
P.O. BOX 1599, JACKSON WYOMING (307) 733-2087

DRAWING TITLE
PATHWAY ALIGNMENT
PLAN & PROFILE
STA. 10+60.00 - 16+20.00

JOB TITLE
SOUTH PARK LOOP
CONNECTOR PATHWAY PROJECT
TETON COUNTY, WY

DRAWING NO 3.2

JOB NO 15-257-02

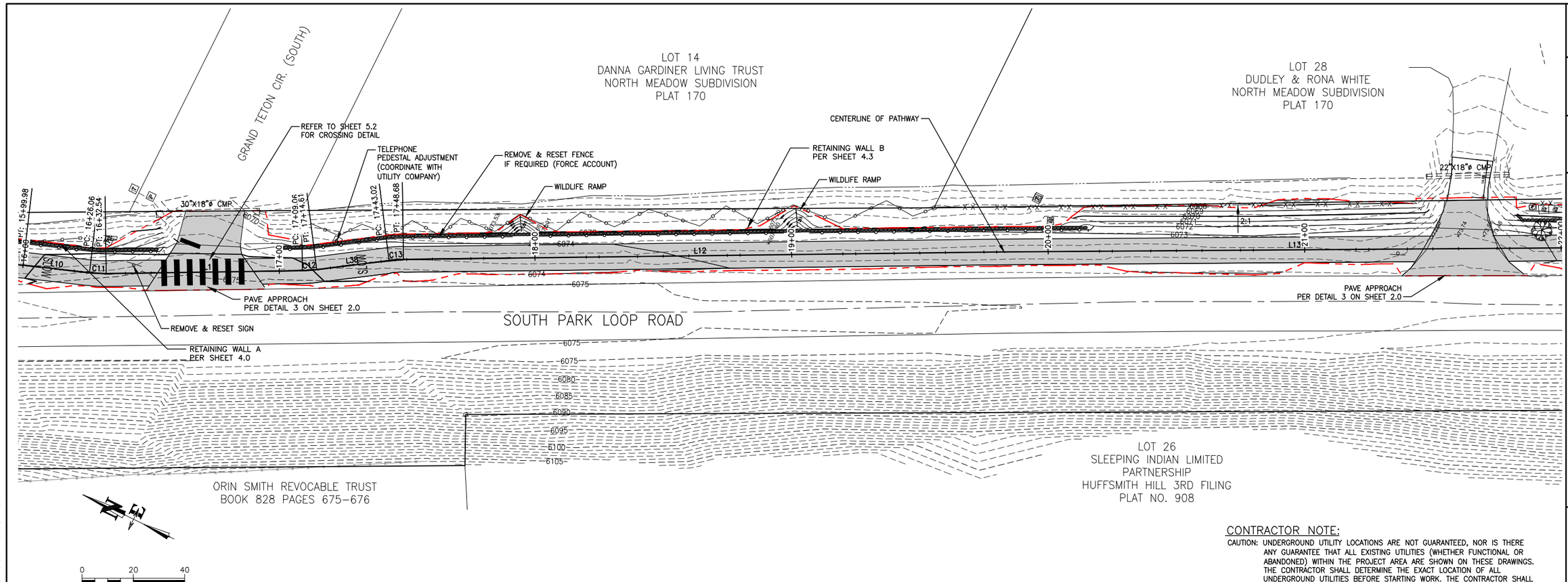

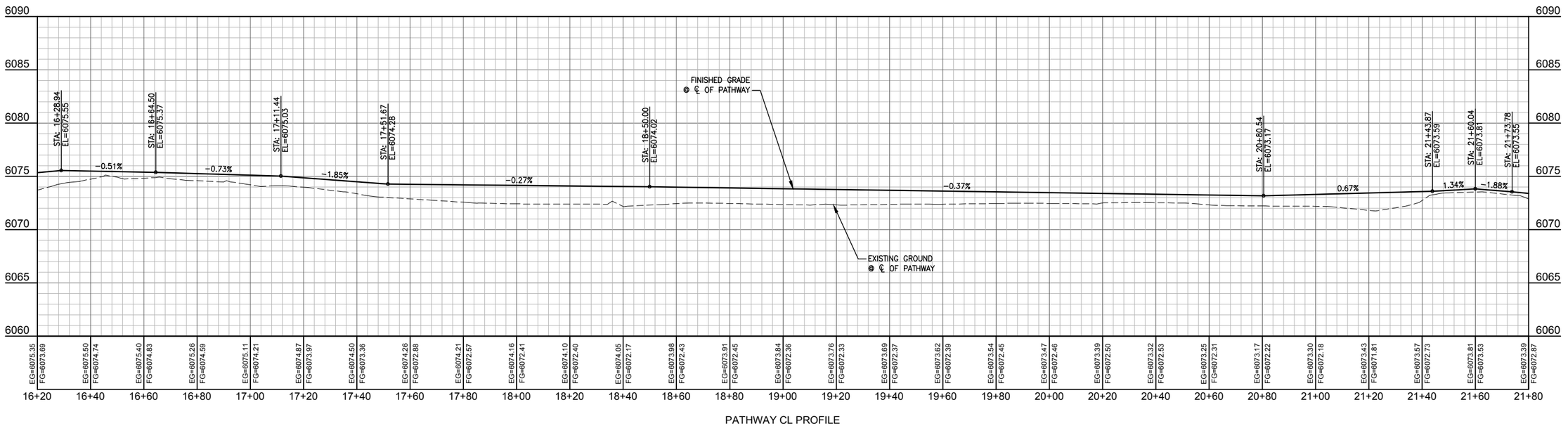

CONTRACTOR NOTE:

CAUTION: UNDERGROUND UTILITY LOCATIONS ARE NOT GUARANTEED, NOR IS THERE ANY GUARANTEE THAT ALL EXISTING UTILITIES (WHETHER FUNCTIONAL OR ABANDONED) WITHIN THE PROJECT AREA ARE SHOWN ON THESE DRAWINGS. THE CONTRACTOR SHALL DETERMINE THE EXACT LOCATION OF ALL UNDERGROUND UTILITIES BEFORE STARTING WORK. THE CONTRACTOR SHALL BE RESPONSIBLE FOR ALL DAMAGE RESULTING FROM CONTRACTORS WORK.

REV.	DATE	
	5/13/2016	
	SURVEYED	NE
	ENGINEERED	DD
	DRAWN	DB
	CHECKED	DD
	APPROVED	DD

NELSON ENGINEERING
P.O. BOX 1599, JACKSON WYOMING (307) 733-2087

DRAWING TITLE: PATHWAY ALIGNMENT PLAN & PROFILE STA. 16+20.00 - 21+80.00

JOB TITLE: SOUTH PARK LOOP CONNECTOR PATHWAY PROJECT TETON COUNTY, WY

DRAWING NO 3.3

JOB NO 15-257-02

S:\Proj\2015\257-02 \Design - South Park Loop Pathway Connector\Drawings\Layout Drawings\PNP PATHWAY CL 4-6.DWG <STA 16+20.00 - 21+80.00> - May 15 2016 01:25:13 pm PLOTTED BY karchner DWG FORMAT: 151

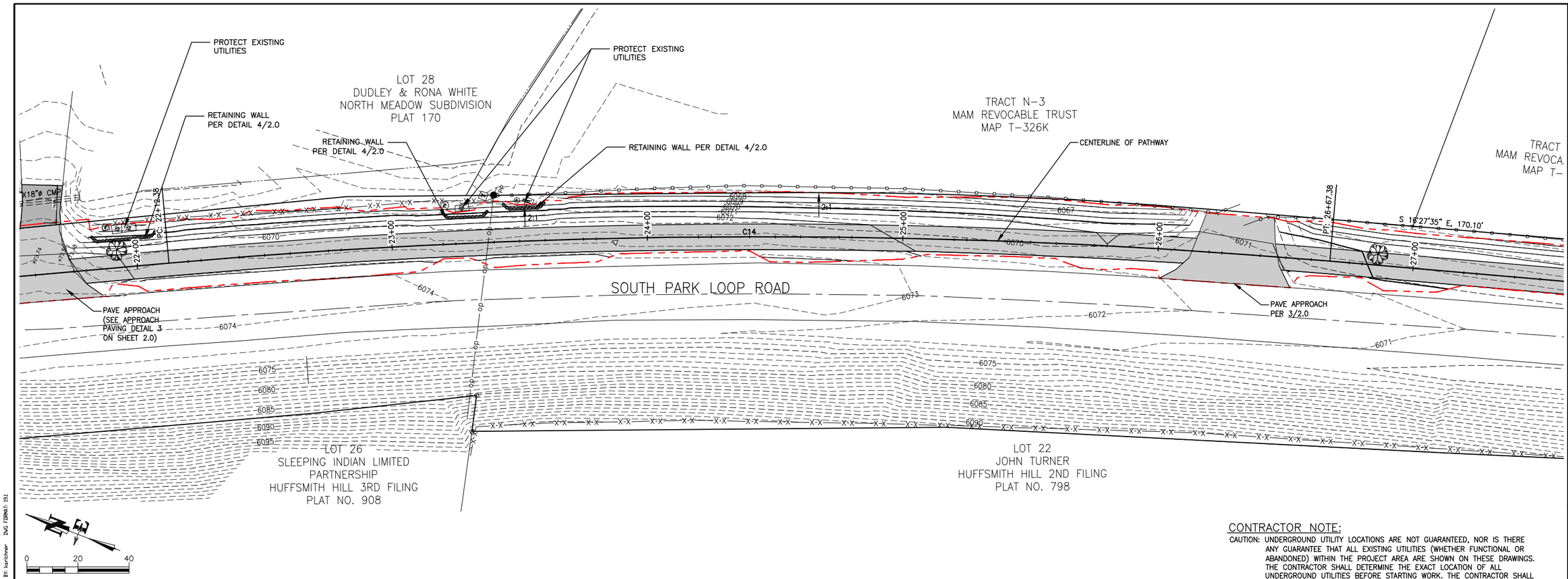

CONTRACTOR NOTE:

CAUTION: UNDERGROUND UTILITY LOCATIONS ARE NOT GUARANTEED, NOR IS THERE ANY GUARANTEE THAT ALL EXISTING UTILITIES (WHETHER FUNCTIONAL OR ABANDONED) WITHIN THE PROJECT AREA ARE SHOWN ON THESE DRAWINGS. THE CONTRACTOR SHALL DETERMINE THE EXACT LOCATION OF ALL UNDERGROUND UTILITIES BEFORE STARTING WORK. THE CONTRACTOR SHALL BE RESPONSIBLE FOR ALL DAMAGE RESULTING FROM CONTRACTORS WORK.

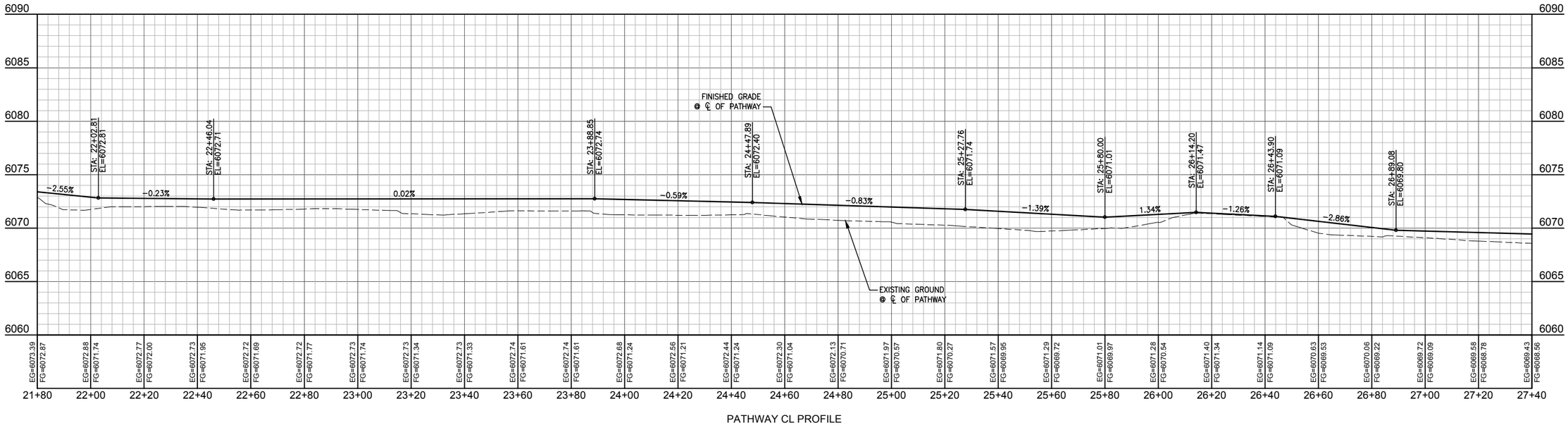

PATHWAY CL PROFILE

DATE	5/13/2016	REV.
SURVEYED	NE	
ENGINEERED	DD	
DRAWN	DB	
CHECKED	DD	
APPROVED	DD	

NELSON ENGINEERING
P.O. BOX 1599, JACKSON WYOMING (307) 733-2087

DRAWING TITLE
PATHWAY ALIGNMENT
PLAN & PROFILE
STA. 21+80.00 - 27+40.00

JOB TITLE
SOUTH PARK LOOP
CONNECTOR PATHWAY PROJECT
TETON COUNTY, WY

DRAWING NO 3.4

JOB NO 15-257-02

S:\Proj2015\257-02 (Design - South Park Loop Pathway Connector)\Drawings\Layout Drawings\P&P PATHWAY CL 4-6.DWG (STA. 21+80.00 - 27+40.00) - May 15 2016 01:25:39 pm PLOTTED BY: karichner DWG FORMAT: 191

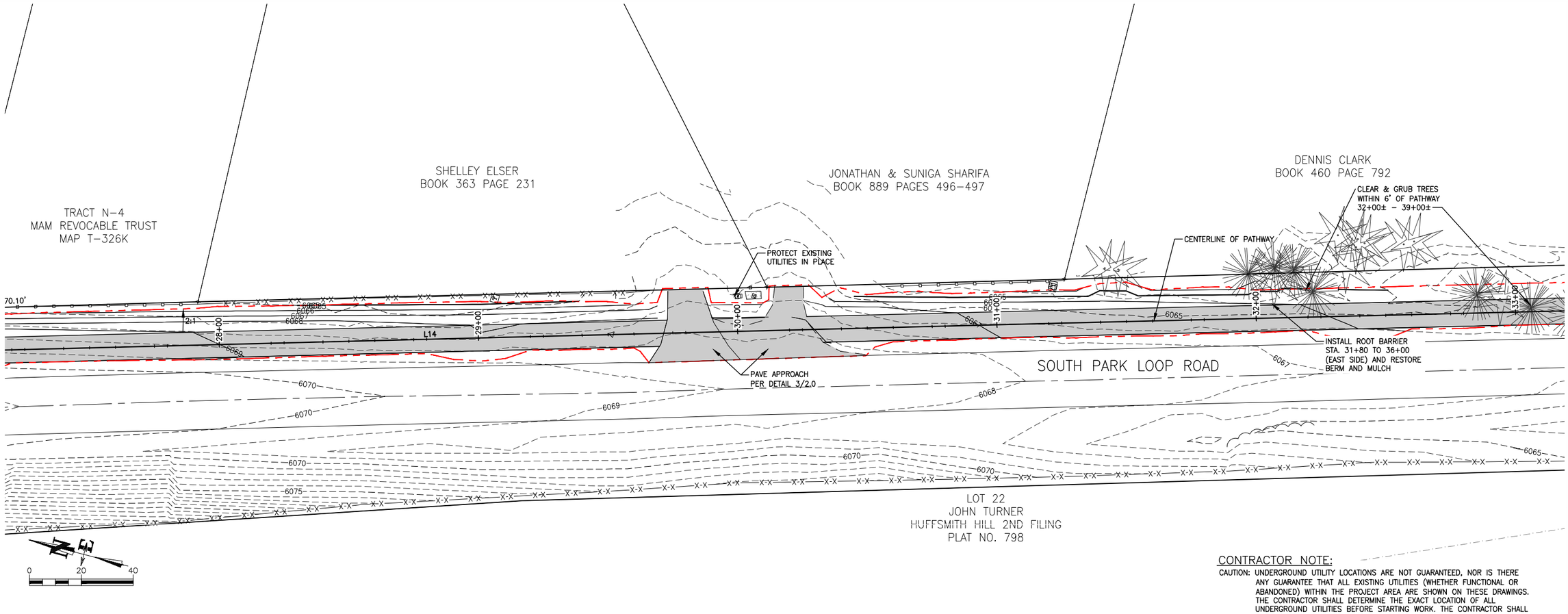

CONTRACTOR NOTE:

CAUTION: UNDERGROUND UTILITY LOCATIONS ARE NOT GUARANTEED, NOR IS THERE ANY GUARANTEE THAT ALL EXISTING UTILITIES (WHETHER FUNCTIONAL OR ABANDONED) WITHIN THE PROJECT AREA ARE SHOWN ON THESE DRAWINGS. THE CONTRACTOR SHALL DETERMINE THE EXACT LOCATION OF ALL UNDERGROUND UTILITIES BEFORE STARTING WORK. THE CONTRACTOR SHALL BE RESPONSIBLE FOR ALL DAMAGE RESULTING FROM CONTRACTORS WORK.

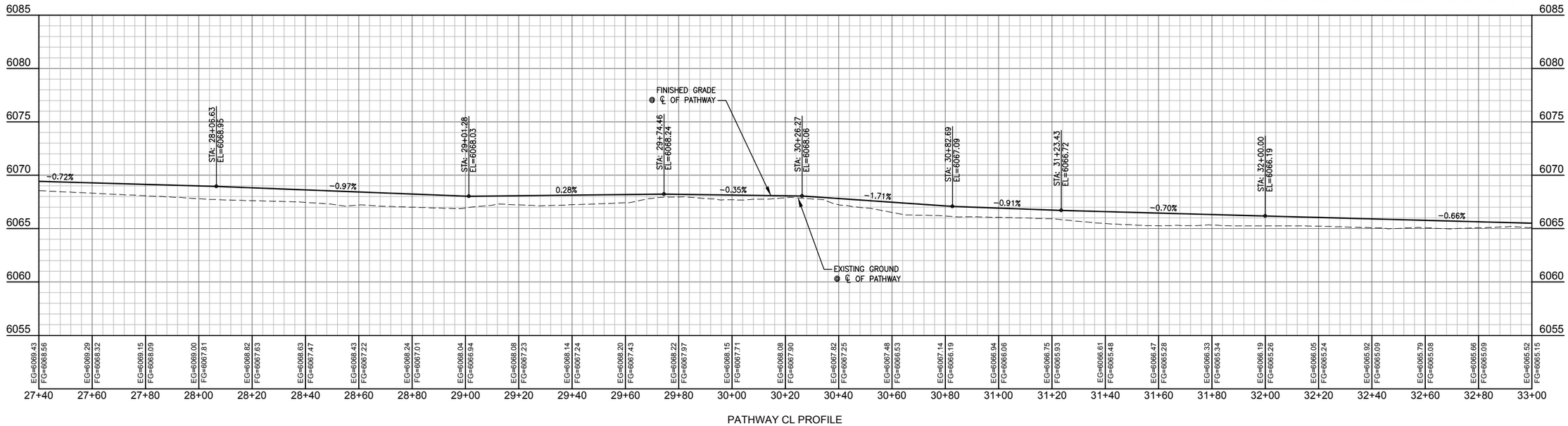

PATHWAY CL PROFILE

DATE	5/13/2016	REV.
SURVEYED	NE	
ENGINEERED	DD	
DRAWN	DB	
CHECKED	DD	
APPROVED	DD	

NELSON ENGINEERING
P.O. BOX 1599, JACKSON WYOMING (307) 733-2087

DRAWING TITLE
PATHWAY ALIGNMENT
PLAN & PROFILE
STA. 27+40.00 - 33+00.00

JOB TITLE
SOUTH PARK LOOP
CONNECTOR PATHWAY PROJECT
TETON COUNTY, WY

DRAWING NO 3.5

JOB NO 15-257-02

S:\Proj2015\257-02 CDesign - South Park Loop Pathway Connector\Drawings\Layout Drawings\P&P PATHWAY CL 4-6.DWG (STA 27+40.00 - 33+00.00) - May 16 2016 11:12:10 am PLOTTED BY: karichner DWG FORMAT: 19.1

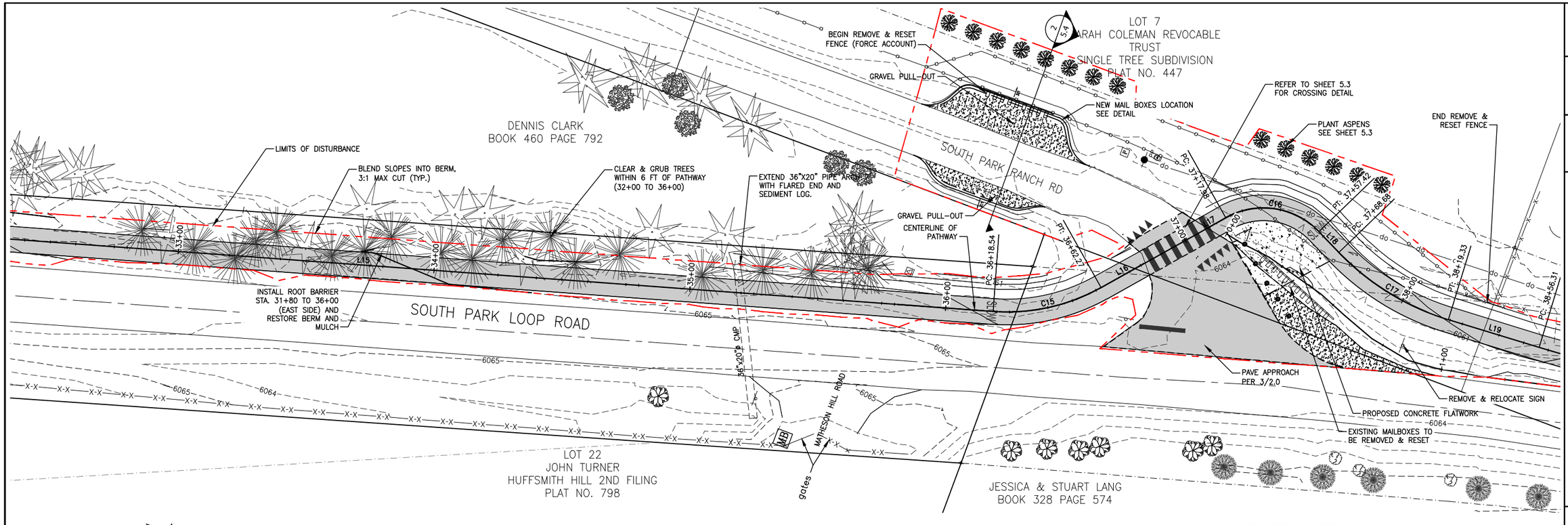

CONTRACTOR NOTE:

CAUTION: UNDERGROUND UTILITY LOCATIONS ARE NOT GUARANTEED, NOR IS THERE ANY GUARANTEE THAT ALL EXISTING UTILITIES (WHETHER FUNCTIONAL OR ABANDONED) WITHIN THE PROJECT AREA ARE SHOWN ON THESE DRAWINGS. THE CONTRACTOR SHALL DETERMINE THE EXACT LOCATION OF ALL UNDERGROUND UTILITIES BEFORE STARTING WORK. THE CONTRACTOR SHALL BE RESPONSIBLE FOR ALL DAMAGE RESULTING FROM CONTRACTORS WORK.

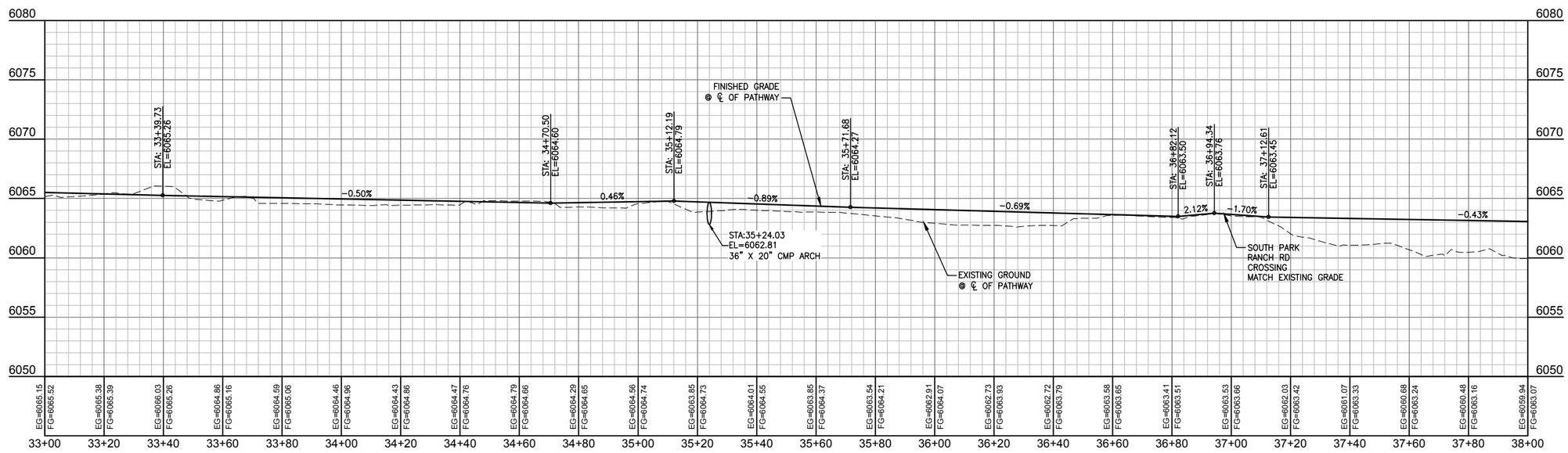

REV.	DATE	
	5/13/2016	SURVEYED
	NE	ENGINEERED
	DD	DRAWN
	DB	CHECKED
	DD	APPROVED
	DD	

NELSON ENGINEERING
P.O. BOX 1599, JACKSON WYOMING (307) 733-2087

DRAWING TITLE
PATHWAY ALIGNMENT
PLAN & PROFILE
STA. 33+00.00 - 38+00.00

JOB TITLE
SOUTH PARK LOOP
CONNECTOR PATHWAY PROJECT
TETON COUNTY, WY

DRAWING NO 3.6

JOB NO 15-257-02

S:\Proj\2015\257-02 (Design - South Park Loop Pathway Connector)\Drawings\Layout Drawings\PNP PATHWAY CL 7-3.dwg CSTA 33+00.00 - 38+00.00 - May 16 2016 11:09:53 am PLOTTED BY: kwirschner DWG FORMAT: 15I

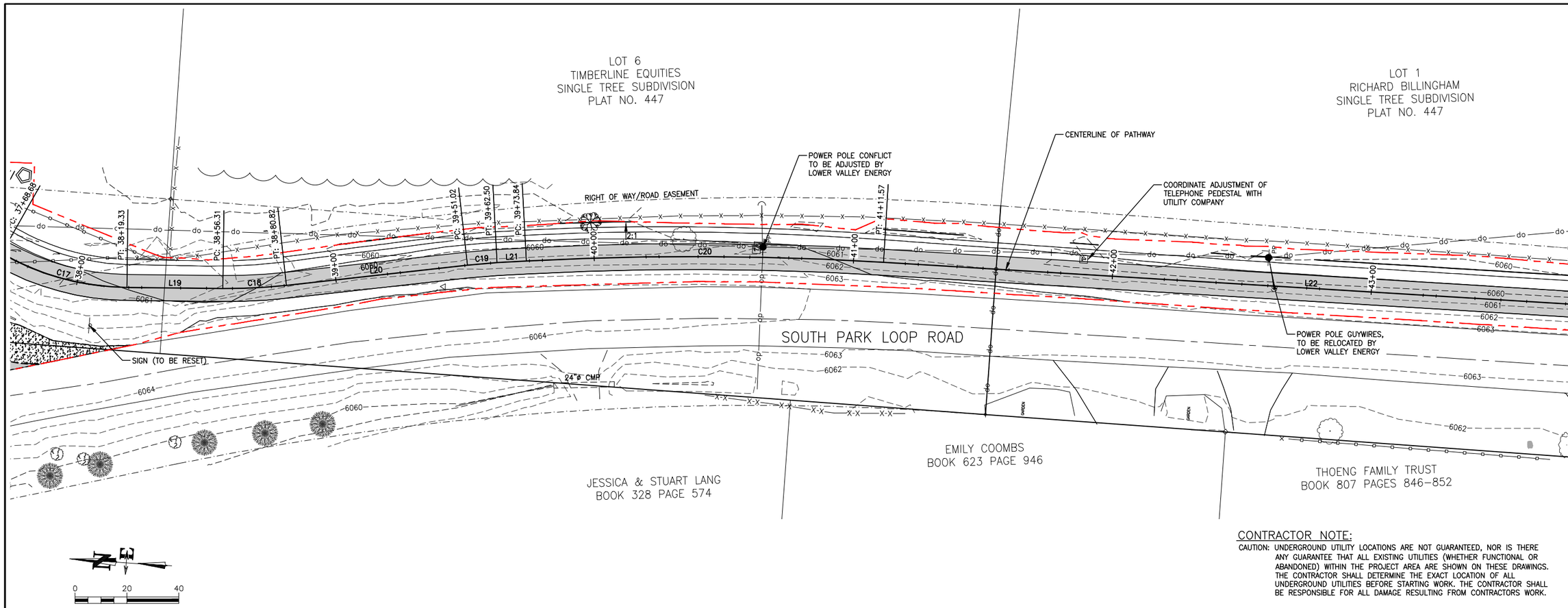

CONTRACTOR NOTE:

CAUTION: UNDERGROUND UTILITY LOCATIONS ARE NOT GUARANTEED, NOR IS THERE ANY GUARANTEE THAT ALL EXISTING UTILITIES (WHETHER FUNCTIONAL OR ABANDONED) WITHIN THE PROJECT AREA ARE SHOWN ON THESE DRAWINGS. THE CONTRACTOR SHALL DETERMINE THE EXACT LOCATION OF ALL UNDERGROUND UTILITIES BEFORE STARTING WORK. THE CONTRACTOR SHALL BE RESPONSIBLE FOR ALL DAMAGE RESULTING FROM CONTRACTORS WORK.

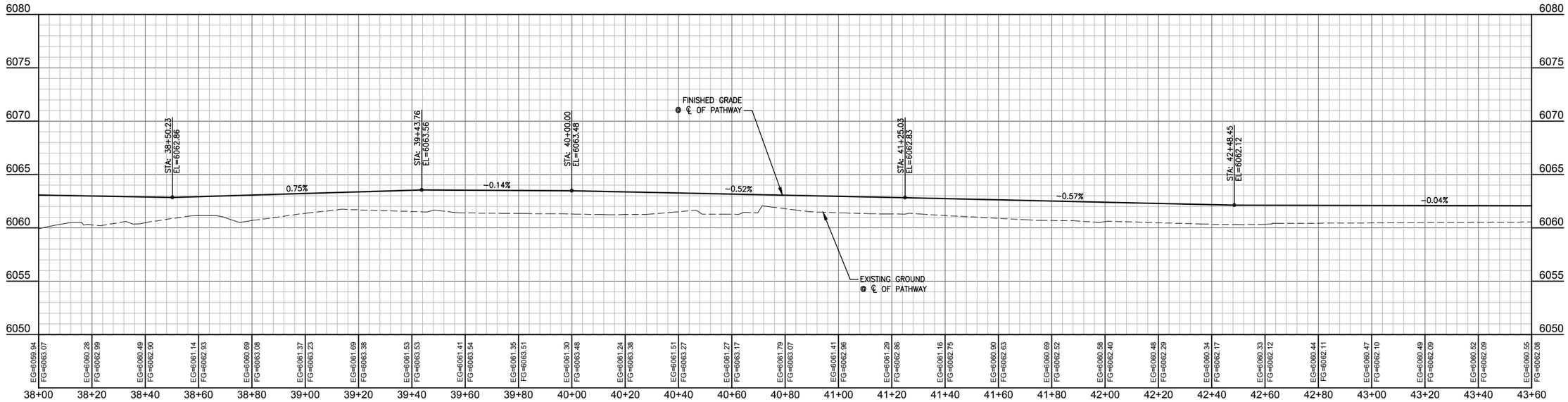

DATE	5/13/2016
SURVEYED	NE
ENGINEERED	DD
DRAWN	DB
CHECKED	DD
APPROVED	DD

REV.

NELSON ENGINEERING
P.O. BOX 1599, JACKSON WYOMING (307) 733-2087

DRAWING TITLE
PATHWAY ALIGNMENT
PLAN & PROFILE
STA. 38+00.00 - 43+60.00

JOB TITLE
SOUTH PARK LOOP
CONNECTOR PATHWAY PROJECT
TETON COUNTY, WY

DRAWING NO
3.7

JOB NO
15-257-02

S:\Proj2015\257-02 CDesign - South Park Loop Pathway Connector\Drawings\Layout Drawings\P&P PATHWAY CL 7-9.dwg <STA. 38+00.00 - 43+60.00> - May 15 2016 01:27:28 pm PLOTTED BY: kerichner DWG FORMAT: 19.1

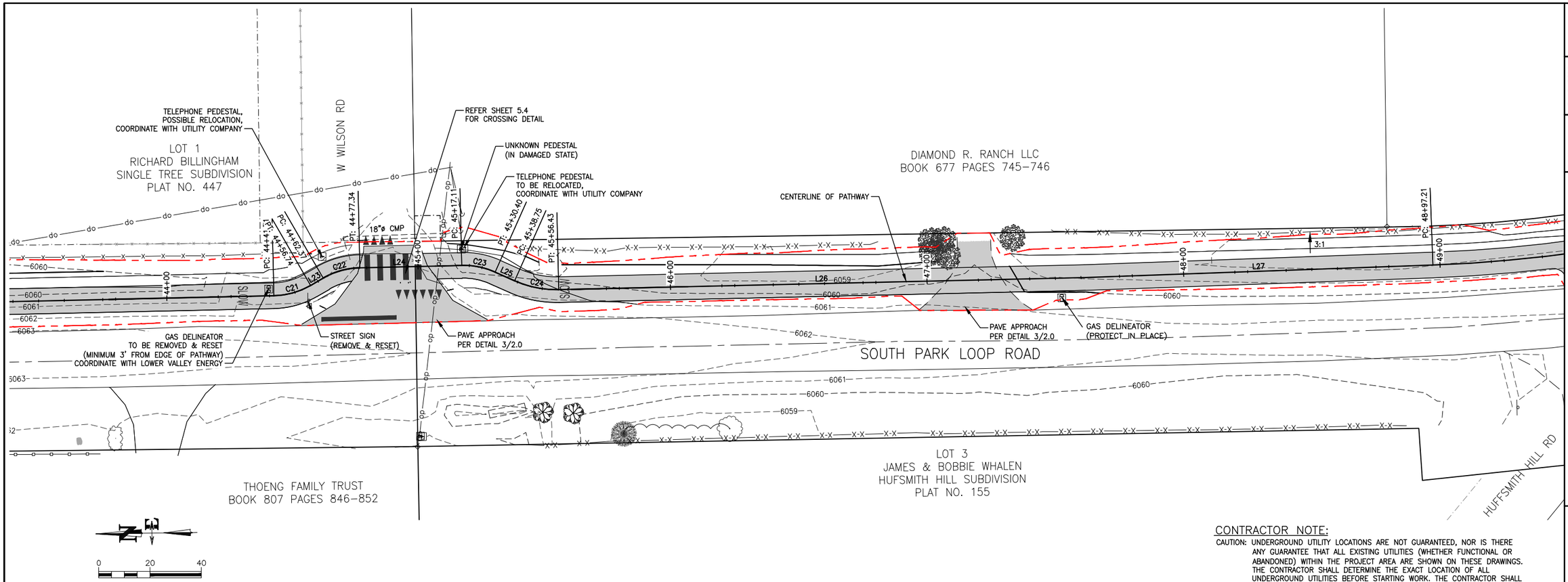

CONTRACTOR NOTE:

CAUTION: UNDERGROUND UTILITY LOCATIONS ARE NOT GUARANTEED, NOR IS THERE ANY GUARANTEE THAT ALL EXISTING UTILITIES (WHETHER FUNCTIONAL OR ABANDONED) WITHIN THE PROJECT AREA ARE SHOWN ON THESE DRAWINGS. THE CONTRACTOR SHALL DETERMINE THE EXACT LOCATION OF ALL UNDERGROUND UTILITIES BEFORE STARTING WORK. THE CONTRACTOR SHALL BE RESPONSIBLE FOR ALL DAMAGE RESULTING FROM CONTRACTORS WORK.

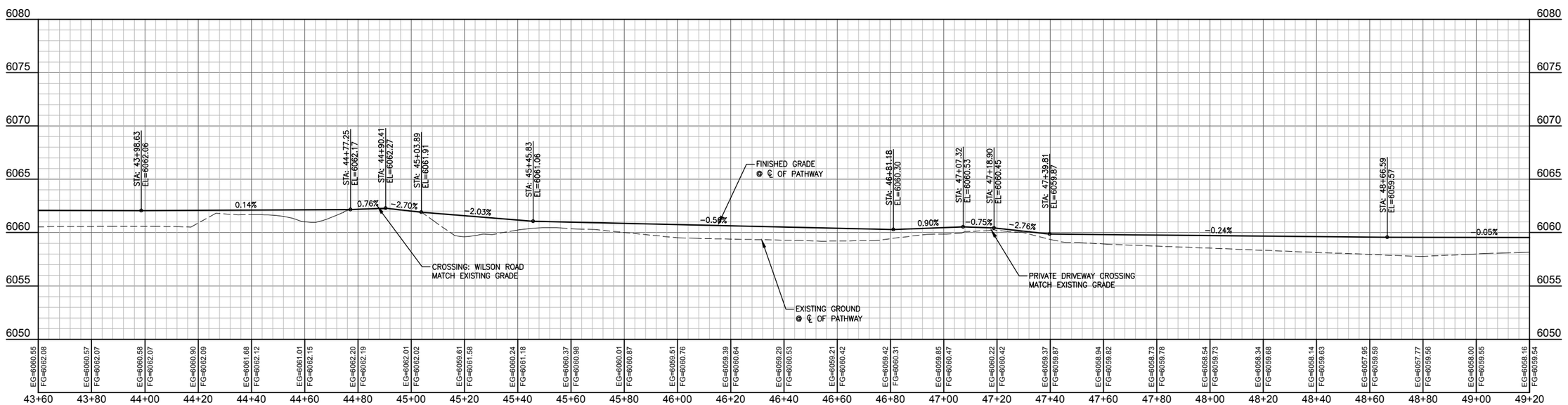

REV.	DATE	SURVEYED	ENGINEERED	DRAWN	CHECKED	APPROVED
	5/13/2016	NE	DD	DB	DD	DD

NELSON ENGINEERING
P.O. BOX 1599, JACKSON WYOMING (307) 733-2087

DRAWING TITLE: PATHWAY ALIGNMENT PLAN & PROFILE STA. 43+60.00 - 49+20.00

JOB TITLE: SOUTH PARK LOOP CONNECTOR PATHWAY PROJECT TETON COUNTY, WY

DRAWING NO 3.8

JOB NO 15-257-02

S:\Proj\2015\257-02 (Design - South Park Loop Pathway Connector)\Drawings\Layout Drawings\P&P PATHWAY CL 7-9.dwg STA 43+60.00 - 49+20.00 - May 13 2016 @ 2:50 pm PLOTTED BY kurichner DWG FORMAT: 19.1

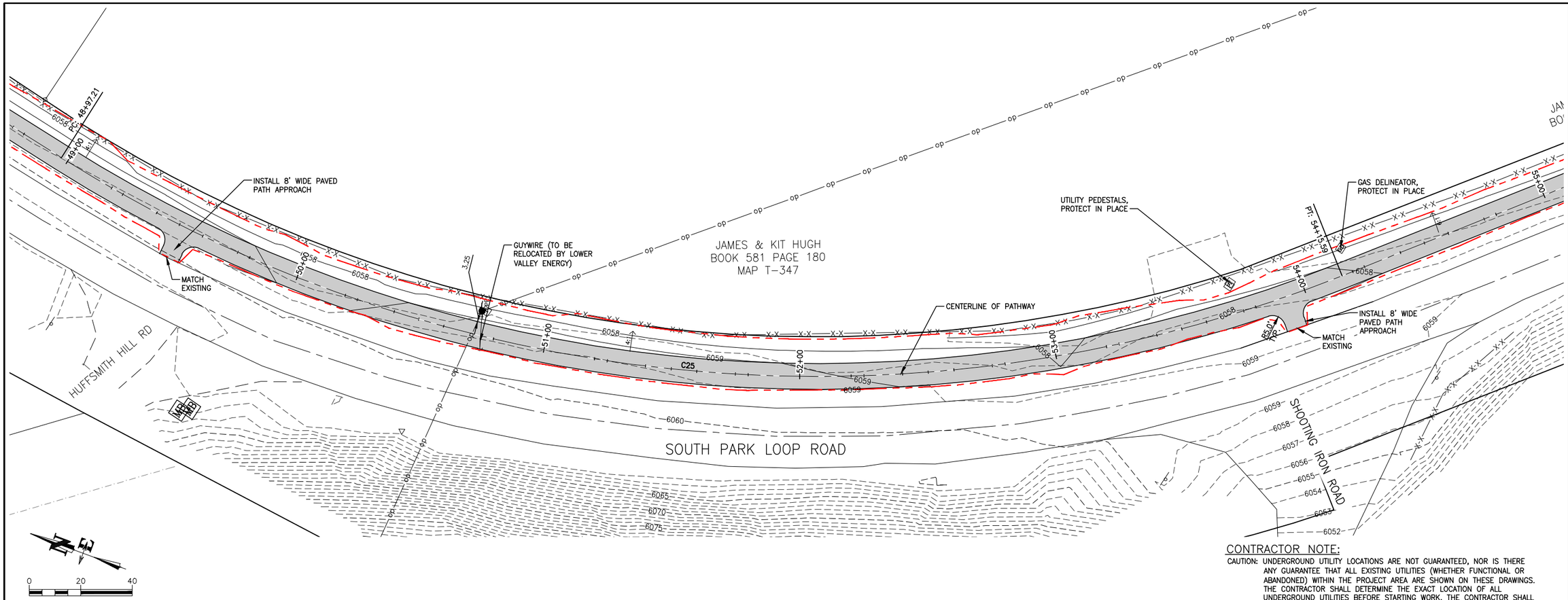

CONTRACTOR NOTE:

CAUTION: UNDERGROUND UTILITY LOCATIONS ARE NOT GUARANTEED, NOR IS THERE ANY GUARANTEE THAT ALL EXISTING UTILITIES (WHETHER FUNCTIONAL OR ABANDONED) WITHIN THE PROJECT AREA ARE SHOWN ON THESE DRAWINGS. THE CONTRACTOR SHALL DETERMINE THE EXACT LOCATION OF ALL UNDERGROUND UTILITIES BEFORE STARTING WORK. THE CONTRACTOR SHALL BE RESPONSIBLE FOR ALL DAMAGE RESULTING FROM CONTRACTORS WORK.

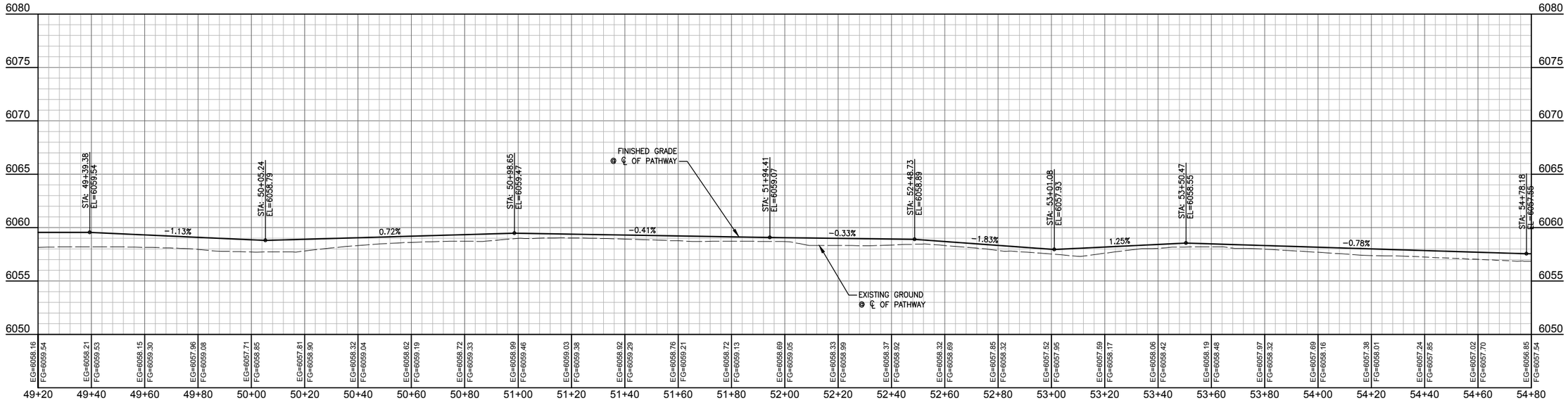

REV.	5/13/2016
DATE	
SURVEYED	NE
ENGINEERED	DD
DRAWN	DB
CHECKED	DD
APPROVED	DD

NELSON ENGINEERING
P.O. BOX 1599, JACKSON WYOMING (307) 733-2087

DRAWING TITLE
PATHWAY ALIGNMENT
PLAN & PROFILE
STA. 49+20.00 - 54+80.00

JOB TITLE
SOUTH PARK LOOP
CONNECTOR PATHWAY PROJECT
TETON COUNTY, WY

DRAWING NO 3.9

JOB NO 15-257-02

S:\Proj\2015\257-02 \Design - South Park Loop Pathway Connector\Drawings\Layout Drawings\PKP PATHWAY CL 18-12.dwg <STA 49+20.00 - 54+80.00> May 15 2016 01:08:51 pm PLOTTED BY: kwrichmond DWG FORMAT: 151

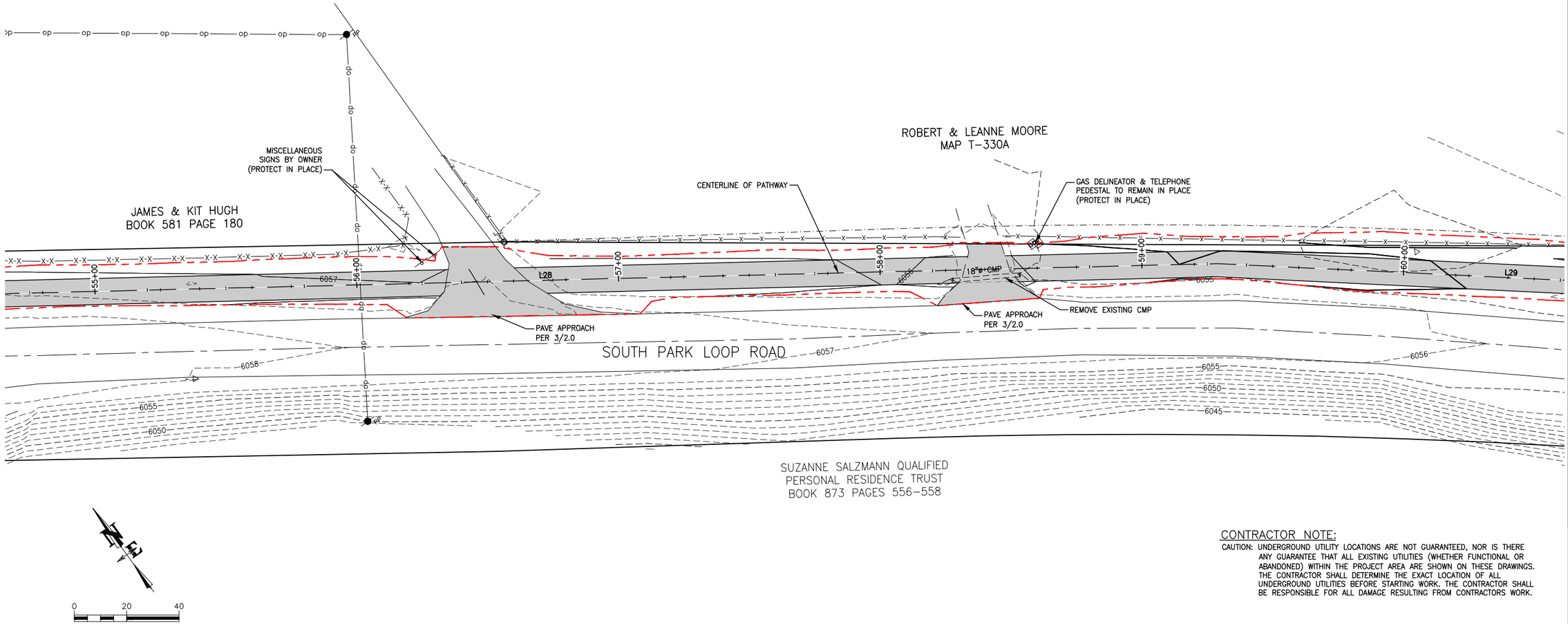

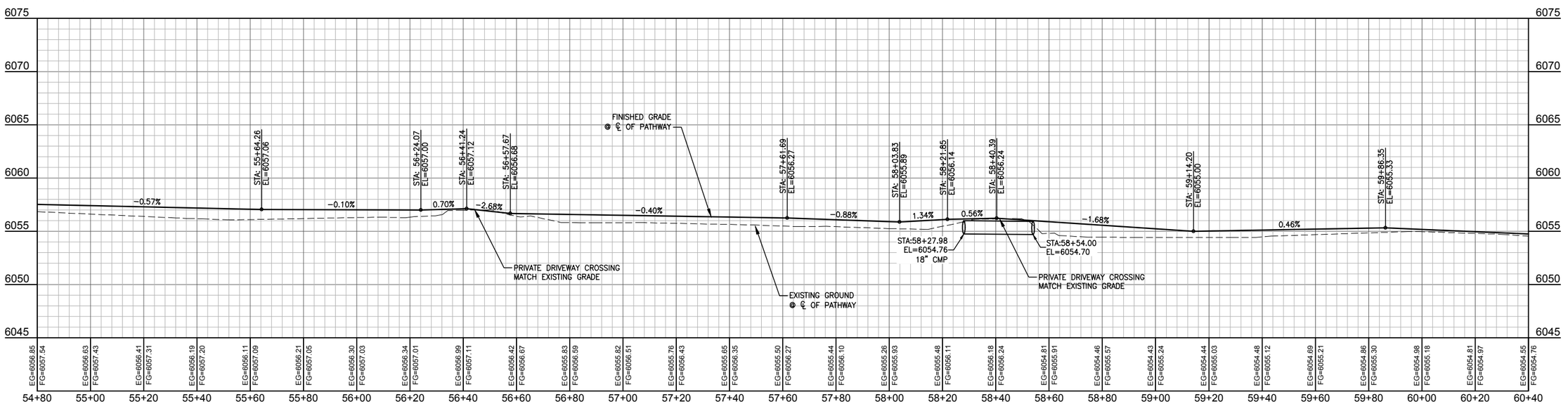

CONTRACTOR NOTE:

CAUTION: UNDERGROUND UTILITY LOCATIONS ARE NOT GUARANTEED, NOR IS THERE ANY GUARANTEE THAT ALL EXISTING UTILITIES (WHETHER FUNCTIONAL OR ABANDONED) WITHIN THE PROJECT AREA ARE SHOWN ON THESE DRAWINGS. THE CONTRACTOR SHALL DETERMINE THE EXACT LOCATION OF ALL UNDERGROUND UTILITIES BEFORE STARTING WORK. THE CONTRACTOR SHALL BE RESPONSIBLE FOR ALL DAMAGE RESULTING FROM CONTRACTORS WORK.

	DATE	5/13/2016	REV.
	SURVEYED	NE	
	ENGINEERED	DD	
	DRAWN	DB	
	CHECKED	DD	
	APPROVED	DD	

NELSON ENGINEERING
P.O. BOX 1599, JACKSON WYOMING (307) 733-2087

DRAWING TITLE
PATHWAY ALIGNMENT
PLAN & PROFILE
STA. 54+80.00 - 60+40.00

JOB TITLE
SOUTH PARK LOOP
CONNECTOR PATHWAY PROJECT
TETON COUNTY, WY

DRAWING NO 3.10

JOB NO 15-257-02

S:\Proj\2015\257-02 Design - South Park Loop Pathway Connector\1Drawings\Layout Drawings\PAP PATHWAY CL 18-22.dwg STA. 54+80.00 - 60+40.00 - May 15 2016, 03:29:20 pm PLOTTED BY: kurschner DWG FORMAT: 191

PLANT MOUNTAIN MAPLE TREES (3 EA.)

REST AREA (SEE DETAIL, SHEET 2.1)

GAS DELINEATOR (REMOVE & RESET) COORDINATE WITH LOWER VALLEY ENERGY

RONALD HANDO
BOOK 110 PAGES 110

DAVID KHOURY
BOOK 898 PAGES 147–149

FIELD VERIFY FENCE LOCATION. INSTALL PATH NORTH EDGE TO BE 4 FT. MIN FROM FENCE

CENTERLINE OF PATHWAY

PC: 62+49.17

L29 L30 C26

SOUTH PARK LOOP ROAD

STEVE & SUSAN TIPLER
BOOK 688 PAGES 994–996

RODERICK & JOYCE LUCAS
FAMILY TRUST
PARCEL A
MAP T362B
BOOK 507 PAGE 683

0 20 40

CONTRACTOR NOTE:

CAUTION: UNDERGROUND UTILITY LOCATIONS ARE NOT GUARANTEED, NOR IS THERE ANY GUARANTEE THAT ALL EXISTING UTILITIES (WHETHER FUNCTIONAL OR ABANDONED) WITHIN THE PROJECT AREA ARE SHOWN ON THESE DRAWINGS. THE CONTRACTOR SHALL DETERMINE THE EXACT LOCATION OF ALL UNDERGROUND UTILITIES BEFORE STARTING WORK. THE CONTRACTOR SHALL BE RESPONSIBLE FOR ALL DAMAGE RESULTING FROM CONTRACTORS WORK.

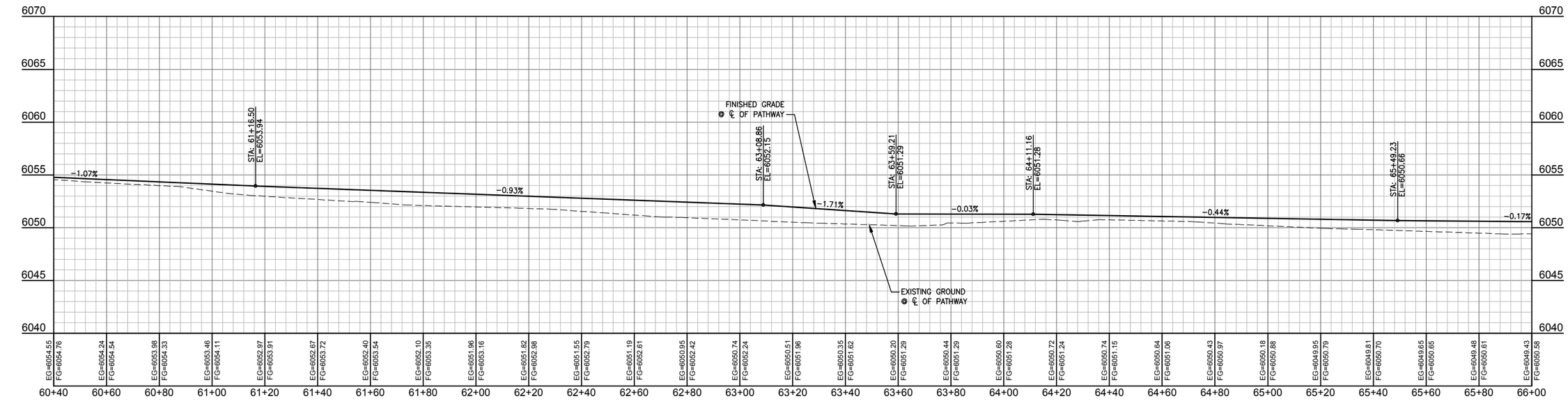

REV.	DATE	BY
	5/13/2016	NE
	SURVEYED	DD
	ENGINEERED	DB
	DRAWN	DD
	CHECKED	DD
	APPROVED	DD

NELSON ENGINEERING
P.O. BOX 1599, JACKSON WYOMING (307) 733-2087

DRAWING TITLE
PATHWAY ALIGNMENT
PLAN & PROFILE
STA. 60+40.00 - 66+00.00

JOB TITLE
SOUTH PARK LOOP
CONNECTOR PATHWAY PROJECT
TETON COUNTY, WY

DRAWING NO 3.11

JOB NO 15-257-02

S:\Proj\2015\257-02 (Design - South Park Loop Pathway Connector)\Drawings\Layout Drawings\P&P PATHWAY CL (0-12).dwg CSTA 60+40.00 - 66+00.00 - May 16 2016 - 12:37:56 pm PLOTTED BY: kwirtzner DWG FORMAT: 151

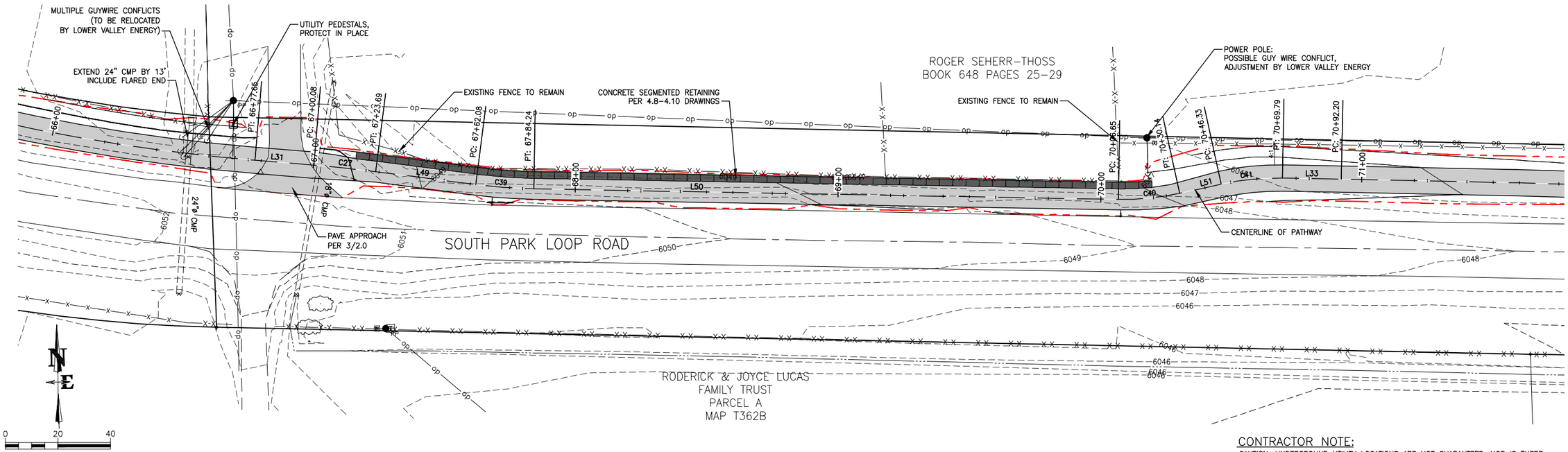

CONTRACTOR NOTE:

CAUTION: UNDERGROUND UTILITY LOCATIONS ARE NOT GUARANTEED, NOR IS THERE ANY GUARANTEE THAT ALL EXISTING UTILITIES (WHETHER FUNCTIONAL OR ABANDONED) WITHIN THE PROJECT AREA ARE SHOWN ON THESE DRAWINGS. THE CONTRACTOR SHALL DETERMINE THE EXACT LOCATION OF ALL UNDERGROUND UTILITIES BEFORE STARTING WORK. THE CONTRACTOR SHALL BE RESPONSIBLE FOR ALL DAMAGE RESULTING FROM CONTRACTORS WORK.

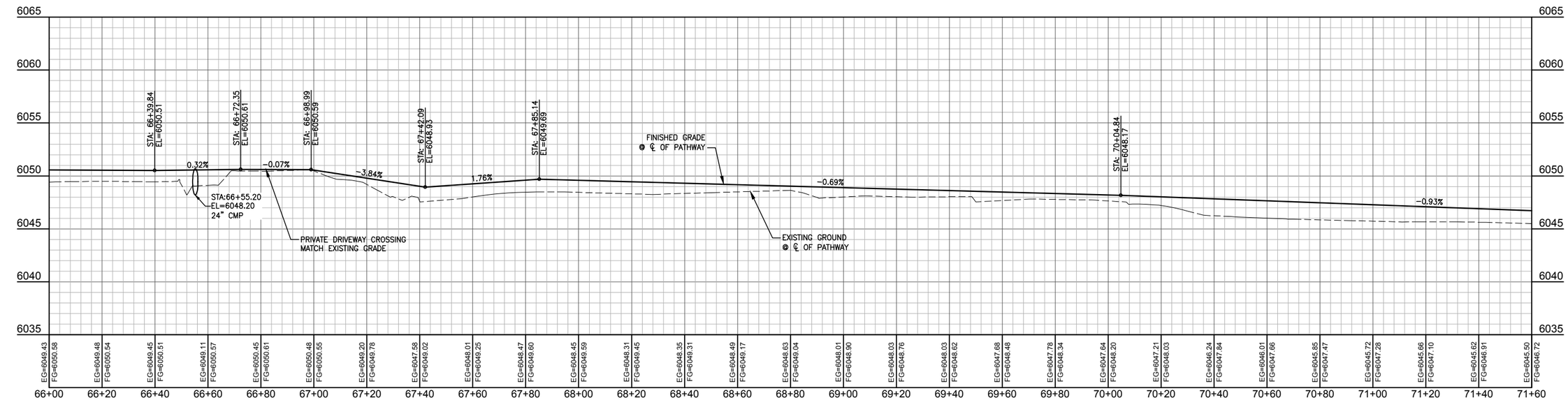

DATE	5/13/2016	REV.
SURVEYED	NE	
ENGINEERED	DD	
DRAWN	DB	
CHECKED	DD	
APPROVED	DD	

NELSON ENGINEERING
P.O. BOX 1599, JACKSON WYOMING (307) 733-2087

DRAWING TITLE
PATHWAY ALIGNMENT
PLAN & PROFILE
STA. 66+00.00 - 71+60.00

JOB TITLE
SOUTH PARK LOOP
CONNECTOR PATHWAY PROJECT
TETON COUNTY, WY

DRAWING NO 3.12

JOB NO 15-257-02

S:\Proj\2015\257-02 Design - South Park Loop Pathway Connector\Drawings\Layout Drawings\PAP PATHWAY CL 13-15.dwg CSTA 66+00.00 - 71+60.00 - May 15 2016 01:39:54 pm PLOTTED BY: kwirkner 3VG FORMAT: 15:1

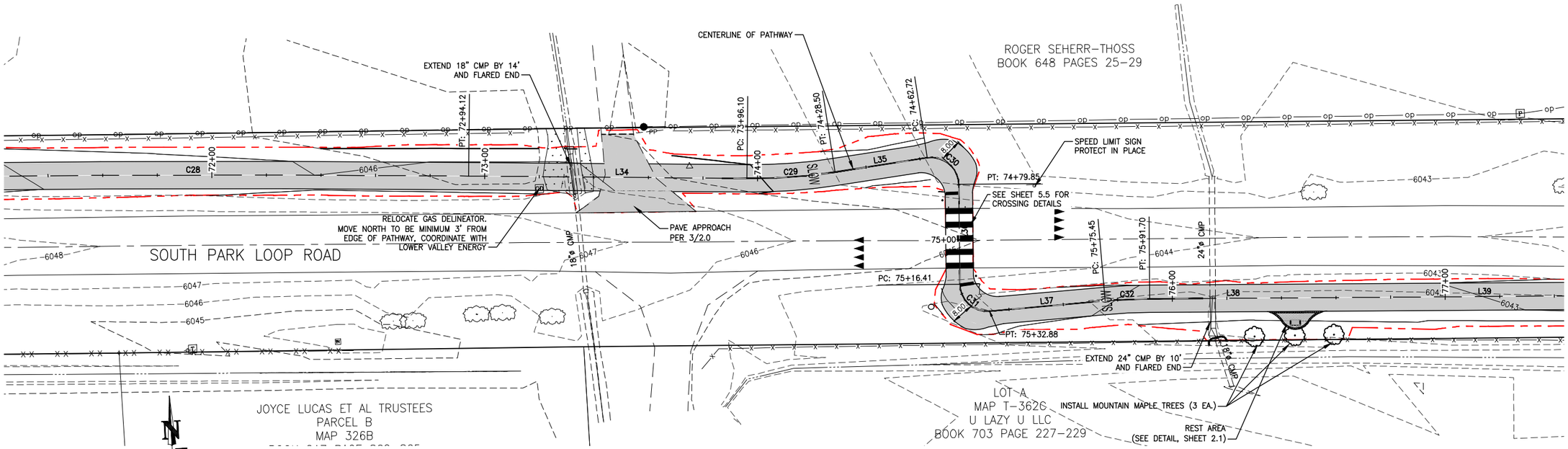

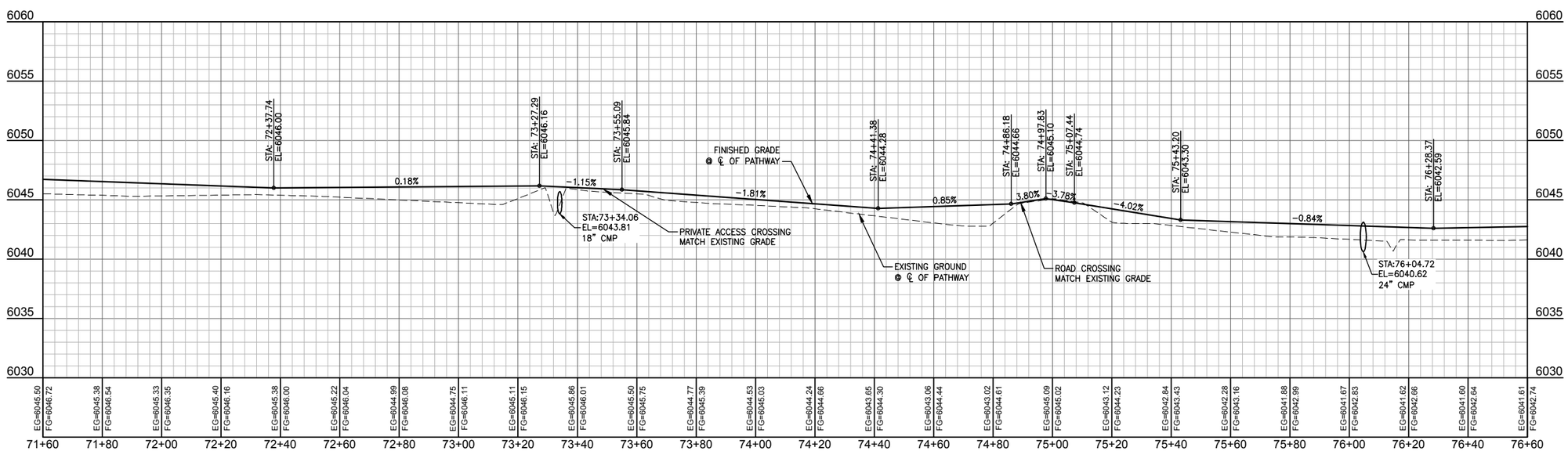

CONTRACTOR NOTE:

CAUTION: UNDERGROUND UTILITY LOCATIONS ARE NOT GUARANTEED, NOR IS THERE ANY GUARANTEE THAT ALL EXISTING UTILITIES (WHETHER FUNCTIONAL OR ABANDONED) WITHIN THE PROJECT AREA ARE SHOWN ON THESE DRAWINGS. THE CONTRACTOR SHALL DETERMINE THE EXACT LOCATION OF ALL UNDERGROUND UTILITIES BEFORE STARTING WORK. THE CONTRACTOR SHALL BE RESPONSIBLE FOR ALL DAMAGE RESULTING FROM CONTRACTORS WORK.

		REV.
DATE	5/13/2016	
SURVEYED	NE	
ENGINEERED	DD	
DRAWN	DB	
CHECKED	DD	
APPROVED	DD	

NELSON ENGINEERING
P.O. BOX 1599, JACKSON WYOMING (307) 733-2087

DRAWING TITLE
PATHWAY ALIGNMENT
PLAN & PROFILE
STA. 71+60.00 - 76+60.00

JOB TITLE
SOUTH PARK LOOP
CONNECTOR PATHWAY PROJECT
TETON COUNTY, WY

DRAWING NO 3.13

JOB NO 15-257-02

S:\Proj\2015\257-02 (Design - South Park Loop Pathway Connector)\Drawings\Layout Drawings\PRP PATHWAY CL 13-15.dwg STA. 71+60.00 - 76+60.00 - May 16 2016 12:15:47 pm PLOTTED BY karchner DWG FORMAT: 151

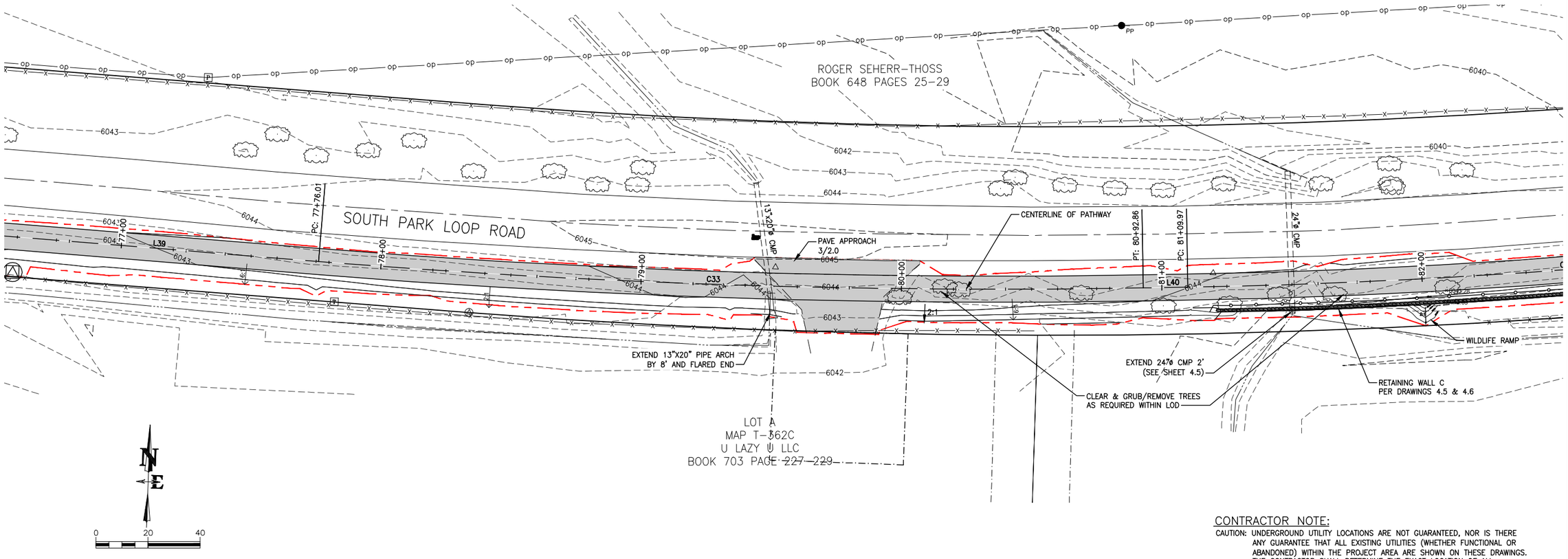

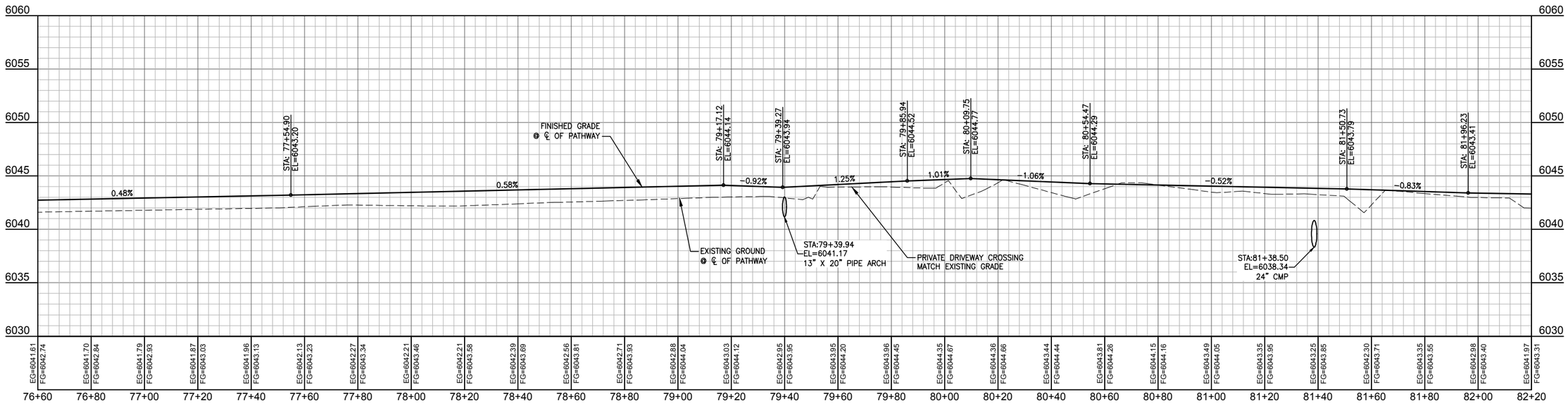

CONTRACTOR NOTE:

CAUTION: UNDERGROUND UTILITY LOCATIONS ARE NOT GUARANTEED, NOR IS THERE ANY GUARANTEE THAT ALL EXISTING UTILITIES (WHETHER FUNCTIONAL OR ABANDONED) WITHIN THE PROJECT AREA ARE SHOWN ON THESE DRAWINGS. THE CONTRACTOR SHALL DETERMINE THE EXACT LOCATION OF ALL UNDERGROUND UTILITIES BEFORE STARTING WORK. THE CONTRACTOR SHALL BE RESPONSIBLE FOR ALL DAMAGE RESULTING FROM CONTRACTORS WORK.

DATE	5/13/2016	REV.
SURVEYED	NE	
ENGINEERED	DD	
DRAWN	DB	
CHECKED	DD	
APPROVED	DD	

NELSON ENGINEERING
P.O. BOX 1599, JACKSON WYOMING (307) 733-2087

DRAWING TITLE
PATHWAY ALIGNMENT
PLAN & PROFILE
STA. 76+60.00 - 82+20.00

JOB TITLE
SOUTH PARK LOOP
CONNECTOR PATHWAY PROJECT
TETON COUNTY, WY

DRAWING NO 3.14

JOB NO 15-257-02

S:\Proj2015\257-02 Design - South Park Loop Pathway Connector\Drawings\Layout Drawings\P&P PATHWAY CL 13-15deg STA 76+60.00 - 82+20.00 - May 15 2016 01:31:44 pm PLOTTED BY: kwirkner DWG FORMAT: 151

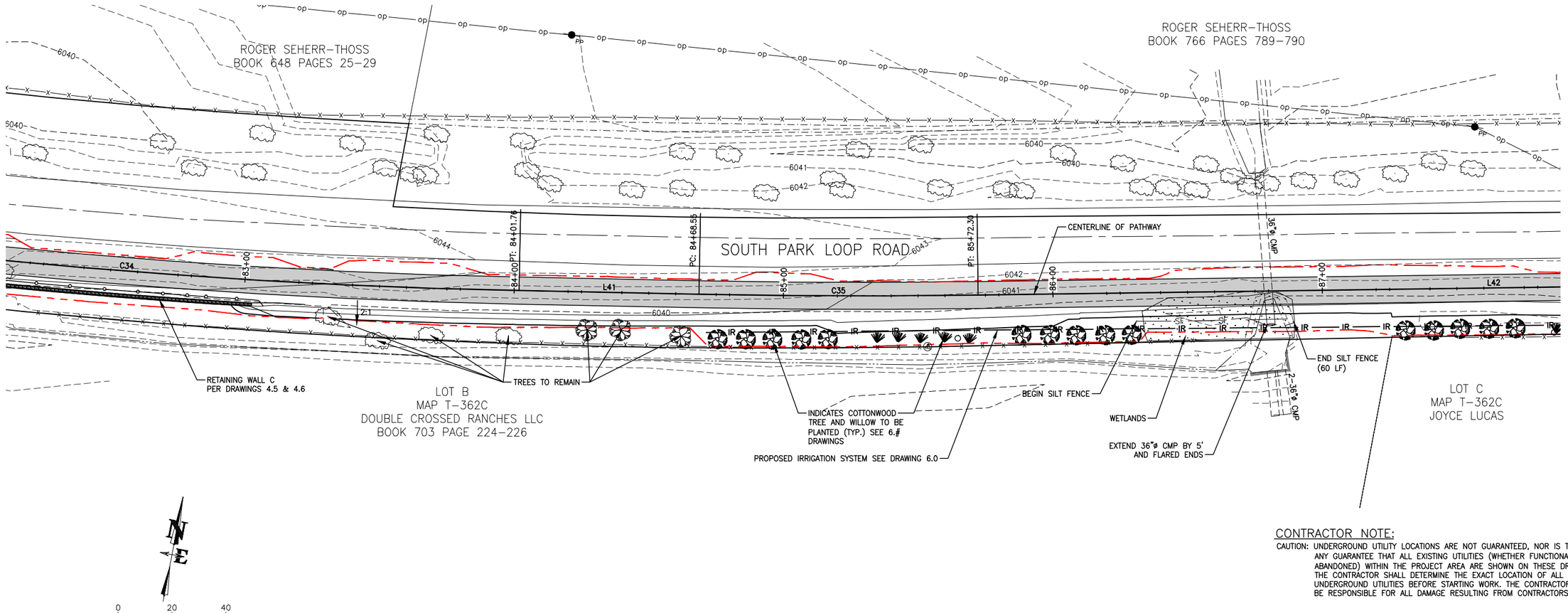

CONTRACTOR NOTE:

CAUTION: UNDERGROUND UTILITY LOCATIONS ARE NOT GUARANTEED, NOR IS THERE ANY GUARANTEE THAT ALL EXISTING UTILITIES (WHETHER FUNCTIONAL OR ABANDONED) WITHIN THE PROJECT AREA ARE SHOWN ON THESE DRAWINGS. THE CONTRACTOR SHALL DETERMINE THE EXACT LOCATION OF ALL UNDERGROUND UTILITIES BEFORE STARTING WORK. THE CONTRACTOR SHALL BE RESPONSIBLE FOR ALL DAMAGE RESULTING FROM CONTRACTORS WORK.

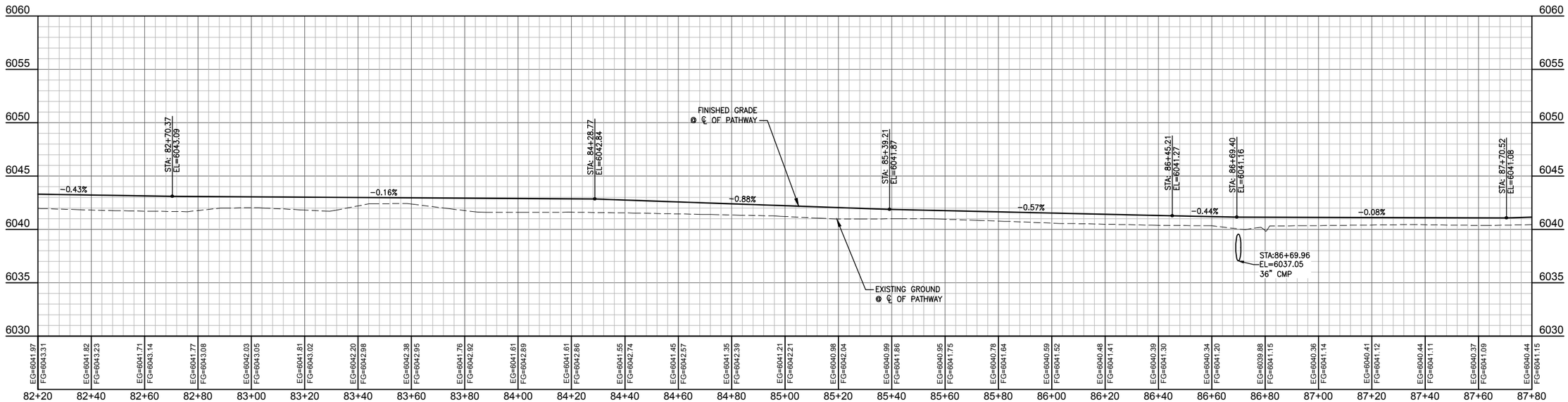

DATE	5/13/2016	REV.
SURVEYED	NE	
ENGINEERED	DD	
DRAWN	DB	
CHECKED	DD	
APPROVED	DD	

NELSON ENGINEERING
P.O. BOX 1599, JACKSON WYOMING (307) 733-2087

DRAWING TITLE
PATHWAY ALIGNMENT
PLAN & PROFILE
STA. 82+20.00 - 87+80.00

JOB TITLE
SOUTH PARK LOOP
CONNECTOR PATHWAY PROJECT
TETON COUNTY, WY

DRAWING NO 3.15

JOB NO 15-257-02

S:\Proj\2015\257-02 Design - South Park Loop Pathway Connector\Drawings\Layout Drawings\P&P PATHWAY CL 15-18.dwg, C3.5 STA 82+20.00 - 87+80.00 - May 16 2016 - 12:41:23 pm PLOTTED BY: kwirshner DWG FORMAT: 151

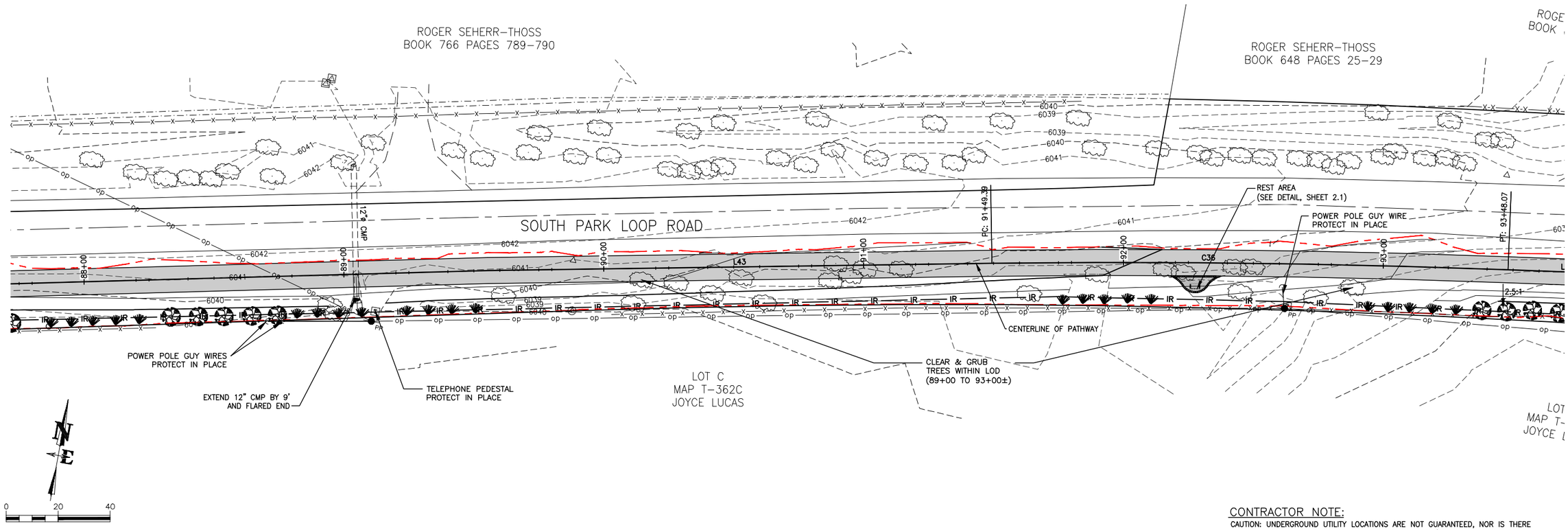

CONTRACTOR NOTE:

CAUTION: UNDERGROUND UTILITY LOCATIONS ARE NOT GUARANTEED, NOR IS THERE ANY GUARANTEE THAT ALL EXISTING UTILITIES (WHETHER FUNCTIONAL OR ABANDONED) WITHIN THE PROJECT AREA ARE SHOWN ON THESE DRAWINGS. THE CONTRACTOR SHALL DETERMINE THE EXACT LOCATION OF ALL UNDERGROUND UTILITIES BEFORE STARTING WORK. THE CONTRACTOR SHALL BE RESPONSIBLE FOR ALL DAMAGE RESULTING FROM CONTRACTORS WORK.

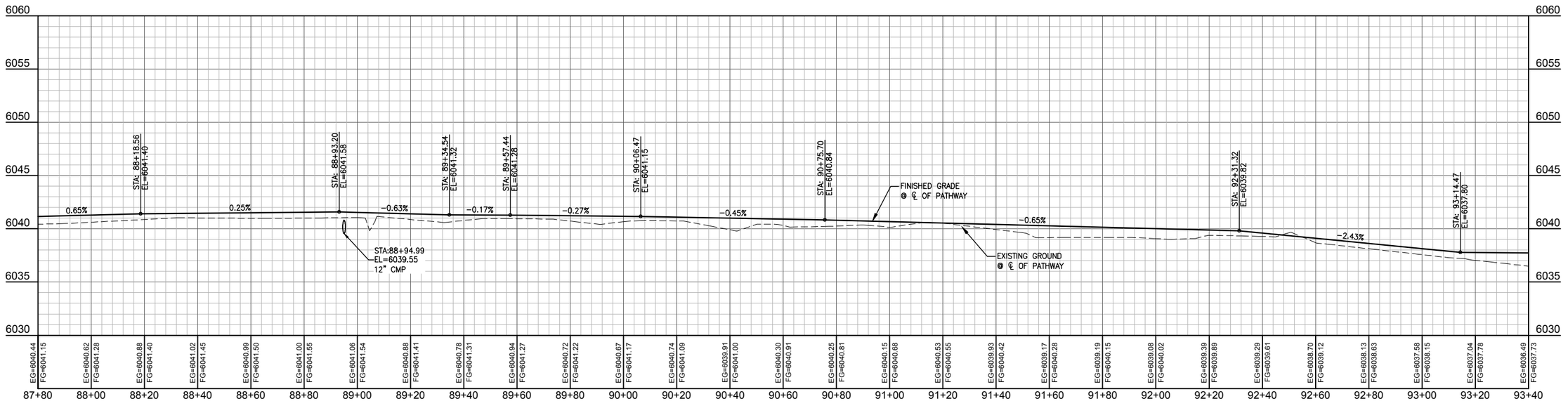

REV.		
	DATE	5/13/2016
	SURVEYED	NE
	ENGINEERED	DD
	DRAWN	DB
	CHECKED	DD
	APPROVED	DD

NELSON ENGINEERING
P.O. BOX 1599, JACKSON WYOMING (307) 733-2087

DRAWING TITLE
PATHWAY ALIGNMENT
PLAN & PROFILE
STA. 87+80.00 - 93+40.00

JOB TITLE
SOUTH PARK LOOP
CONNECTOR PATHWAY PROJECT
TETON COUNTY, WY

DRAWING NO 3.16

JOB NO 15-257-02

S:\Proj2015\257-02 (Design - South Park Loop Pathway Connector)\Drawings\Layout Drawings\P&P PATHWAY CL 15-18.dwg C3.16 STA. 87+80.00 - 93+40.00 - May 16 2016 12:43:00 pm PLOTTED BY: karichner DWG FORMAT: 19.1

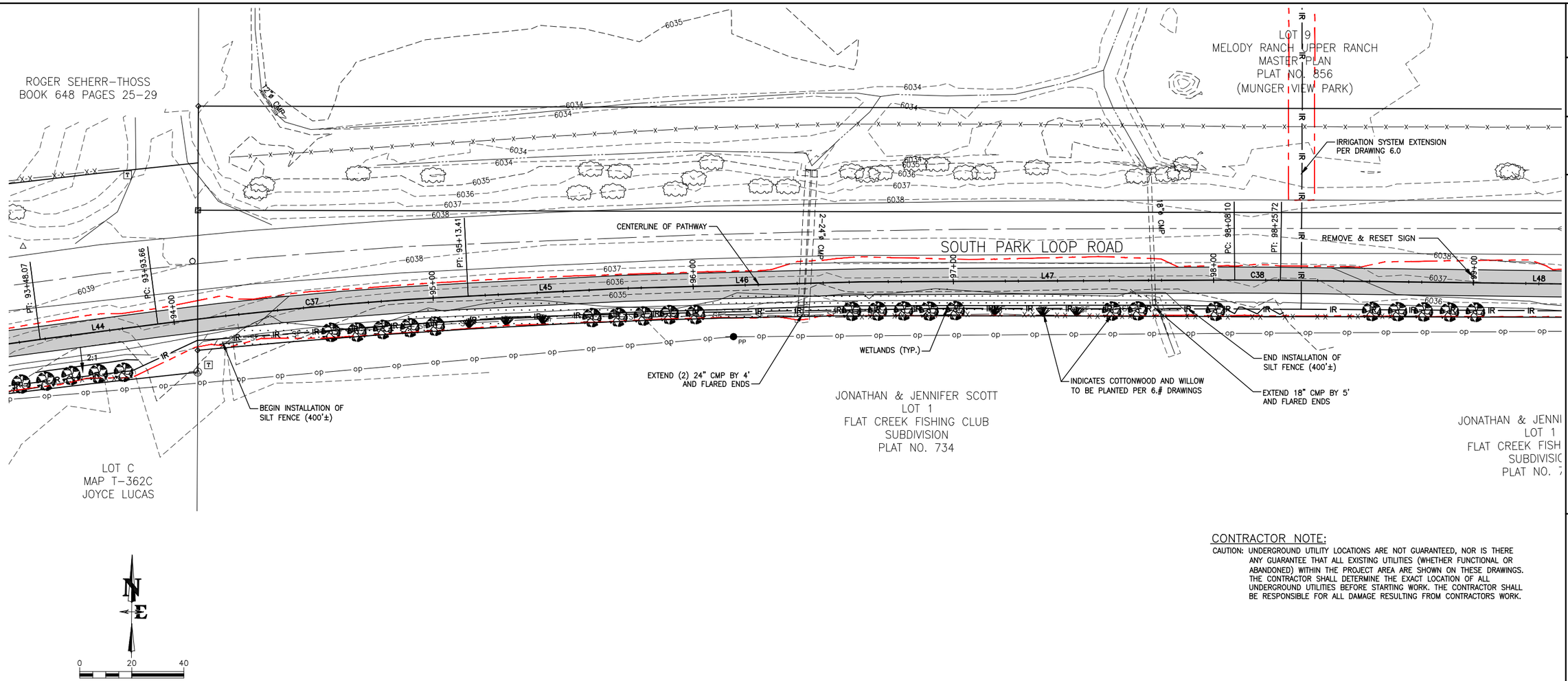

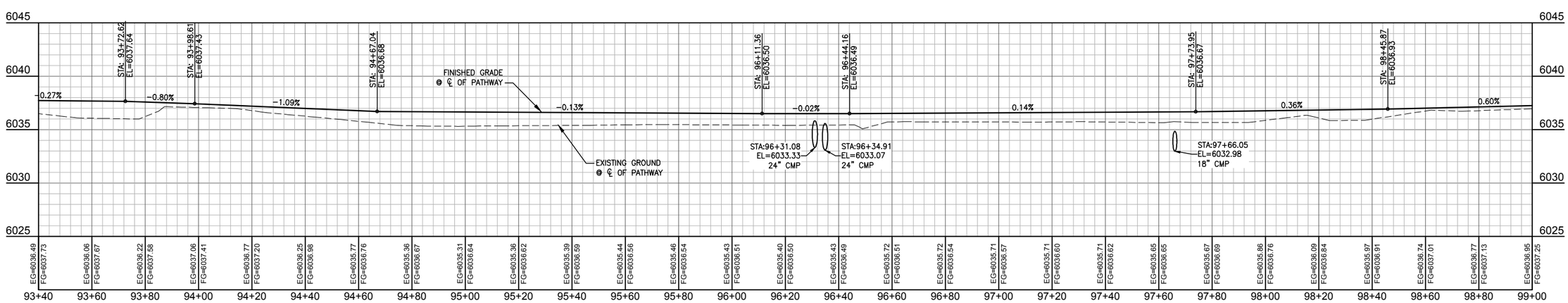

CONTRACTOR NOTE:

CAUTION: UNDERGROUND UTILITY LOCATIONS ARE NOT GUARANTEED, NOR IS THERE ANY GUARANTEE THAT ALL EXISTING UTILITIES (WHETHER FUNCTIONAL OR ABANDONED) WITHIN THE PROJECT AREA ARE SHOWN ON THESE DRAWINGS. THE CONTRACTOR SHALL DETERMINE THE EXACT LOCATION OF ALL UNDERGROUND UTILITIES BEFORE STARTING WORK. THE CONTRACTOR SHALL BE RESPONSIBLE FOR ALL DAMAGE RESULTING FROM CONTRACTORS WORK.

	REV.
DATE	5/13/2016
SURVEYED	NE
ENGINEERED	DD
DRAWN	DB
CHECKED	DD
APPROVED	DD

NELSON ENGINEERING
P.O. BOX 1599, JACKSON WYOMING (307) 733-2087

DRAWING TITLE
PATHWAY ALIGNMENT
PLAN & PROFILE
STA. 93+40.00 - 99+00.00

JOB TITLE
SOUTH PARK LOOP
CONNECTOR PATHWAY PROJECT
TETON COUNTY, WY

DRAWING NO 3.17

JOB NO 15-257-02

S:\Proj\2015\257-02 Design - South Park Loop Pathway Connector\Drawings\Layout Drawings\PKP PATHWAY CL 15-18.dwg C3.17 STA 93+40.00 - 99+00.00 - May 16 2016 12:43:49 pm PLOTTED BY: kwirkner DWG FORMAT: 151

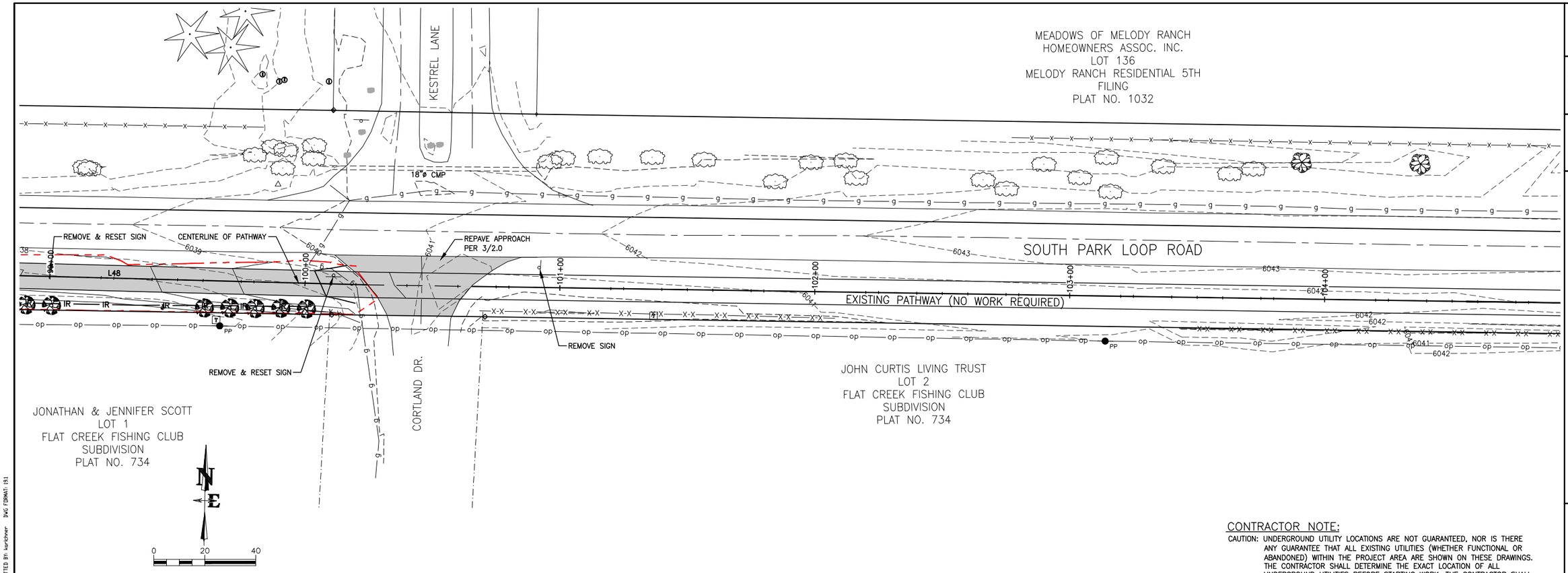

CONTRACTOR NOTE:

CAUTION: UNDERGROUND UTILITY LOCATIONS ARE NOT GUARANTEED, NOR IS THERE ANY GUARANTEE THAT ALL EXISTING UTILITIES (WHETHER FUNCTIONAL OR ABANDONED) WITHIN THE PROJECT AREA ARE SHOWN ON THESE DRAWINGS. THE CONTRACTOR SHALL DETERMINE THE EXACT LOCATION OF ALL UNDERGROUND UTILITIES BEFORE STARTING WORK. THE CONTRACTOR SHALL BE RESPONSIBLE FOR ALL DAMAGE RESULTING FROM CONTRACTORS WORK.

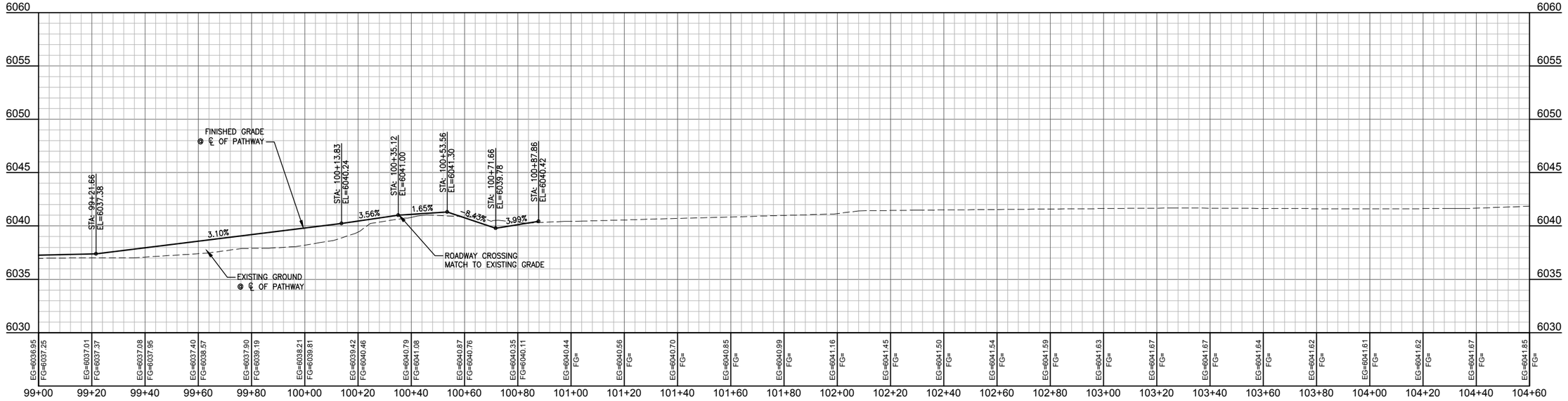

PATHWAY CL PROFILE
SCALE: (H) 1" = 10' (V) 1" = 2'
START STA: 99+00.00, END STA: 104+60.00

DATE	5/13/2016	REV.
SURVEYED	NE	
ENGINEERED	DD	
DRAWN	DB	
CHECKED	DD	
APPROVED	DD	

NELSON ENGINEERING
P.O. BOX 1599, JACKSON WYOMING (307) 733-2087

DRAWING TITLE
PATHWAY ALIGNMENT
PLAN & PROFILE
STA. 99+00.00 - 104+60.00

JOB TITLE
SOUTH PARK LOOP
CONNECTOR PATHWAY PROJECT
TETON COUNTY, WY

DRAWING NO 3.18

JOB NO 15-257-02

S:\Proj2015\257-02 (Design - South Park Loop Pathway Connector)\Drawings\Layout Drawings\P&P PATHWAY CL 15-18.dwg (3.18 STA. 99+00.00 - 104+60.00) - May 16 2016 12:44:18 pm PLOTTED BY: kurichner DWG FORMAT: 19.1

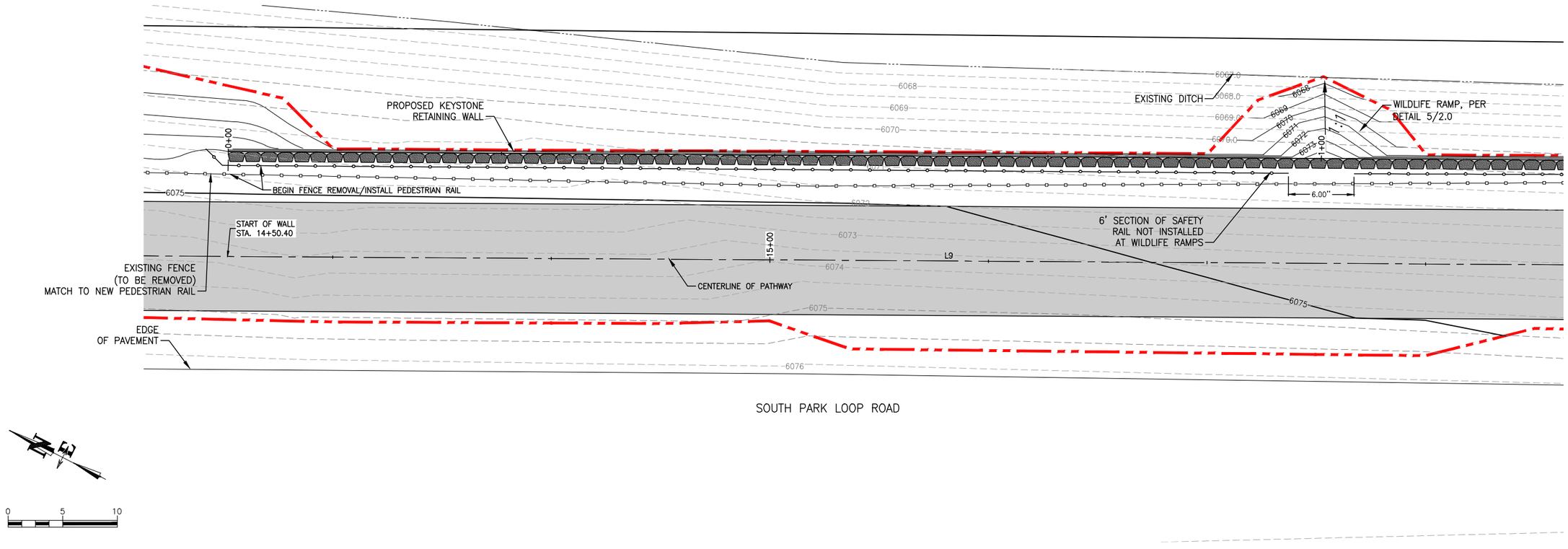

SOUTH PARK LOOP ROAD

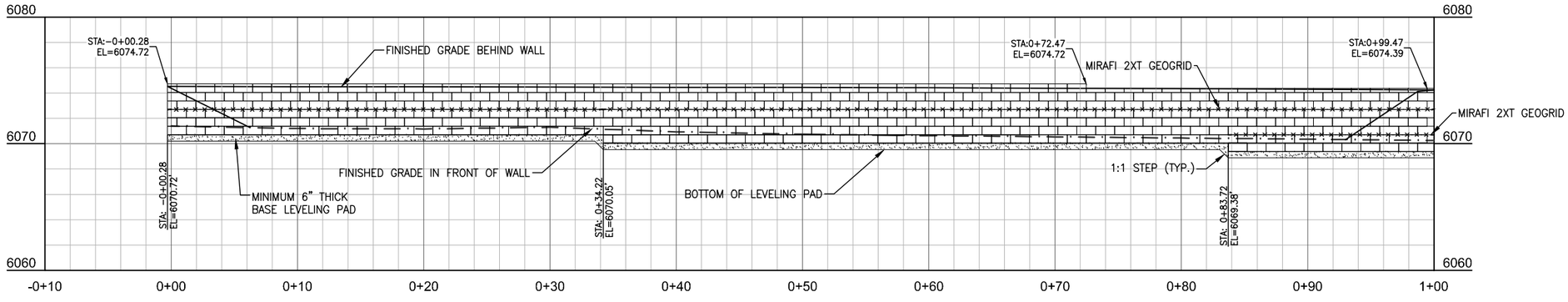

RETAINING WALL A (STA 0+00 – 1+00)

GENERAL NOTES:
1. USE KEYSTONE COMPAC BLOCK UNITS. CAP UNITS CAN BE COMPAC FULL OR HALF HEIGHT BLOCKS.
2. LAYOUT WALLS PER THE CIVIL DRAWINGS CONSIDERING A WALL FACE BATTER OF 1(H) TO 8(V).
3. STEP LOCATIONS SHALL NOT VARY MORE THAN 2 BLOCKS TO MATCH GRADES IN THE FIELD.
4. MINIMUM WALL EMBEDMENT SHALL BE NO LESS THAN 0.5 FEET WITH A LEVEL SLOPE IN FRONT OF WALLS.
5. GEOGRID LENGTH SHALL BE A MINIMUM OF 4-FT, MEASURED FROM THE FRONT OF WALL FACE, UNLESS OTHERWISE NOTED ON PROFILE IN SQUARE ON GRID LAYER. THE SQUARE INDICATES THE LENGTH AND DIRECTION ALONG THE PROFILE THE GRID LENGTH WILL CHANGE.

GEOGRID KEY:

MIRAFI 2XT GEOGRID –×·×·×·×·×·×·×·×–

GEOGRID LENGTH FOR THIS LAYER ONLY 4.5 FT

DATE	5/13/2016
SURVEYED	NE
ENGINEERED	DD
DRAWN	DB
CHECKED	DD
APPROVED	DD

REV.

NELSON ENGINEERING
P.O. BOX 1599, JACKSON WYOMING (307) 733-2087

DRAWING TITLE
RETAINING WALL A
PLAN AND PROFILE
STA 0+00 TO 1+00

JOB TITLE
SOUTH PARK LOOP
CONNECTOR PATHWAY PROJECT
TETON COUNTY, WY

DRAWING NO 4.0

JOB NO 15-257-02

S:\Proj2015\257-02 (Design - South Park Loop Pathway Connector)\Drawings\RETAINING WALL.dwg <RETAINING WALL A> - May 15 2016 01:05:19 pm PLOTTED BY: karichner DWG FORMAT: 19.1

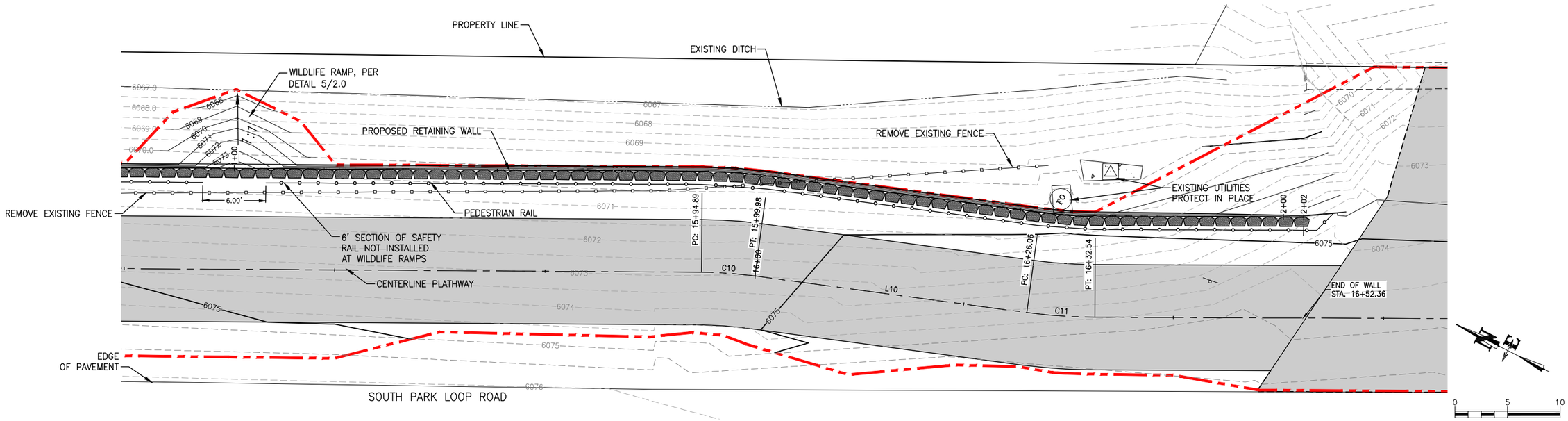

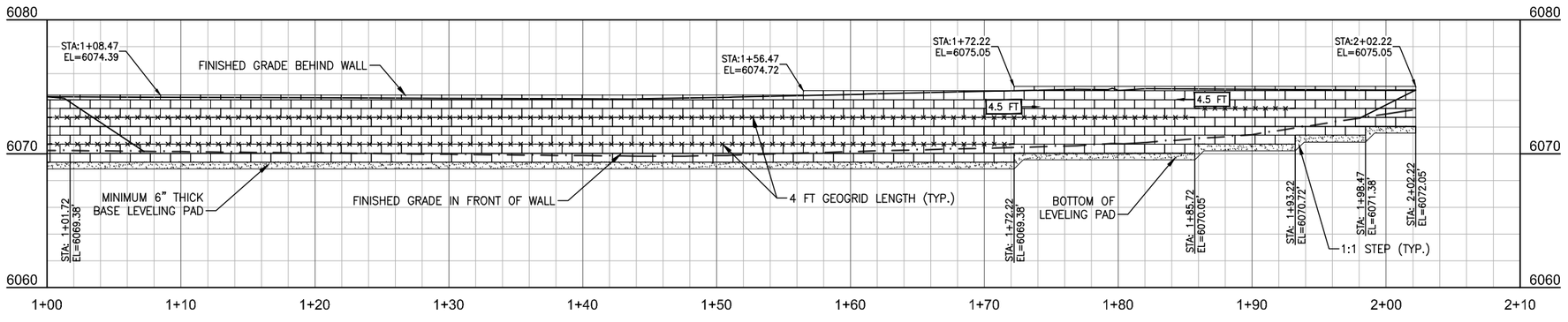

RETAINING WALL A (STA 1+00 – 2+02)

GENERAL NOTES:
1. USE KEYSTONE COMPAC BLOCK UNITS. CAP UNITS CAN BE COMPAC FULL OR HALF HEIGHT BLOCKS.
2. LAYOUT WALLS PER THE CIVIL DRAWINGS CONSIDERING A WALL FACE BATTER OF 1(H) TO 8(V).
3. STEP LOCATIONS SHALL NOT VARY MORE THAN 2 BLOCKS TO MATCH GRADES IN THE FIELD.
4. MINIMUM WALL EMBEDMENT SHALL BE NO LESS THAN 0.5 FEET WITH A LEVEL SLOPE IN FRONT OF WALLS.
5. GEOGRID LENGTH SHALL BE A MINIMUM OF 4-FT, MEASURED FROM THE FRONT OF WALL FACE, UNLESS OTHERWISE NOTED ON PROFILE IN SQUARE ON GRID LAYER. THE SQUARE INDICATES THE LENGTH AND DIRECTION ALONG THE PROFILE THE GRID LENGTH WILL CHANGE.

GEOGRID KEY:

MIRAFI 2XT GEOGRID –×·×·×·×·×·×·×·×–

GEOGRID LENGTH FOR THIS LAYER ONLY 4.5 FT →

DATE	5/13/2016	REV.
SURVEYED	NE	
ENGINEERED	DD	
DRAWN	DB	
CHECKED	DD	
APPROVED	DD	

NELSON ENGINEERING
P.O. BOX 1599, JACKSON WYOMING (307) 733-2087

DRAWING TITLE
RETAINING WALL A
PLAN AND PROFILE
STATION 1+00 TO 2+02

JOB TITLE
SOUTH PARK LOOP
CONNECTOR PATHWAY PROJECT
TETON COUNTY, WY

DRAWING NO 4.1

JOB NO 15-257-02

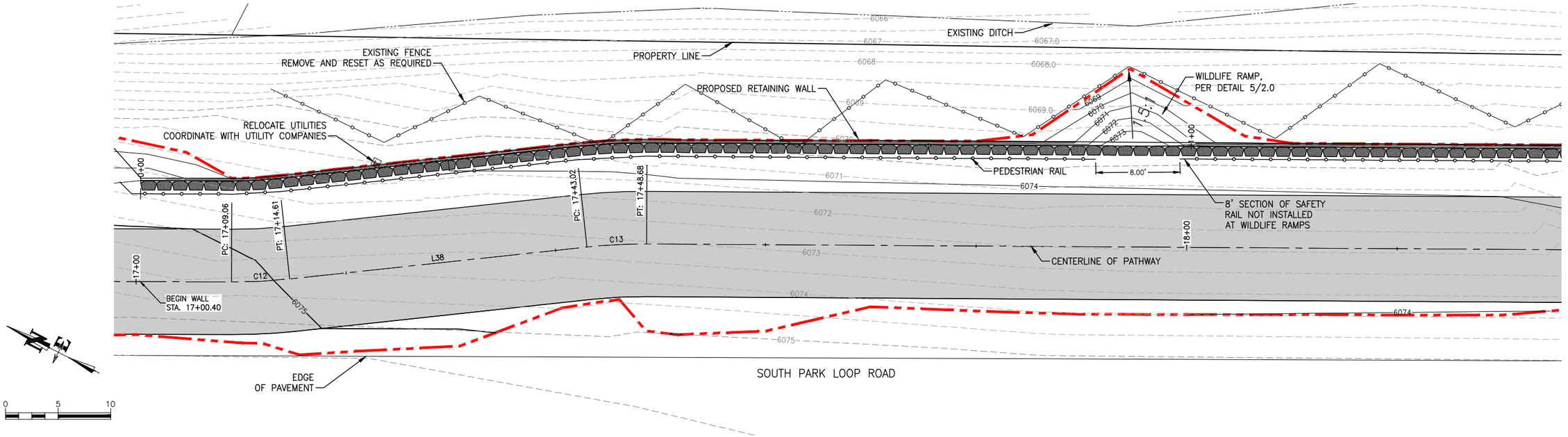

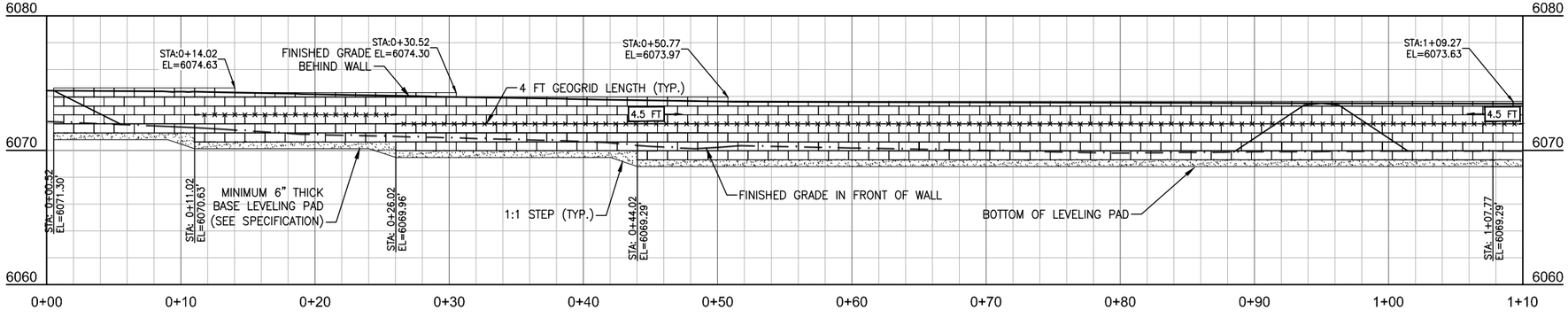

RETAINING WALL B (STA 0+00 – 1+10)

GENERAL NOTES:
1. USE KEYSTONE COMPAC BLOCK UNITS. CAP UNITS CAN BE COMPAC FULL OR HALF HEIGHT BLOCKS.
2. LAYOUT WALLS PER THE CIVIL DRAWINGS CONSIDERING A WALL FACE BATTER OF 1(H) TO 8(V).
3. STEP LOCATIONS SHALL NOT VARY MORE THAN 2 BLOCKS TO MATCH GRADES IN THE FIELD.
4. MINIMUM WALL EMBEDMENT SHALL BE NO LESS THAN 0.5 FEET WITH A LEVEL SLOPE IN FRONT OF WALLS.
5. GEOGRID LENGTH SHALL BE A MINIMUM OF 4–FT, MEASURED FROM THE FRONT OF WALL FACE, UNLESS OTHERWISE NOTED ON PROFILE IN SQUARE ON GRID LAYER. THE SQUARE INDICATES THE LENGTH AND DIRECTION ALONG THE PROFILE THE GRID LENGTH WILL CHANGE.

GEOGRID KEY:

MIRAFI 2XT GEOGRID –×·×·×·×·×·×·×·×–

GEOGRID LENGTH FOR THIS LAYER ONLY 4.5 FT

DATE	5/13/2016
SURVEYED	NE
ENGINEERED	DD
DRAWN	DB
CHECKED	DD
APPROVED	DD

REV.

NELSON ENGINEERING
P.O. BOX 1599, JACKSON WYOMING (307) 733-2087

DRAWING TITLE
RETAINING WALL B
PLAN AND PROFILE
STA 0+00 TO 1+80

JOB TITLE
SOUTH PARK LOOP
CONNECTOR PATHWAY PROJECT
TETON COUNTY, WY

DRAWING NO
4.2

JOB NO
15-257-02

S:\Proj2015\257-02 (Design - South Park Loop Pathway Connector)\Drawings\RETAINING WALL.dwg (4.2 RETAINING WALL B) - May 15 2016 01:36:04 pm PLOTTED BY: kurichner DWG FORMAT: 19.1

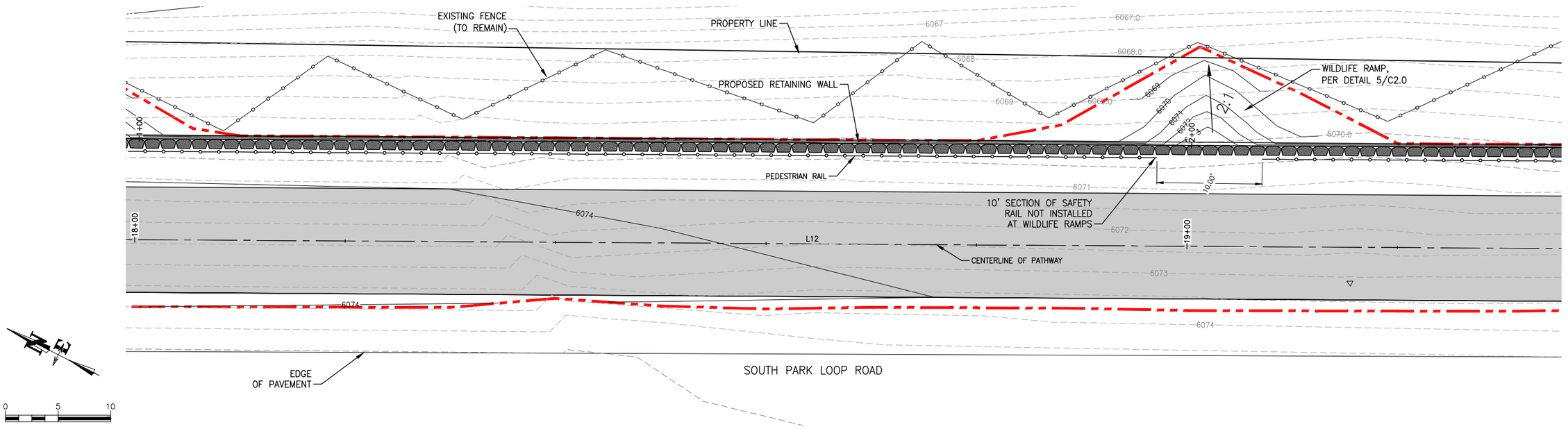

RETAINING WALL B (STA 1+10 – 2+20)

GENERAL NOTES:
1. USE KEYSTONE COMPAC BLOCK UNITS. CAP UNITS CAN BE COMPAC FULL OR HALF HEIGHT BLOCKS.
2. LAYOUT WALLS PER THE CIVIL DRAWINGS CONSIDERING A WALL FACE BATTER OF 1(H) TO 8(V).
3. STEP LOCATIONS SHALL NOT VARY MORE THAN 2 BLOCKS TO MATCH GRADES IN THE FIELD.
4. MINIMUM WALL EMBEDMENT SHALL BE NO LESS THAN 0.5 FEET WITH A LEVEL SLOPE IN FRONT OF WALLS.
5. GEOGRID LENGTH SHALL BE A MINIMUM OF 4-FT, MEASURED FROM THE FRONT OF WALL FACE, UNLESS OTHERWISE NOTED ON PROFILE IN SQUARE ON GRID LAYER. THE SQUARE INDICATES THE LENGTH AND DIRECTION ALONG THE PROFILE THE GRID LENGTH WILL CHANGE.

GEOGRID KEY:

MIRAFI 2XT GEOGRID — × · × · × · × · × · × · × —

GEOGRID LENGTH FOR THIS LAYER ONLY — 4.5 FT →

DATE	5/13/2016	REV.
SURVEYED	NE	
ENGINEERED	DD	
DRAWN	DB	
CHECKED	DD	
APPROVED	DD	

NELSON ENGINEERING
P.O. BOX 1599, JACKSON WYOMING (307) 733-2087

DRAWING TITLE
RETAINING WALL B
PLAN AND PROFILE
STA 1+10 TO 2+20

JOB TITLE
SOUTH PARK LOOP
CONNECTOR PATHWAY PROJECT
TETON COUNTY, WY

DRAWING NO 4.3

JOB NO 15-257-02

S:\Proj2015\257-02 (Design - South Park Loop Pathway Connector)\Drawings\RETAINING WALL.dwg (4.3 KEYWALL B (2)) - May 15 2016 01:36:27 pm PLOTTED BY: karichner DWG FORMAT: 19.1

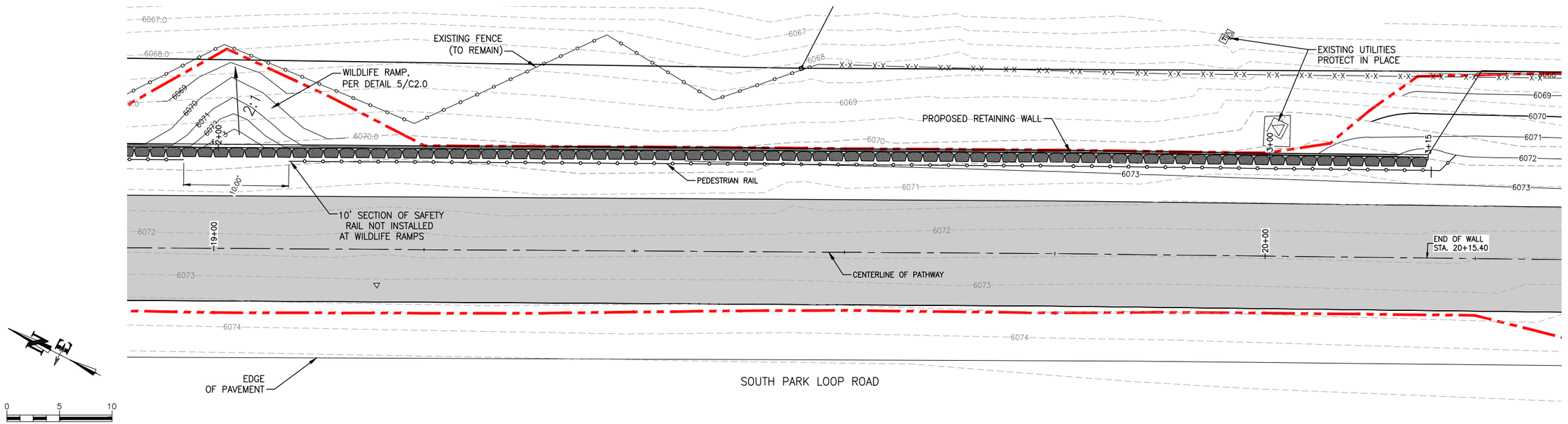

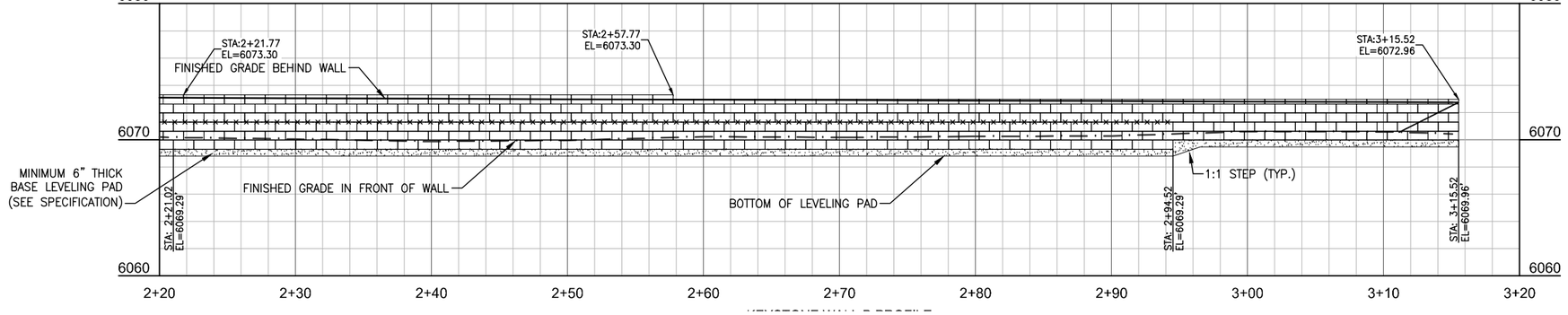

RETAINING WALL B (STA 2+20 – 3+15)

GENERAL NOTES:
1. USE KEYSTONE COMPAC BLOCK UNITS. CAP UNITS CAN BE COMPAC FULL OR HALF HEIGHT BLOCKS.
2. LAYOUT WALLS PER THE CIVIL DRAWINGS CONSIDERING A WALL FACE BATTER OF 1(H) TO 8(V).
3. STEP LOCATIONS SHALL NOT VARY MORE THAN 2 BLOCKS TO MATCH GRADES IN THE FIELD.
4. MINIMUM WALL EMBEDMENT SHALL BE NO LESS THAN 0.5 FEET WITH A LEVEL SLOPE IN FRONT OF WALLS.
5. GEOGRID LENGTH SHALL BE A MINIMUM OF 4-FT, MEASURED FROM THE FRONT OF WALL FACE, UNLESS OTHERWISE NOTED ON PROFILE IN SQUARE ON GRID LAYER. THE SQUARE INDICATES THE LENGTH AND DIRECTION ALONG THE PROFILE THE GRID LENGTH WILL CHANGE.

GEOGRID KEY:

MIRAFI 2XT GEOGRID — X · X · X · X · X · X · X · X —

GEOGRID LENGTH FOR THIS LAYER ONLY — 4.5 FT →

DATE	5/13/2016
SURVEYED	NE
ENGINEERED	DD
DRAWN	DB
CHECKED	DD
APPROVED	DD

REV.

NELSON ENGINEERING
P.O. BOX 1599, JACKSON WYOMING (307) 733-2087

DRAWING TITLE
RETAINING WALL B
PLAN AND PROFILE
STA 2+20 TO 3+15

JOB TITLE
SOUTH PARK LOOP
CONNECTOR PATHWAY PROJECT
TETON COUNTY, WY

DRAWING NO
4.4

JOB NO
15-257-02

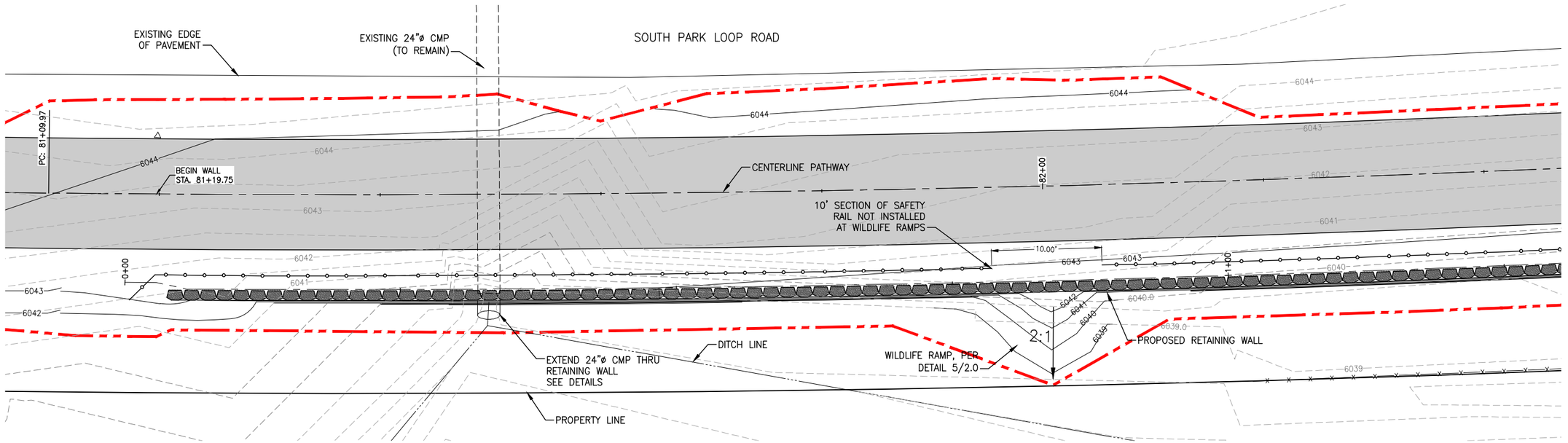

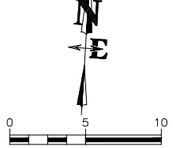

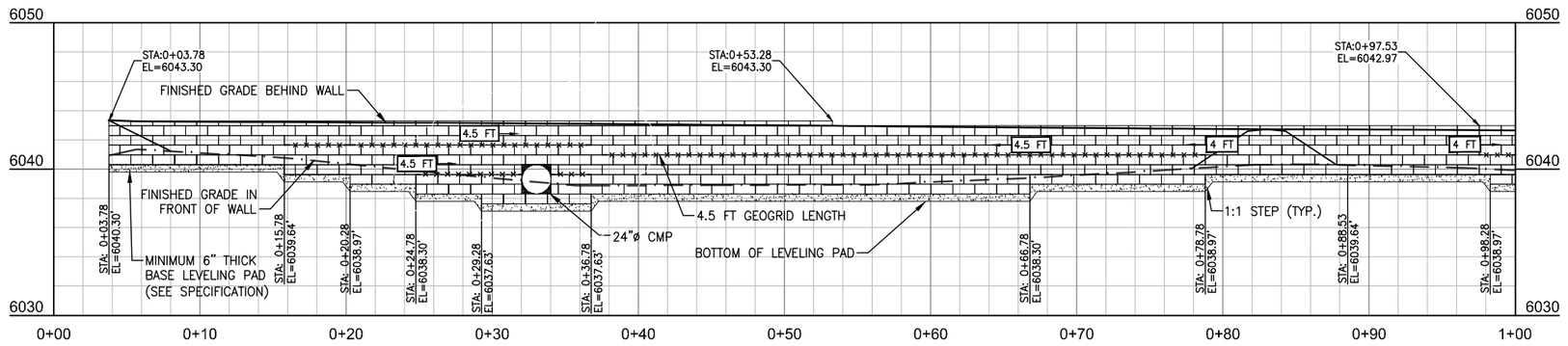

RETAINING WALL C (STA 0+00 – 1+00)

GENERAL NOTES:
1. USE KEYSTONE COMPAC BLOCK UNITS. CAP UNITS CAN BE COMPAC FULL OR HALF HEIGHT BLOCKS.
2. LAYOUT WALLS PER THE CIVIL DRAWINGS CONSIDERING A WALL FACE BATTER OF 1(H) TO 8(V).
3. STEP LOCATIONS SHALL NOT VARY MORE THAN 2 BLOCKS TO MATCH GRADES IN THE FIELD.
4. MINIMUM WALL EMBEDMENT SHALL BE NO LESS THAN 0.5 FEET WITH A LEVEL SLOPE IN FRONT OF WALLS.
5. GEOGRID LENGTH SHALL BE A MINIMUM OF 4–FT, MEASURED FROM THE FRONT OF WALL FACE, UNLESS OTHERWISE NOTED ON PROFILE IN SQUARE ON GRID LAYER. THE SQUARE INDICATES THE LENGTH AND DIRECTION ALONG THE PROFILE THE GRID LENGTH WILL CHANGE.

GEOGRID KEY:

MIRAFI 2XT GEOGRID

GEOGRID LENGTH FOR THIS LAYER ONLY — 4.5 FT

		REV.
DATE	5/13/2016	
SURVEYED	NE	
ENGINEERED	DD	
DRAWN	DB	
CHECKED	DD	
APPROVED	DD	

NELSON ENGINEERING
P.O. BOX 1599, JACKSON WYOMING (307) 733-2087

DRAWING TITLE: RETAINING WALL C PLAN AND PROFILE STA 0+00 TO 1+00

JOB TITLE: SOUTH PARK LOOP CONNECTOR PATHWAY PROJECT TETON COUNTY, WY

DRAWING NO: 4.5

JOB NO: 15-257-02

S:\Proj\2015\257-02 (Design - South Park Loop Pathway Connector)\Drawings\RETAINING WALL.dwg (4.5 RETAINING WALL C) - May 13 2016 01:37:13 pm PLOTTED BY: karlchmar DWG FORMAT: 191

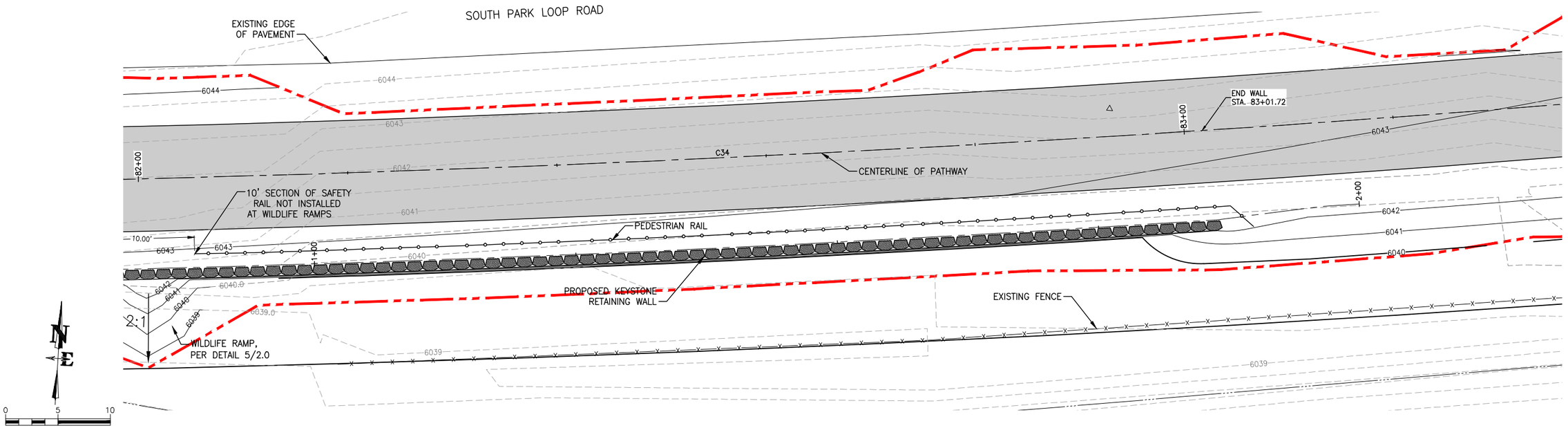

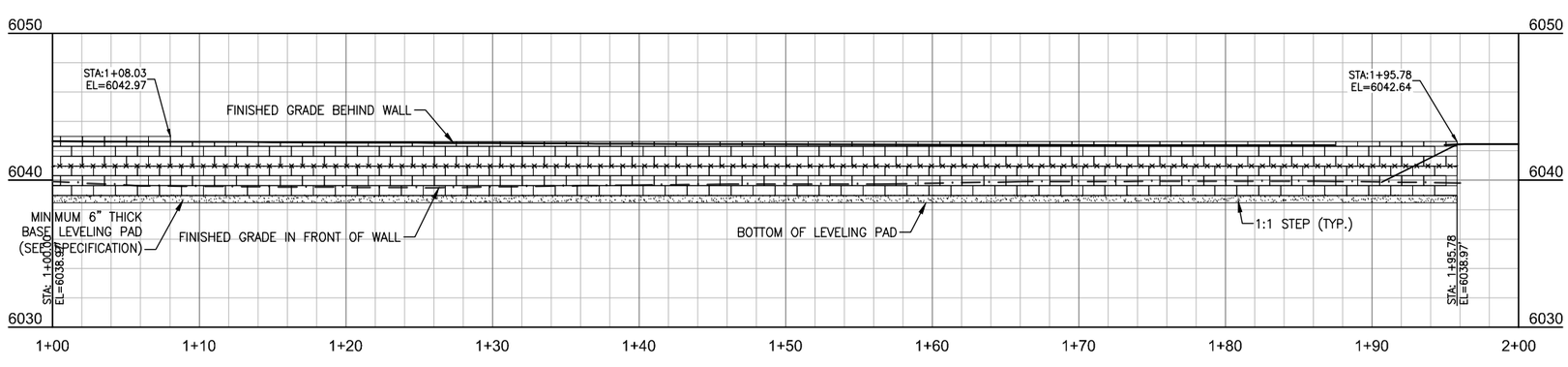

RETAINING WALL C (STA 0+00 – 1+96)

GENERAL NOTES:
1. USE KEYSTONE COMPAC BLOCK UNITS. CAP UNITS CAN BE COMPAC FULL OR HALF HEIGHT BLOCKS.
2. LAYOUT WALLS PER THE CIVIL DRAWINGS CONSIDERING A WALL FACE BATTER OF 1(H) TO 8(V).
3. STEP LOCATIONS SHALL NOT VARY MORE THAN 2 BLOCKS TO MATCH GRADES IN THE FIELD.
4. MINIMUM WALL EMBEDMENT SHALL BE NO LESS THAN 0.5 FEET WITH A LEVEL SLOPE IN FRONT OF WALLS.
5. GEOGRID LENGTH SHALL BE A MINIMUM OF 4–FT, MEASURED FROM THE FRONT OF WALL FACE, UNLESS OTHERWISE NOTED ON PROFILE IN SQUARE ON GRID LAYER. THE SQUARE INDICATES THE LENGTH AND DIRECTION ALONG THE PROFILE THE GRID LENGTH WILL CHANGE.

GEOGRID KEY:

MIRAFI 2XT GEOGRID –×·×·×·×·×·×·×·×–

GEOGRID LENGTH FOR THIS LAYER ONLY 4.5 FT →

DATE	5/13/2016	REV.
SURVEYED	NE	
ENGINEERED	DD	
DRAWN	DB	
CHECKED	DD	
APPROVED	DD	

NELSON ENGINEERING
P.O. BOX 1599, JACKSON WYOMING (307) 733-2087

DRAWING TITLE
RETAINING WALL C
PLAN AND PROFILE
STA 1+00 TO 2+00

JOB TITLE
SOUTH PARK LOOP
CONNECTOR PATHWAY PROJECT
TETON COUNTY, WY

DRAWING NO 4.6

JOB NO 15-257-02

S:\Proj2015\257-02 (Design - South Park Loop Pathway Connector)\Drawings\RETAINING WALL.dwg <46 KEYWALL C (2)> - May 15 2016 01:37:37 pm PLOTTED BY: karichner DWG FORMAT: 191

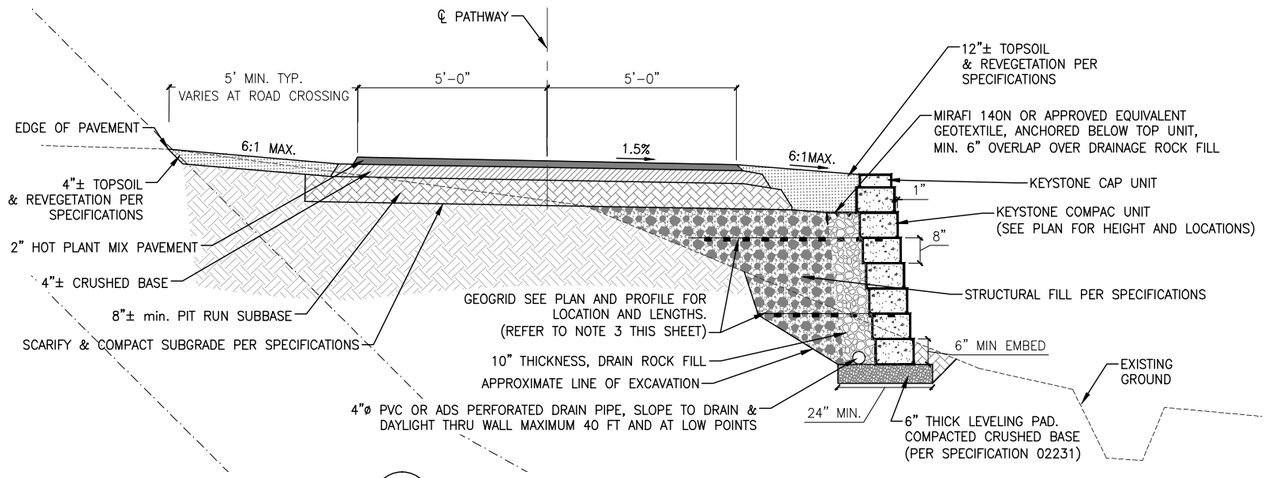

1 / 4.7 KEYSTONE RETAINING WALL TYPICAL SECTION

N.T.S.

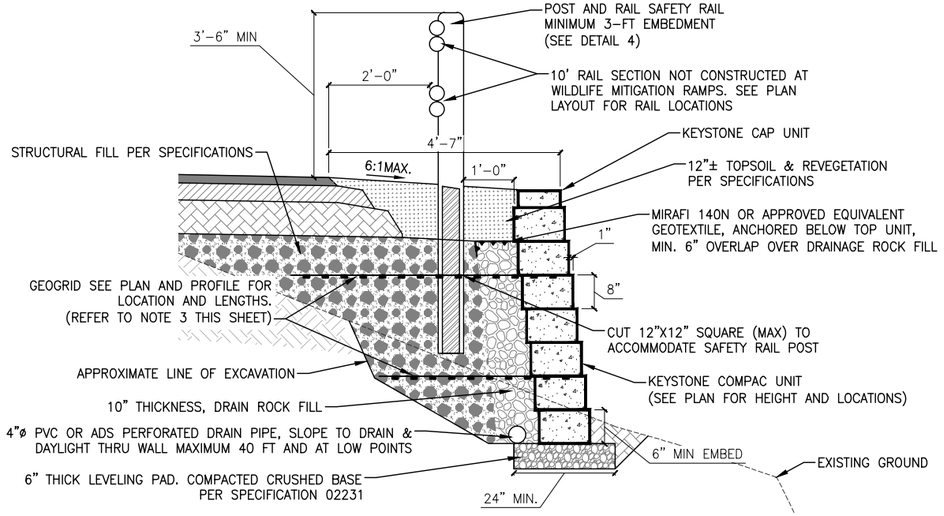

2 / 4.7 KEYSTONE RETAINING WALL WITH POST

N.T.S.

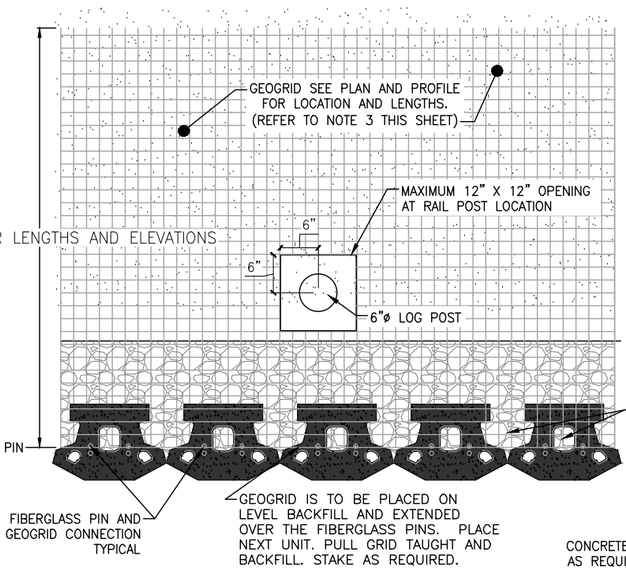

3 / 4.7 GEOGRID & PIN CONNECTION

N.T.S.

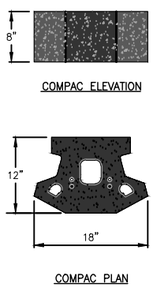

GENERAL NOTES:

1. THE FOUNDATION SUBGRADE IS TO BE APPROVED BY THE ENGINEER PRIOR TO THE PLACEMENT OF THE LEVELING PAD.
2. CONTRACTOR SHALL CONFORM TO THE MANUFACTURERS SPECIFICATIONS FOR CORRECT INSTALLATION AND DIRECTION OF ORIENTATION FOR GEOGRID.
3. THE LENGTH OF GEOGRID SHALL BE MEASURED FROM THE FRONT OF THE WALL FACE AT THE FIBERGLASS PIN AND GEOGRID CONNECTION AS SHOWN IN DETAIL 3 ON THIS SHEET.

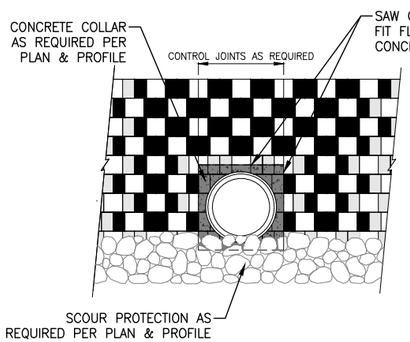

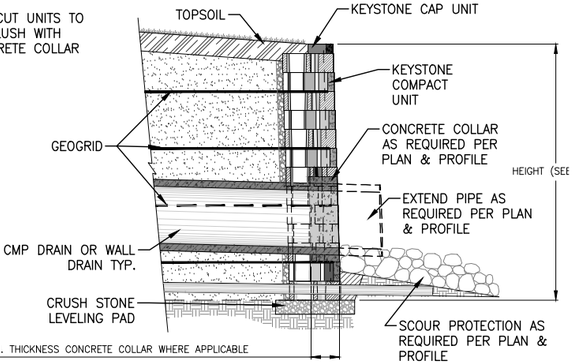

5 / 4.7 TYPICAL PIPE OUTLET DETAIL

N.T.S.

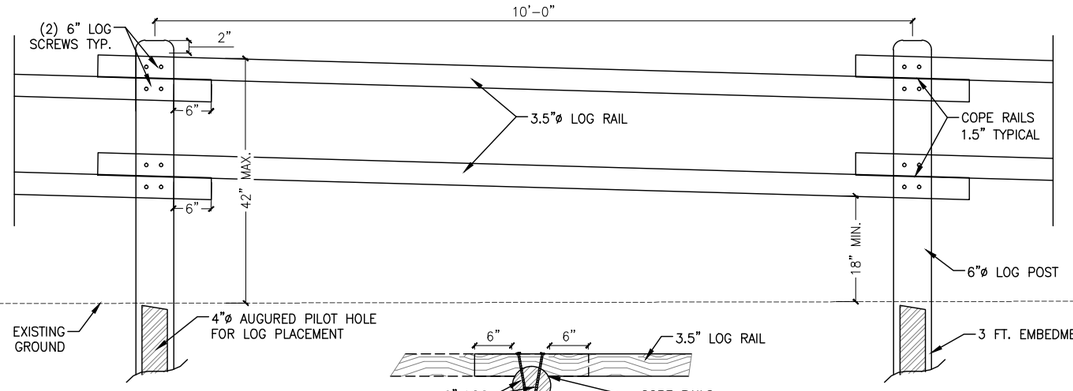

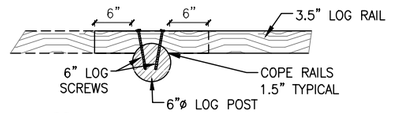

4 / 4.7 PEDESTRIAN RAIL DETAIL

N.T.S.

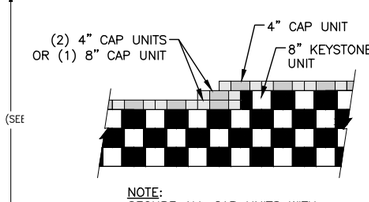

6 / 4.7 TOP OF WALL STEPS

N.T.S.

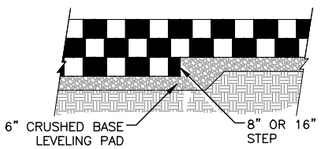

ELEVATION

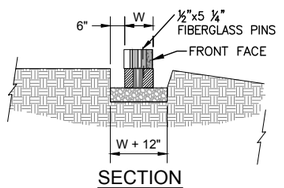

SECTION

7 / 4.7 LEVELING PAD DETAIL

N.T.S.

DATE	5/13/2016	REV.
SURVEYED	NE	
ENGINEERED	DD	
DRAWN	DB	
CHECKED	DD	
APPROVED	DD	

NELSON ENGINEERING
P.O. BOX 1599, JACKSON WYOMING (307) 733-2087

DRAWING TITLE: KEYSTONE RETAINING WALL TYPICAL SECTIONS AND DETAILS

JOB TITLE: SOUTH PARK LOOP CONNECTOR PATHWAY PROJECT TETON COUNTY, WY

DRAWING NO: 4.7

JOB NO: 15-257-02

S:\Proj\2015\257-02 Design - South Park Loop Pathway Connector\Drawings\RETAINING WALL.dwg <KEYSTONE RETAINING WALL DETAILS> - May 15 2016 09:38:24 pm PLOTTED BY kwirchner
FORMAT: 19i

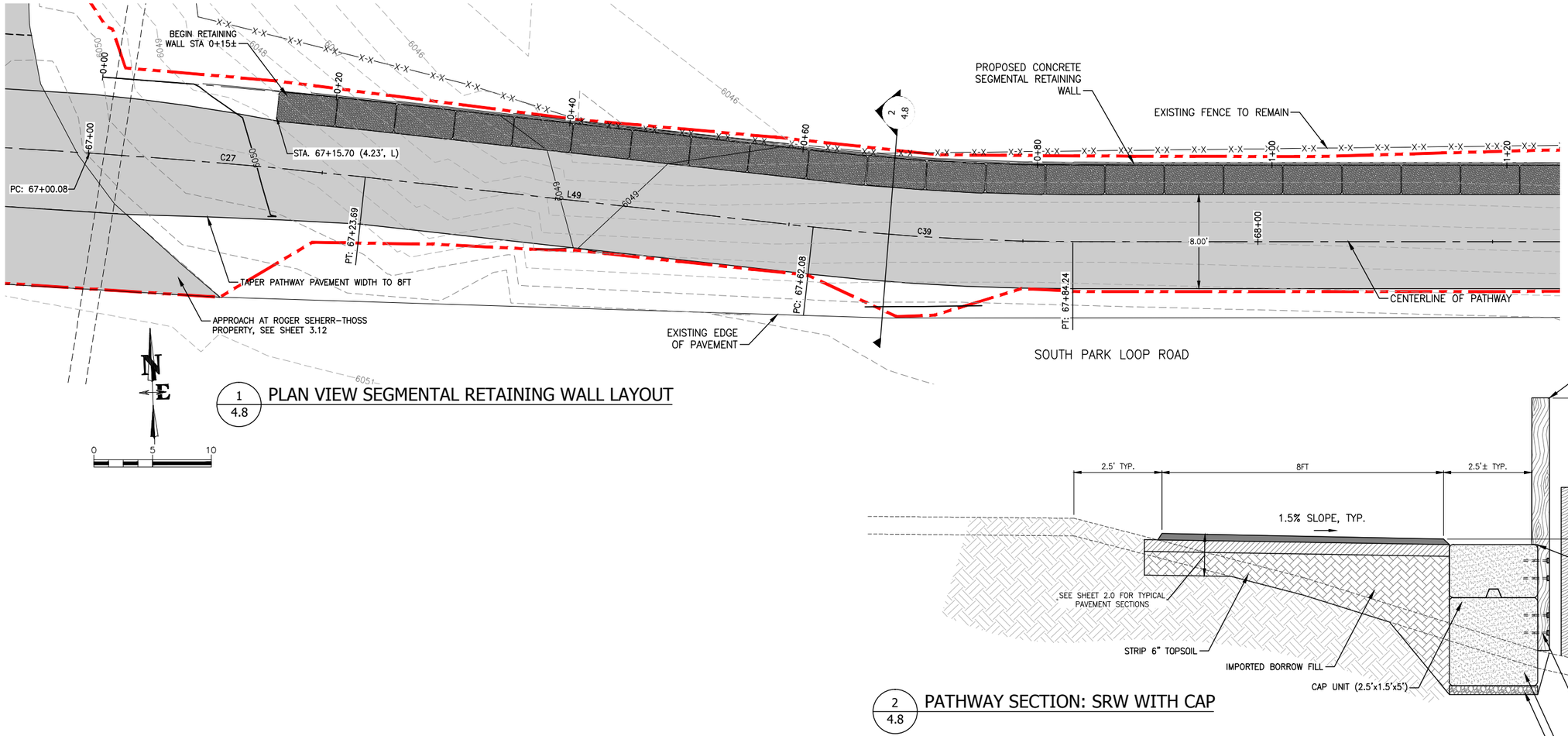

1/4.8 PLAN VIEW SEGMENTAL RETAINING WALL LAYOUT

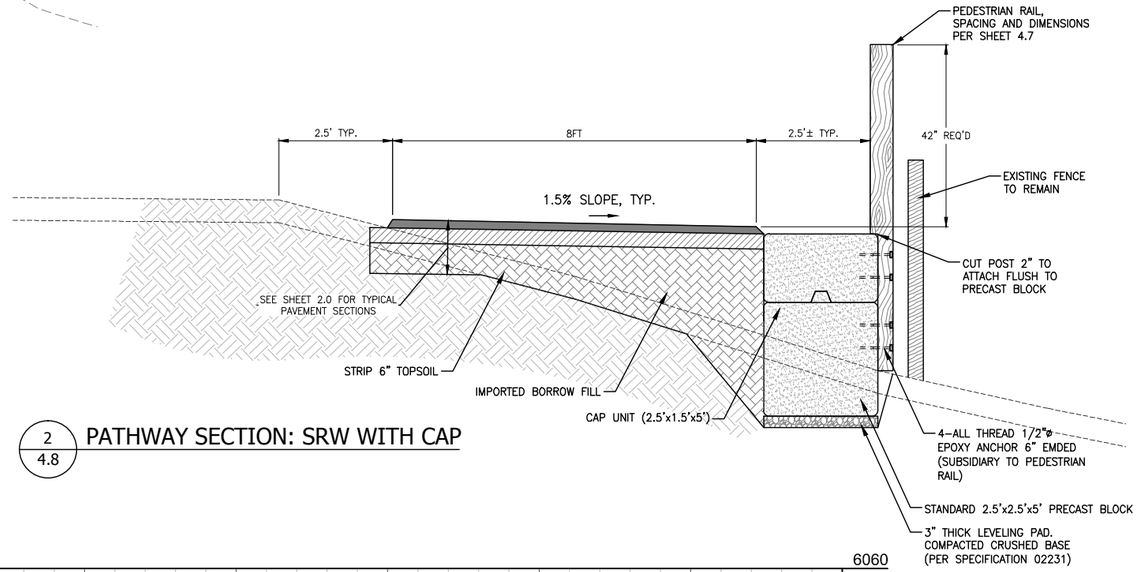

2/4.8 PATHWAY SECTION: SRW WITH CAP

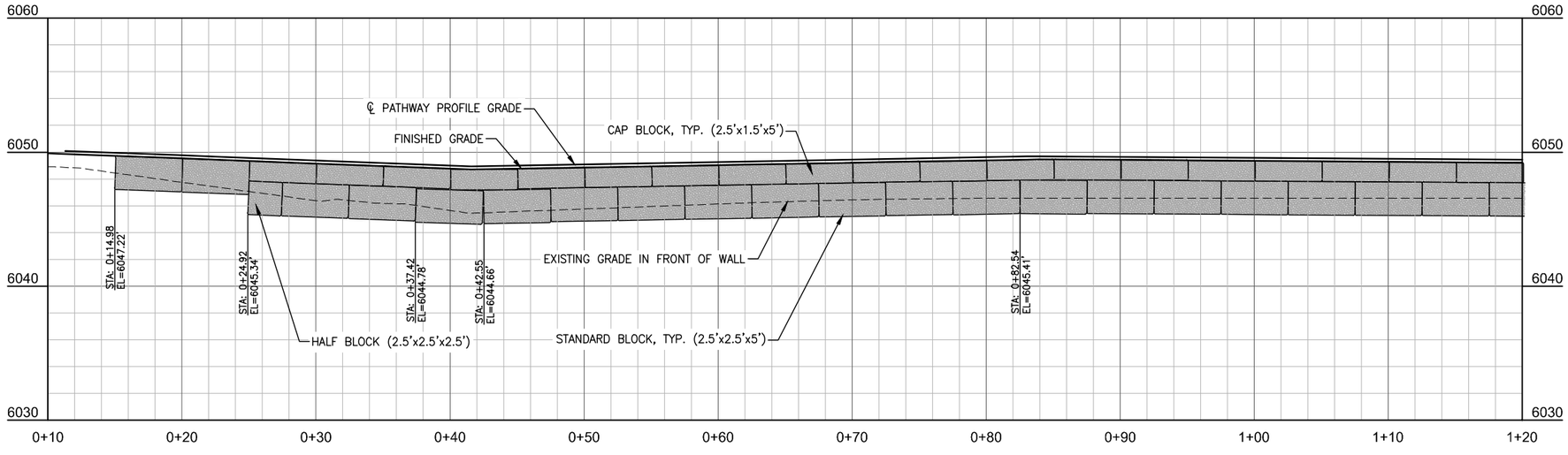

REV.	DATE	
	5/13/2016	
	SURVEYED	NE
	ENGINEERED	DD
	DRAWN	DB
	CHECKED	DD
	APPROVED	DD

NELSON ENGINEERING
P.O. BOX 1599, JACKSON WYOMING (307) 733-2087

DRAWING TITLE: CONCRETE SEGMENTAL RETAINING WALL
PLAN AND PROFILE
STA 0+00 TO 1+20

JOB TITLE: SOUTH PARK LOOP
CONNECTOR PATHWAY PROJECT
TETON COUNTY, WY

DRAWING NO: 4.8

JOB NO: 15-257-02

S:\Proj\2015\257-02 Design - South Park Loop Pathway Connector\Drawings\RETAINING WALL.dwg <CONCRETE SEGMENTED RETAINING WALL 1> - May 13, 2016 01:38:59 pm PLOTTED BY: kwirchner DWG FORMAT: 193

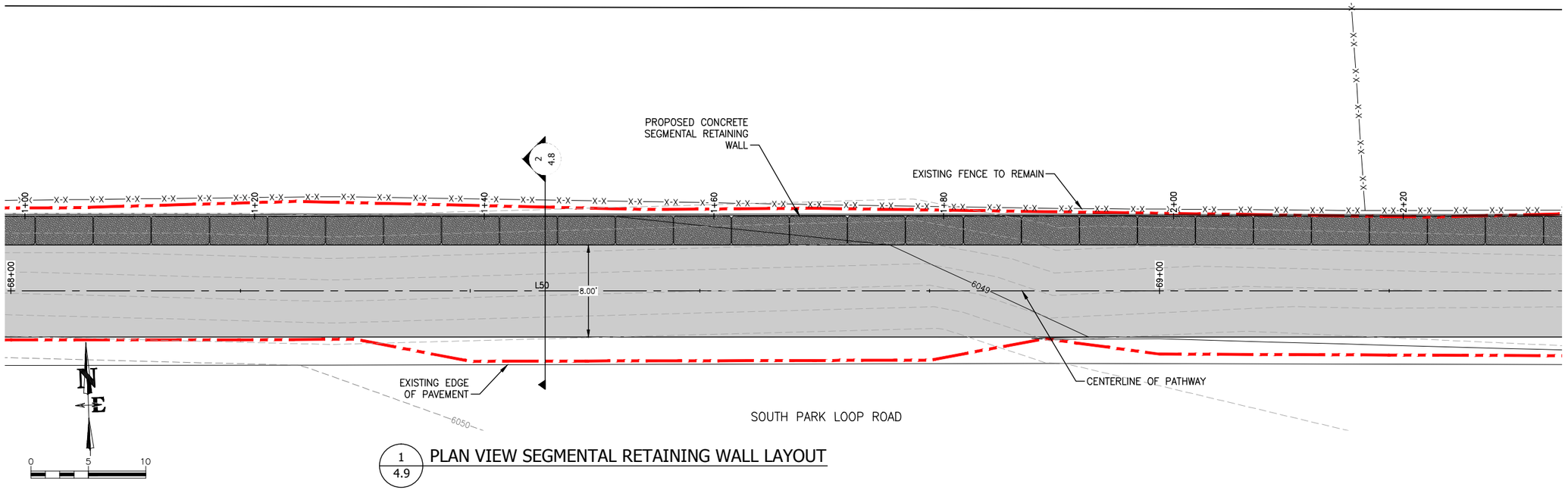

1 / 4.9 PLAN VIEW SEGMENTAL RETAINING WALL LAYOUT

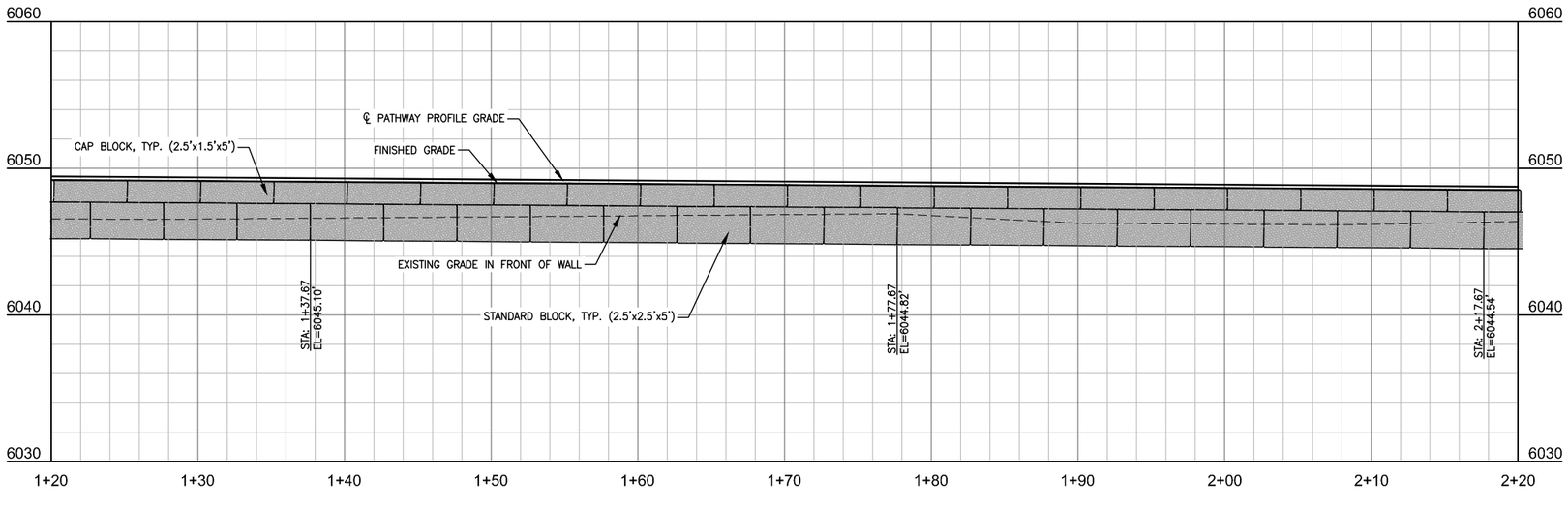

DATE	5/13/2016
SURVEYED	NE
ENGINEERED	DD
DRAWN	DB
CHECKED	DD
APPROVED	DD

REV.

NELSON ENGINEERING
P.O. BOX 1599, JACKSON WYOMING (307) 733-2087

DRAWING TITLE
CONCRETE SEGMENTAL RETAINING WALL
PLAN AND PROFILE
STA 1+20 TO 2+20

JOB TITLE
SOUTH PARK LOOP
CONNECTOR PATHWAY PROJECT
TETON COUNTY, WY

DRAWING NO 4.9

JOB NO 15-257-02

S:\Proj\2015\257-02 Design - South Park Loop Pathway Connector\Drawings\RETAINING WALL.dwg <CONCRETE SEGMENTED RETAINING WALL (CONTINUED)> - May 13, 2016 03:39:23 pm PLOTTED BY: kerichener DWG TO PDF.pc3

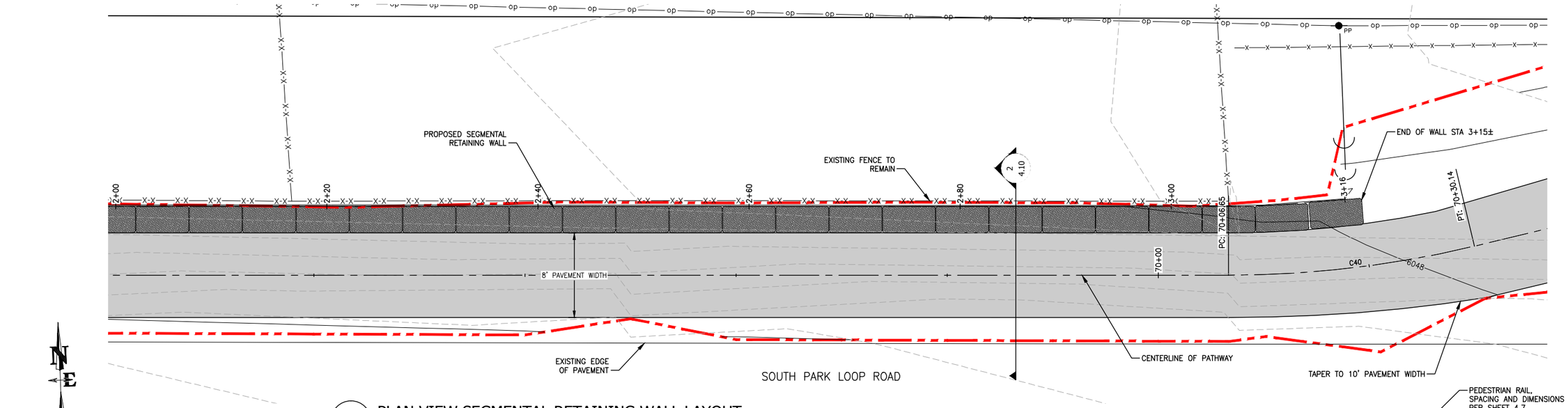

1 / 4.10 PLAN VIEW SEGMENTAL RETAINING WALL LAYOUT

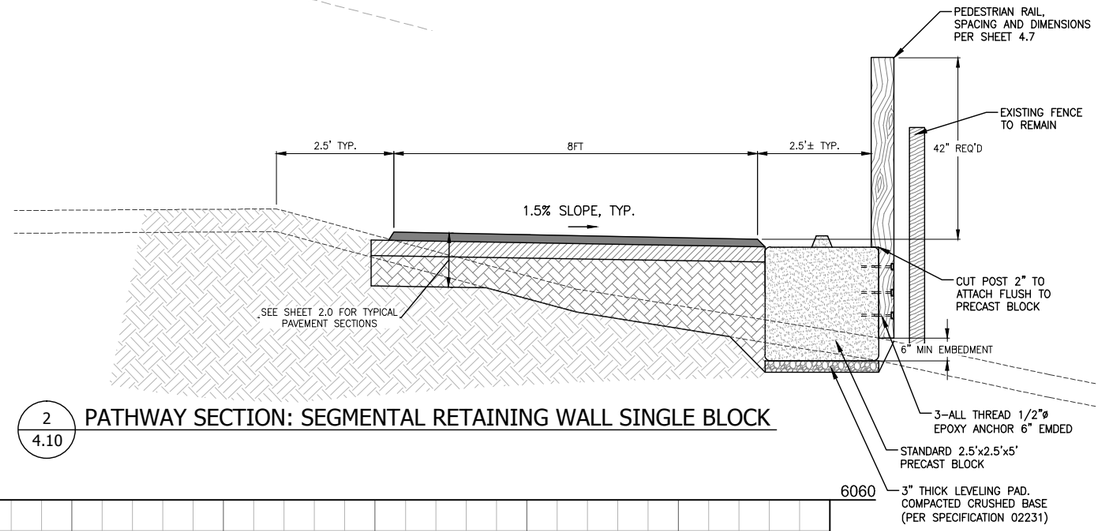

2 / 4.10 PATHWAY SECTION: SEGMENTAL RETAINING WALL SINGLE BLOCK

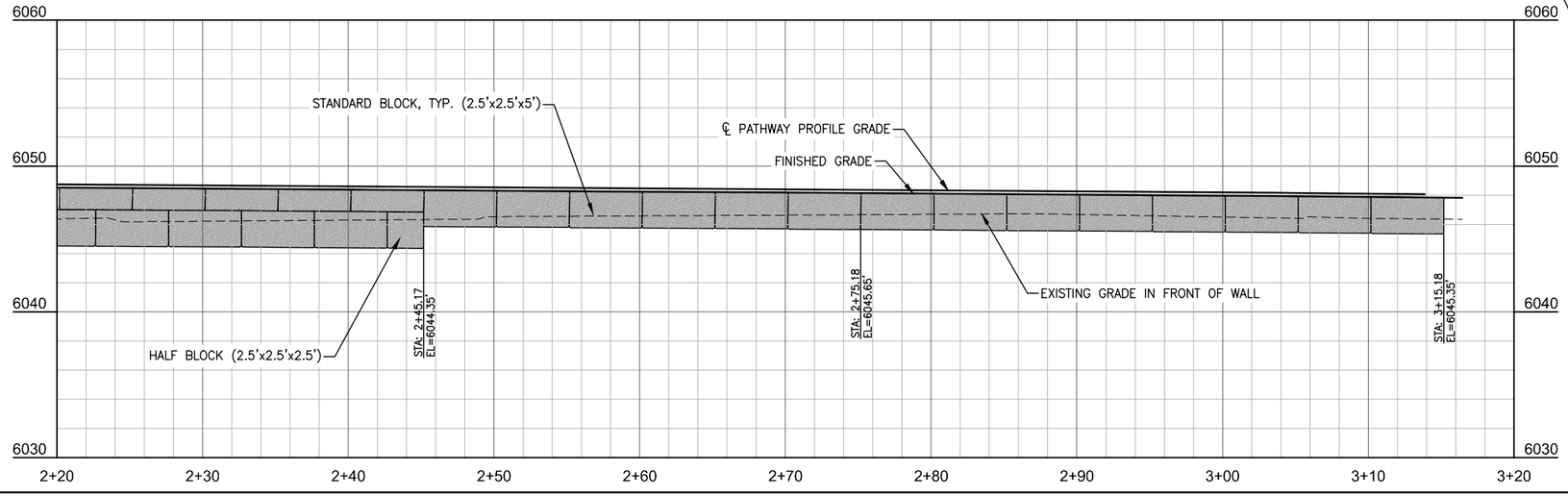

DATE	5/13/2016
SURVEYED	NE
ENGINEERED	DD
DRAWN	DB
CHECKED	DD
APPROVED	DD

REV.

NELSON ENGINEERING
P.O. BOX 1599, JACKSON WYOMING (307) 733-2087

DRAWING TITLE
CONCRETE SEGMENTAL RETAINING WALL
PLAN AND PROFILE
STA 2+20 TO 3+20

JOB TITLE
SOUTH PARK LOOP
CONNECTOR PATHWAY PROJECT
TETON COUNTY, WY

DRAWING NO 4.10

JOB NO 15-257-02

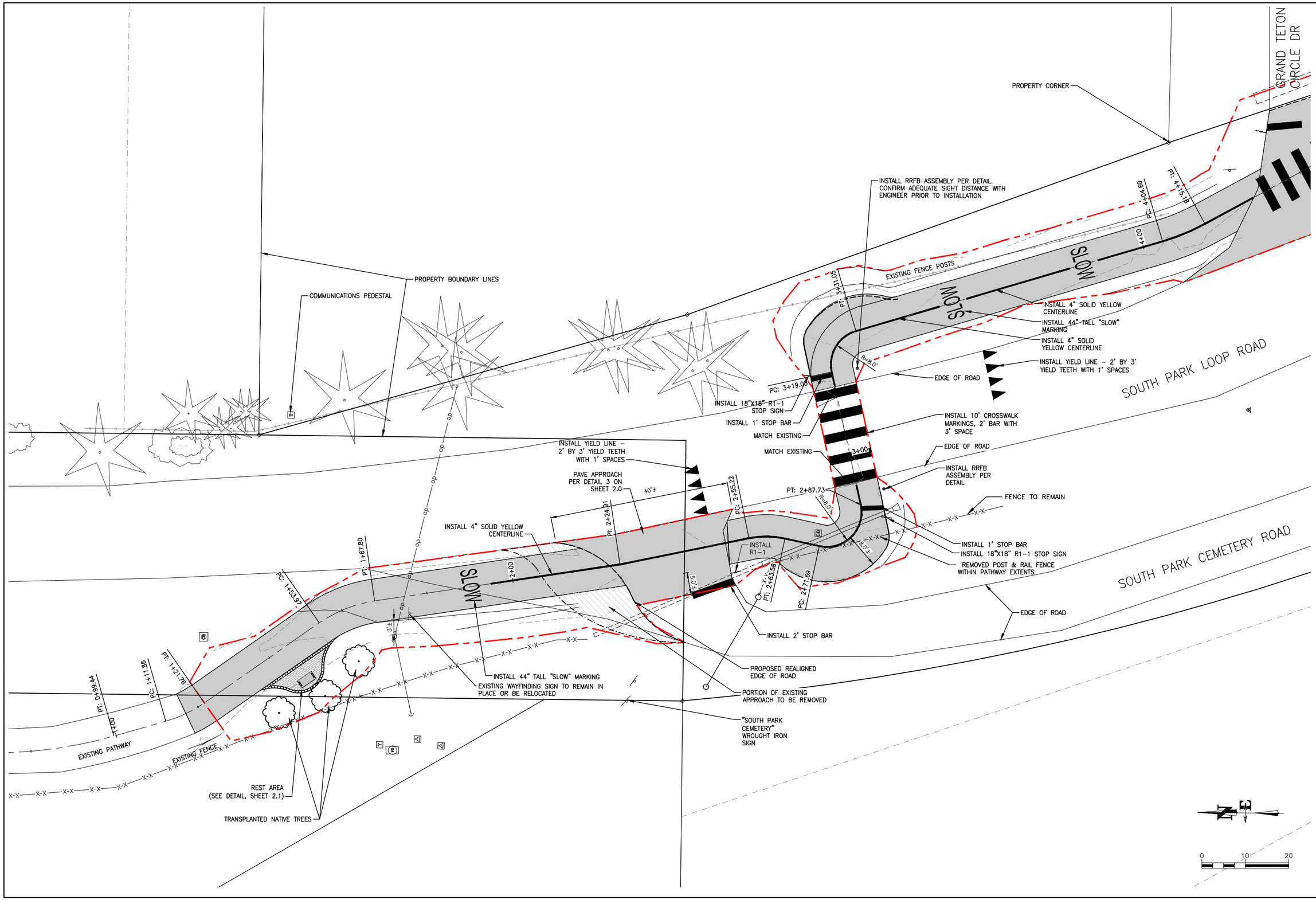

DATE	5/13/2016	REV.
SURVEYED	NE	
ENGINEERED	DD	
DRAWN	DB	
CHECKED	DD	
APPROVED	DD	

NELSON ENGINEERING
P.O. BOX 1599, JACKSON WYOMING (307) 733-2087

DRAWING TITLE
PLANVIEW OF ROAD CROSSING
NORTHERN SOUTH PARK LOOP ROAD

JOB TITLE
SOUTH PARK LOOP
CONNECTOR PATHWAY PROJECT
TETON COUNTY, WY

DRAWING NO 5.0

JOB NO 15-257-02

S:\Proj2015\257-02 (Design - South Park Loop Pathway Connector)\Drawings\Layout Drawings\PLANVIEW_CROSSINGS.dwg <SOUTH PARK CEMETARY ROAD CROSSING> - May 16 2016 12:24:36 pm PLOTTED BY: karichner DWG FORMAT: 191

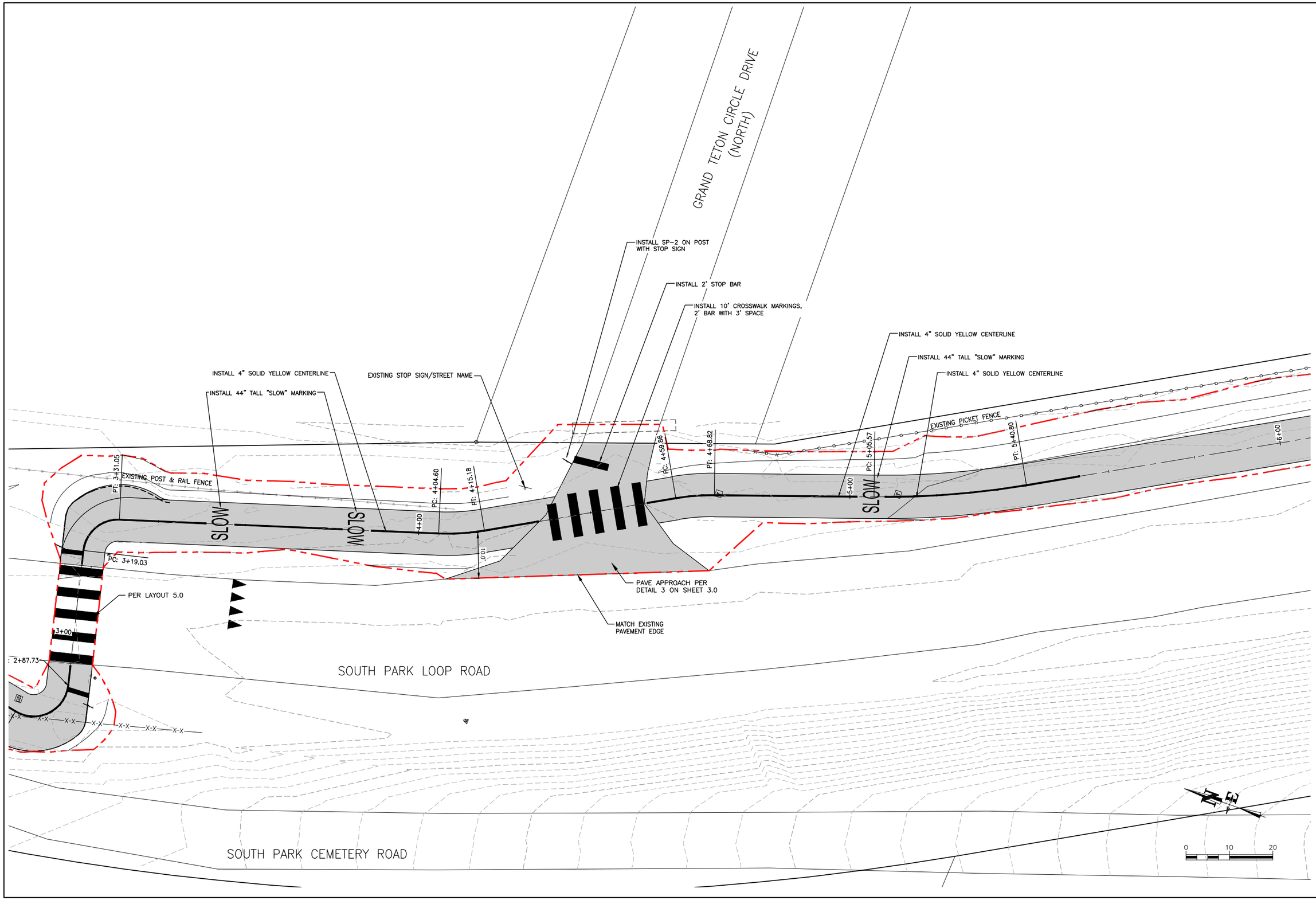

DATE	5/13/2016
SURVEYED	NE
ENGINEERED	DD
DRAWN	DB
CHECKED	DD
APPROVED	DD

REV.

NELSON ENGINEERING
P.O. BOX 1599, JACKSON WYOMING (307) 733-2087

DRAWING TITLE
PLANVIEW OF ROAD CROSSING
NORTHERN GRAND TETON
CIRCLE DRIVE CROSSING

JOB TITLE
SOUTH PARK LOOP
CONNECTOR PATHWAY PROJECT
TETON COUNTY, WY

DRAWING NO
5.1

JOB NO
15-257-02

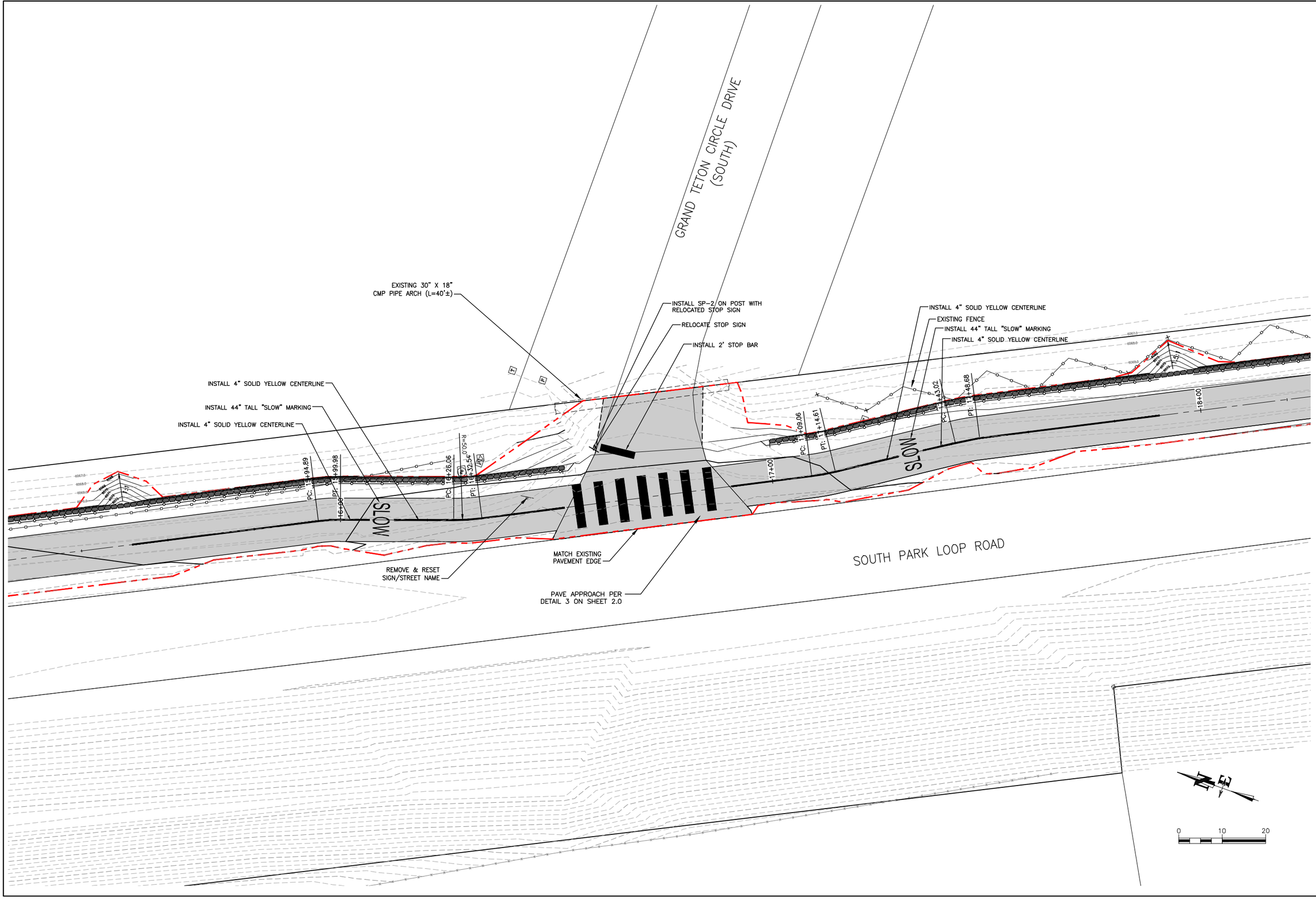

DATE	5/13/2016
SURVEYED	NE
ENGINEERED	DD
DRAWN	DB
CHECKED	DD
APPROVED	DD

REV.

NELSON ENGINEERING
P.O. BOX 1599, JACKSON WYOMING (307) 733-2087

DRAWING TITLE
PLANVIEW OF ROAD CROSSING
SOUTHERN GRAND TETON
CIRCLE DRIVE CROSSING

JOB TITLE
SOUTH PARK LOOP
CONNECTOR PATHWAY PROJECT
TETON COUNTY, WY

DRAWING NO
5.2

JOB NO
15-257-02

S:\Proj2015\257-02 (Design - South Park Loop Pathway Connector)\Drawings\Layout Drawings\PLANVIEW_CROSSINGS.dwg (GRAND TETON CIRCLE DRIVE SOUTH CROSSING) - May 15 2016 01:41:20 pm PLOTTED BY: karichner DWG FORMAT: 191

S:\Proj2015\257-02 (Design - South Park Loop Pathway Connector)\Drawings\Layout Drawings\PLANVIEW_CROSSINGS.dwg (SOUTH PARK RANCH ROAD CROSSING) - May 16 2016 12:26:00 pm PLOTTED BY: korichner DWG FORMAT: 19.1

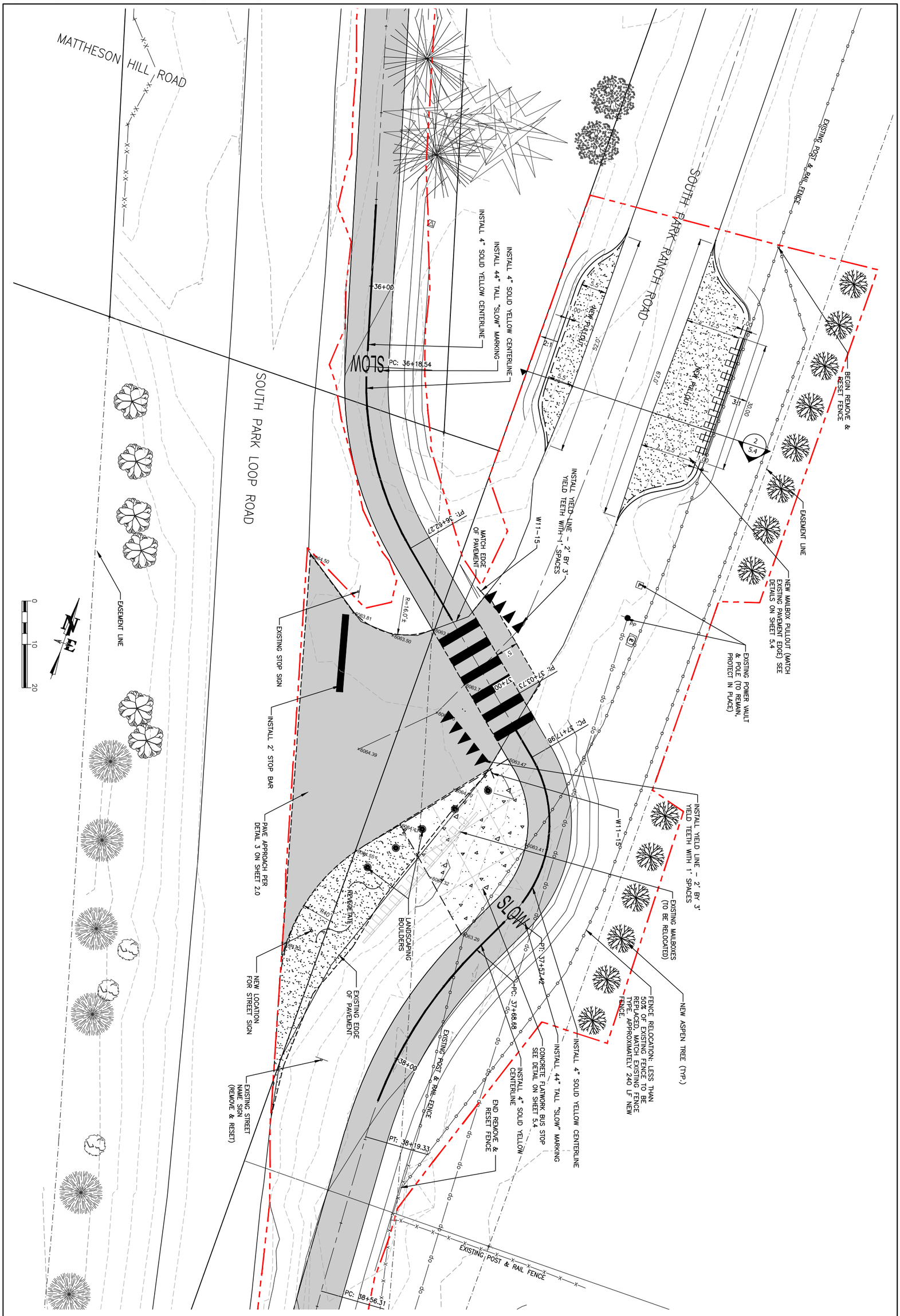

DRAWING NO	JOB TITLE	DRAWING TITLE		DATE	5/13/2016	REV.
5.3	SOUTH PARK LOOP	PLANVIEW OF ROAD CROSSING	NELSON ENGINEERING	SURVEYED	NE	
JOB NO	CONNECTOR PATHWAY PROJECT	SOUTH PARK RANCH ROAD	P.O. BOX 1599, JACKSON WYOMING (307) 733-2087	ENGINEERED	DD	
15-257-02	TETON COUNTY, WY			DRAWN	DB	
				CHECKED	DD	
				APPROVED	DD	

NOTE: NEW STRUCTURE TO BE BUILT FOR EXISTING MAILBOXES, RE-ARRANGED BOXES NUMERICALLY BY STREET NUMBER. ~45 BOXES EXISTING. PROVIDING SPACE FOR ~60 TOTAL MAILBOXES.

USE PRESSURE TREATED LUMBER FOR ALL DIMENSIONED COMPONENTS. REINFORCE AS NECESSARY FOR STABILITY.

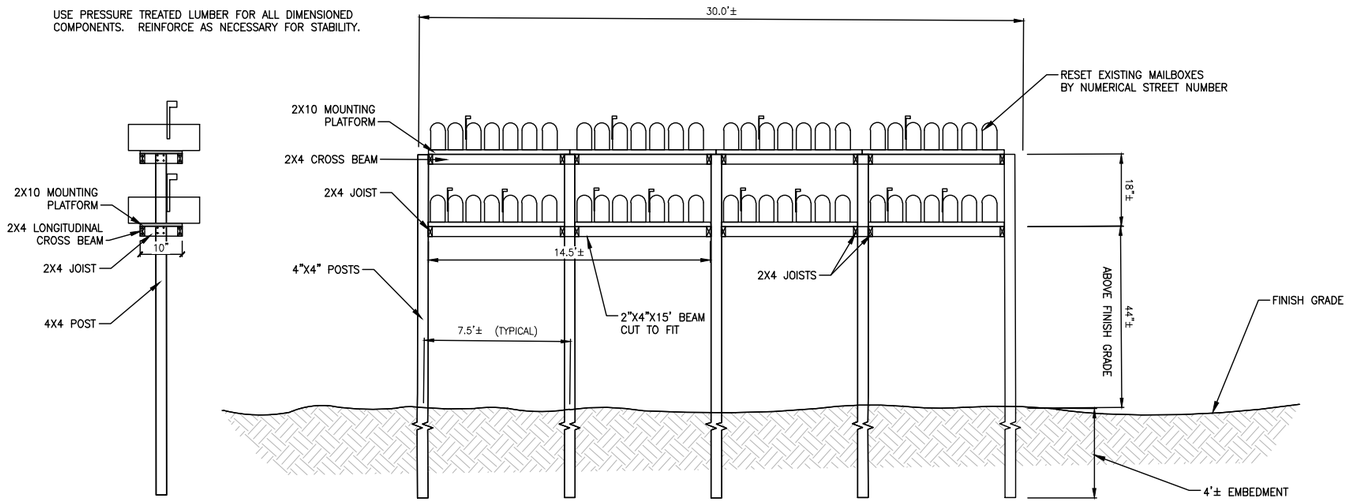

1 / 5.4 MAILBOX ASSEMBLY

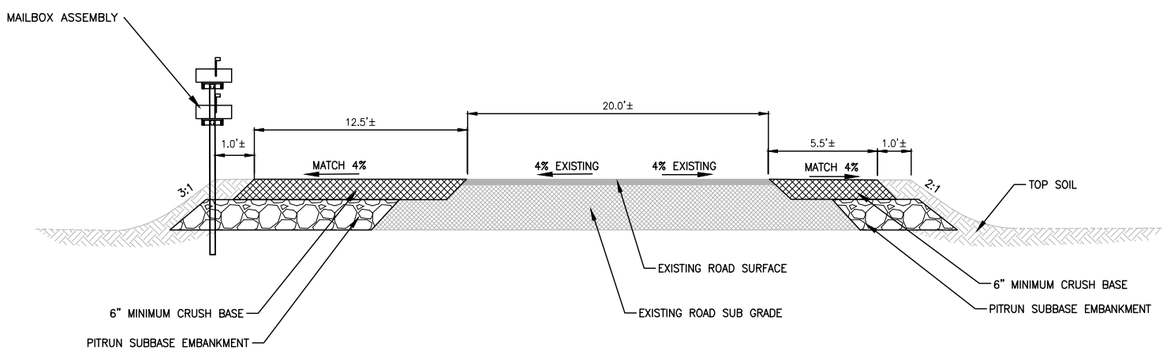

2 / 5.4 PATHWAY SECTION: SOUTH PARK RANCH RD MAILBOX PULLOUT

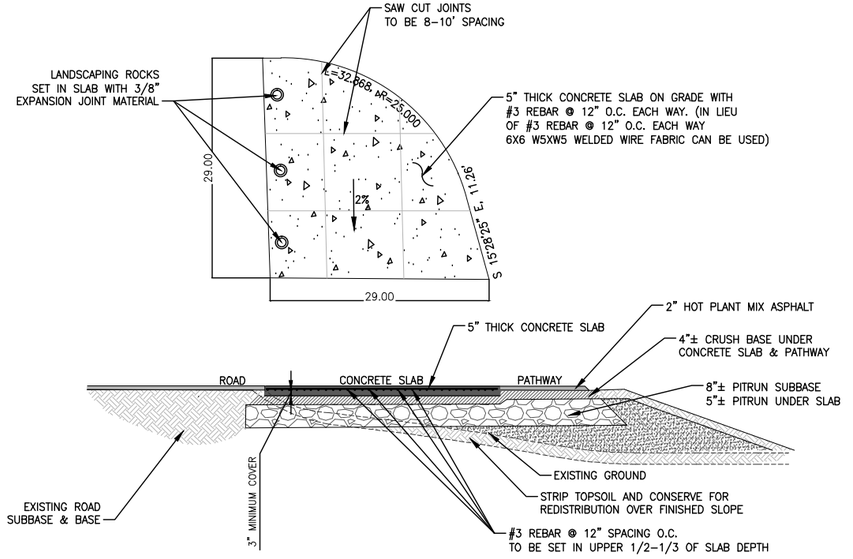

3 / 5.4 PLAN & SECTION VIEW: BUS STOP SLAB

DATE	5/13/2016	REV.
SURVEYED	NE	
ENGINEERED	DD	
DRAWN	DB	
CHECKED	DD	
APPROVED	DD	

NELSON ENGINEERING
P.O. BOX 1599, JACKSON WYOMING (307) 733-2087

DRAWING TITLE
TYPICAL SECTIONS

JOB TITLE
SOUTH PARK LOOP
CONNECTOR PATHWAY PROJECT
TETON COUNTY, WY

DRAWING NO 5.4

JOB NO 15-257-02

S:\Proj2015\257-02 (Design - South Park Loop Pathway Connector)\Drawings\DETAILS & SECTIONS.dwg <SOUTH PARK RANCH ROAD DETAILS> - May 15 2016 04:42:00 pm PLOTTED BY: karichner

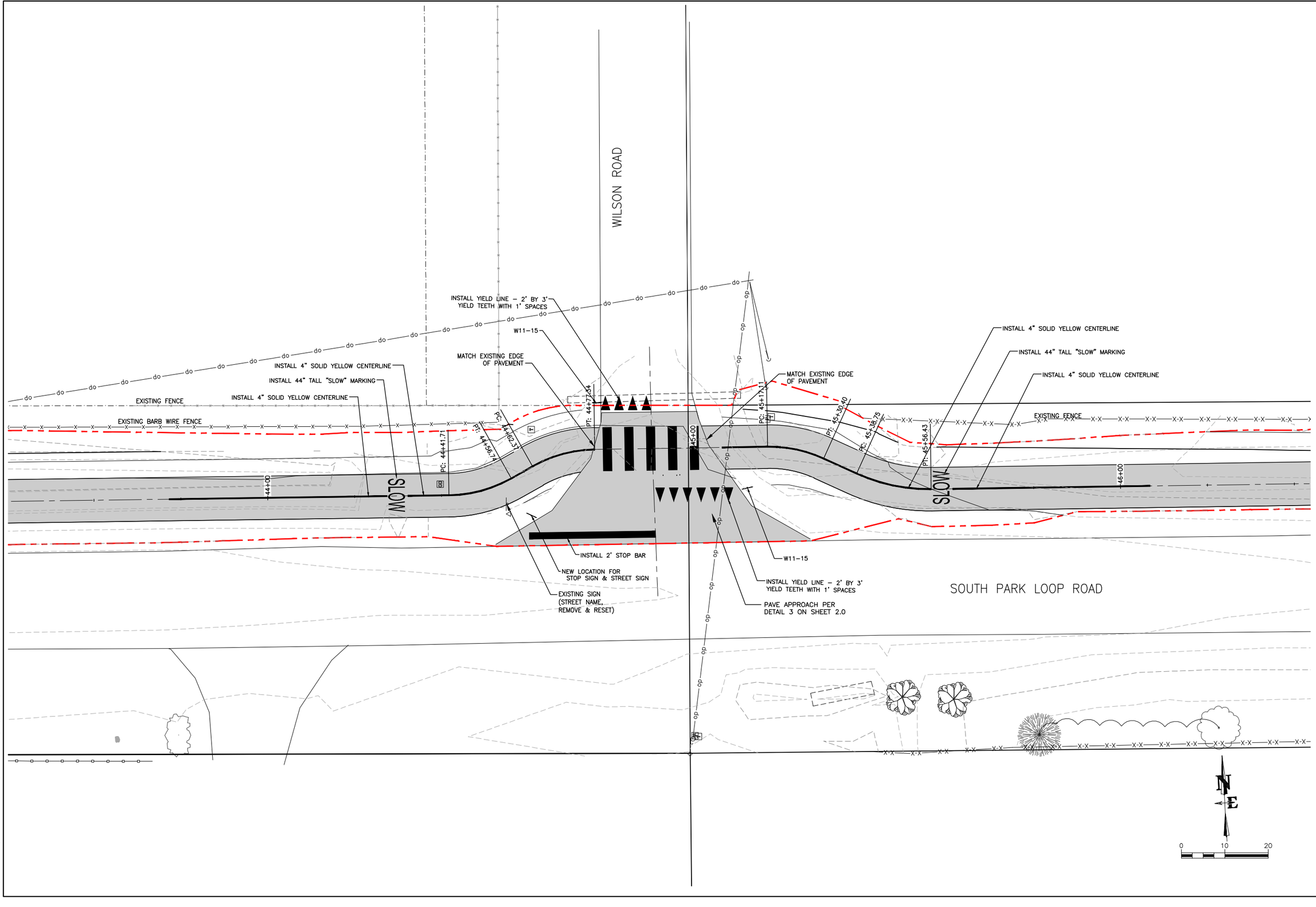

DATE	5/13/2016
SURVEYED	NE
ENGINEERED	DD
DRAWN	DB
CHECKED	DD
APPROVED	DD

REV.

NELSON ENGINEERING
P.O. BOX 1599, JACKSON WYOMING (307) 733-2087

DRAWING TITLE
PLANVIEW OF ROAD CROSSING
WILSON ROAD

JOB TITLE
SOUTH PARK LOOP
CONNECTOR PATHWAY PROJECT
TETON COUNTY, WY

DRAWING NO
5.5

JOB NO
15-257-02

S:\Proj2015\257-02 (Design - South Park Loop Pathway Connector)\Drawings\Layout Drawings\PLANVIEW_CROSSINGS.dwg (WILSON ROAD CROSSING) - May 15 2016 01:42:56 pm PLOTTED BY: karichner DWG FORMAT: 19.1

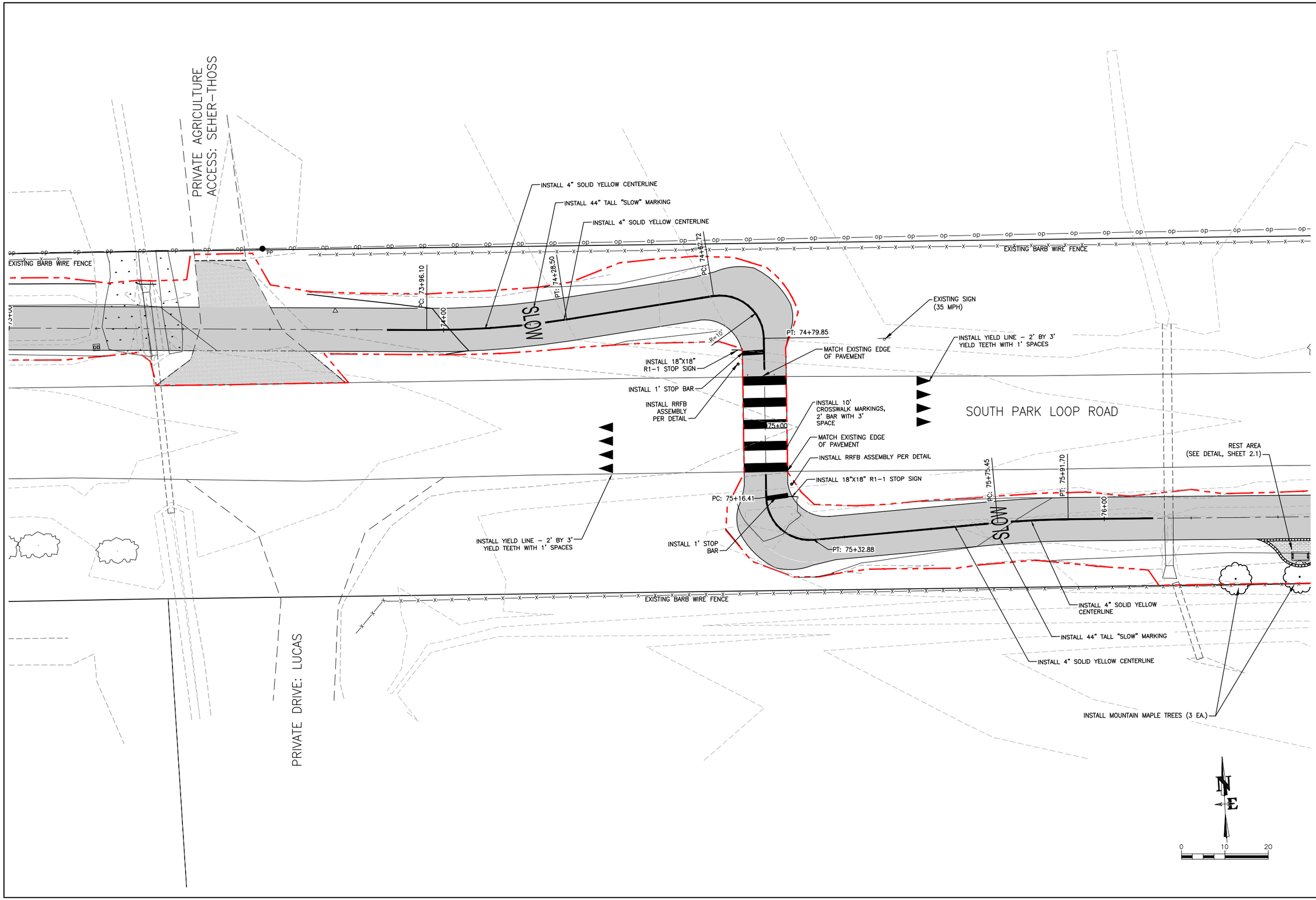

DATE	5/13/2016
SURVEYED	NE
ENGINEERED	DD
DRAWN	DB
CHECKED	DD
APPROVED	DD

REV.

NELSON ENGINEERING
P.O. BOX 1599, JACKSON WYOMING (307) 733-2087

DRAWING TITLE
PLANVIEW OF ROAD CROSSING
SOUTHERN SOUTH PARK LOOP ROAD

JOB TITLE
SOUTH PARK LOOP
CONNECTOR PATHWAY PROJECT
TETON COUNTY, WY

DRAWING NO
5.6

JOB NO
15-257-02

S:\Proj2015\257-02 (Design - South Park Loop Pathway Connector)\Drawings\Layout Drawings\PLANVIEW_CROSSINGS.dwg <SOUTHERN SPLR AT GRADE CROSSING> - May 16 2016 12:27:18 pm PLOTTED BY: karichner DWG FORMAT: 19.1

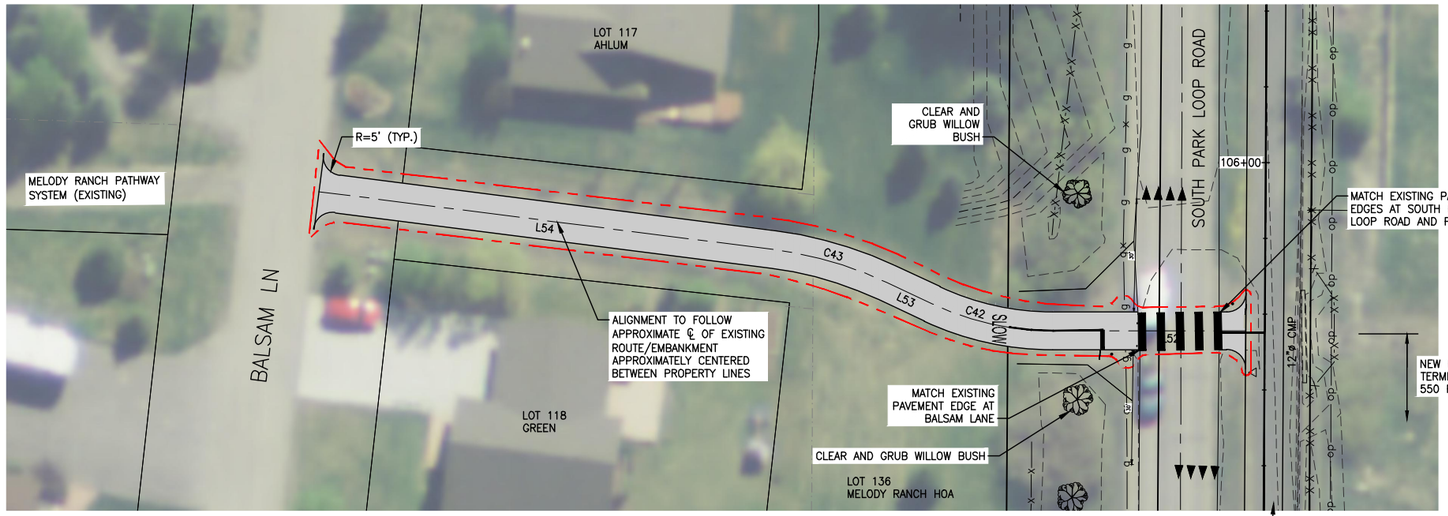

1 / 5.7 MELODY RANCH CROSSING PLAN

0 20 40

CONTRACTOR NOTE:

CAUTION: UNDERGROUND UTILITY LOCATIONS ARE NOT GUARANTEED, NOR IS THERE ANY GUARANTEE THAT ALL EXISTING UTILITIES (WHETHER FUNCTIONAL OR ABANDONED) WITHIN THE PROJECT AREA ARE SHOWN ON THESE DRAWINGS. THE CONTRACTOR SHALL DETERMINE THE EXACT LOCATION OF ALL UNDERGROUND UTILITIES BEFORE STARTING WORK. THE CONTRACTOR SHALL BE RESPONSIBLE FOR ALL DAMAGE RESULTING FROM CONTRACTORS WORK.

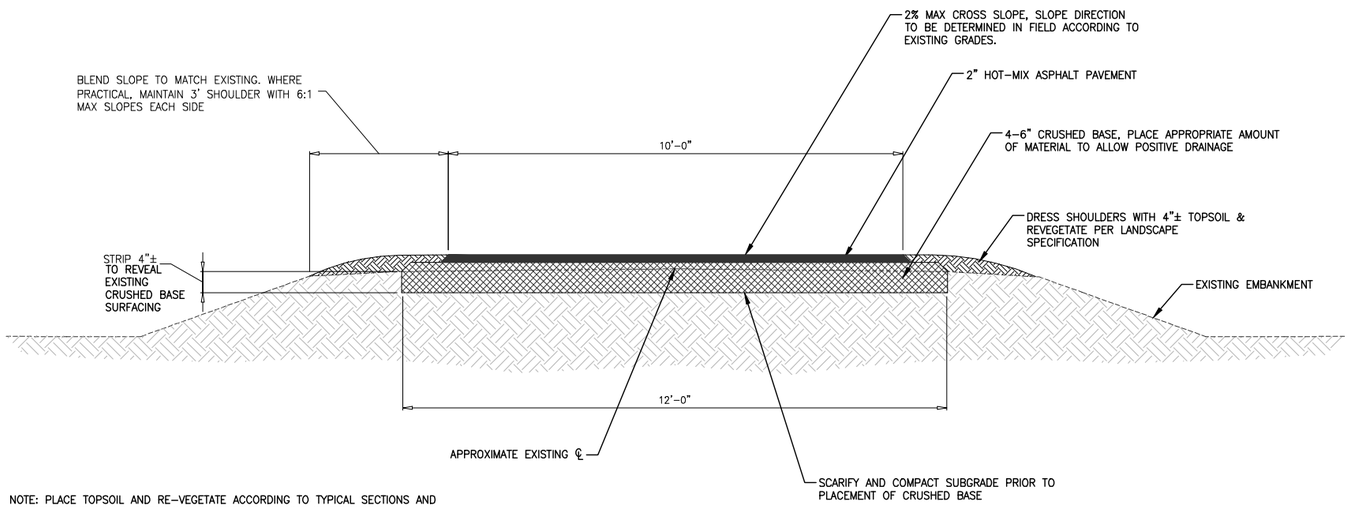

NOTE: PLACE TOPSOIL AND RE-VEGETATE ACCORDING TO TYPICAL SECTIONS AND SPECIFICATIONS IN ALL AREAS WHERE EXISTING GROUND IS DISTURBED

2 / 5.7 MELODY RANCH CROSS SECTION

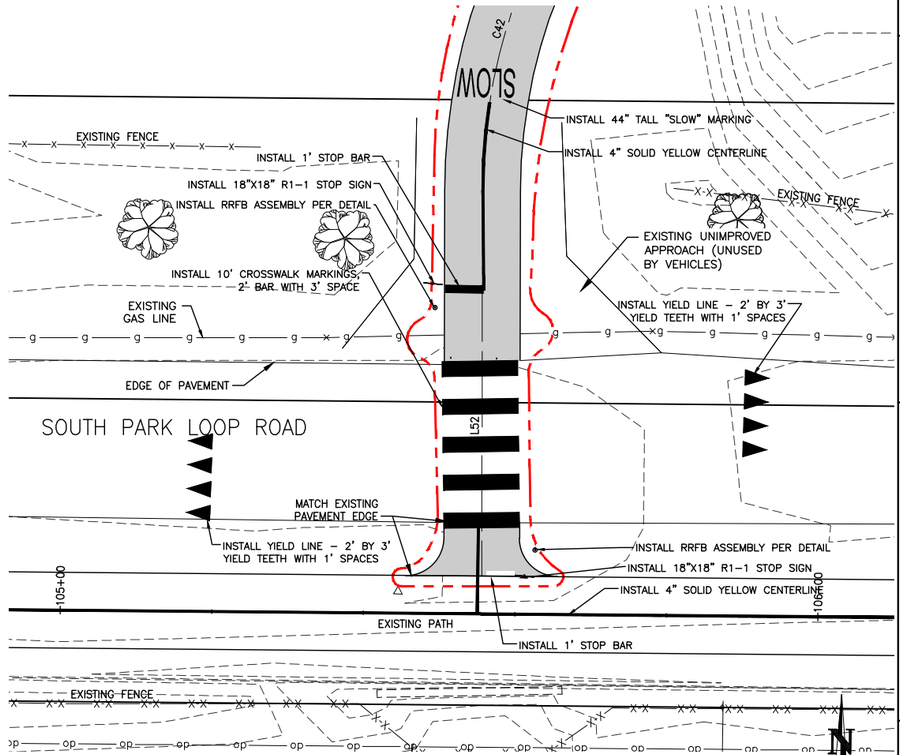

3 / 5.7 CROSSING DETAIL

0 10 20

DATE	5/13/2016	REV.
SURVEYED	NE	
ENGINEERED	DD	
DRAWN	DB	
CHECKED	DD	
APPROVED	DD	

NELSON ENGINEERING
P.O. BOX 1599, JACKSON WYOMING (307) 733-2087

DRAWING TITLE: PLAN DETAIL VIEW
MELODY RANCH SUBDIVISION CONNECTION

JOB TITLE: SOUTH PARK LOOP CONNECTOR PATHWAY PROJECT
TETON COUNTY, WY

DRAWING NO 5.7

JOB NO 15-257-02

S:\Proj\2015\257-02 (Design - South Park Loop Pathway Connector)\Drawings\Layout Drawings\MELODY CONNECTION.dwg (MELODY CROSSING - May 16, 2016 11:21:15 am PLOTTED BY karichner DWG FORMAT: 191

IRRIGATION NOTES

1. The irrigation system shall be operational prior to plant installation or temporary irrigation measures shall be provided in the interim. The method of temporary irrigation shall be approved by the Engineer prior to installing any plant material.
2. The permanent irrigation system shall be a design–build amendment to the existing irrigation system on Munger View Park property. Information and assumptions include:

   Controller: Rainbird Site Sat 24 Maxicom (Existing)

   Control Wire: Assume new control wire will be necessary to accommodate proposed zone(s)

   Pump: Existing submersible well pump, provides approximately 50 gpm @ 60 psi,. Assume pump is adequate for proposed zones(s).

   Main Line: Assume 1 1/2" PVC exists, connect to irrigation mainline in location shown on plan.

3. Contractor must verify existing irrigation system design and control scheme prior to design of proposed irrigation system. Any modifications to the bid assumptions shall be identified prior to final irrigation design acceptance. Contractor to submit irrigation system extension design for review and approval.
4. Trenching disturbances shall be no greater than 12" wide along the length of trench,. Disturbance shall be re–vegetated with native seed mix.
5. All trees and installed willows to be drip irrigated in along the length that the irrigation system is shown as proposed. Re–vegitation areas associated with trenching activities are not require to receive supplemental irrigation.
6. Design shall include an appropriate sleeve under South Park Loop Road and the sleeve shall be bored by a reputable company with similar boring experience. Bore shall comply with the approved Utility permit from Teton County Road and Levee (to be obtained by Owner).
7. The irrigation layout shown is only diagrammatic. All piping, valves, drip lines, control wire etc. necessary to property irrigate the trees and willows is the responsibility of the Contractor. Contractor must receive Engineer approval of irrigation design prior to trenching or installation. Any changes to the approved design will be shown on required as–built drawings.
8. It is the responsibility of the Contractor to become familiar with the site and existing irrigation system. Contractor shall coordinate their work with Engineer for the correct siting of sleeving under road and to ensure a workable system.
9. Install materials and equipment per specifications and these plans and the approved design. Minimum depth of invert mainline is 36", to invert lateral is 24". All valve connections to mainlines shall be saddled, with saddle in vertical position. All valves shall have bronze unions on both sides. A common trench shall be used for two or more adjacent lines, allowing a minimum 4" clearance between each. Use Teflon tape on all pipe threads, swing joints, and valve assemblies. Drip lines shall be Netafim drip irrigation rings or equal and and be concentric around trees at 4 and 6 foot diameter or as needed. Install 1 inch inline drip filter at outlet of automatic valve.
10. All valves shall be installed in "Amtek" or "Brooks" valve boxes, "Jumbos" where necessary. All valve boxes shall be installed in ground cover and shrub beds whenever possible. Remote control valves shall be installed in valve boxes, flush to finished grade. All valve boxes shall be placed on four cinder blocks, one at each corner. Each valve box shall be centered around the valve with depth to valve bottom 18". Valve boxes shall be sited a minimum of 2 feet from adjacent paving or walls, and shall be separated from mainlines and other valve boxes by a minimum of 3 feet.
11. Contractor shall flush and adjust all new irrigation for optimum performance. This shall include throttling the flow control system at each valve if necessary to obtain optimum operating pressure for each system, in accordance to manufacturer's recommendations.
12. Contractor shall backfill, water settlement as per specifications, and re–grade site to finished grade conditions; smooth and prepped for seeding, sodding, or planting.

N

0 20 40

LEGEND

= NEW COTTONWOOD

= WILLOW TRANSPLANT

IR = IRRIGATION SYSTEM

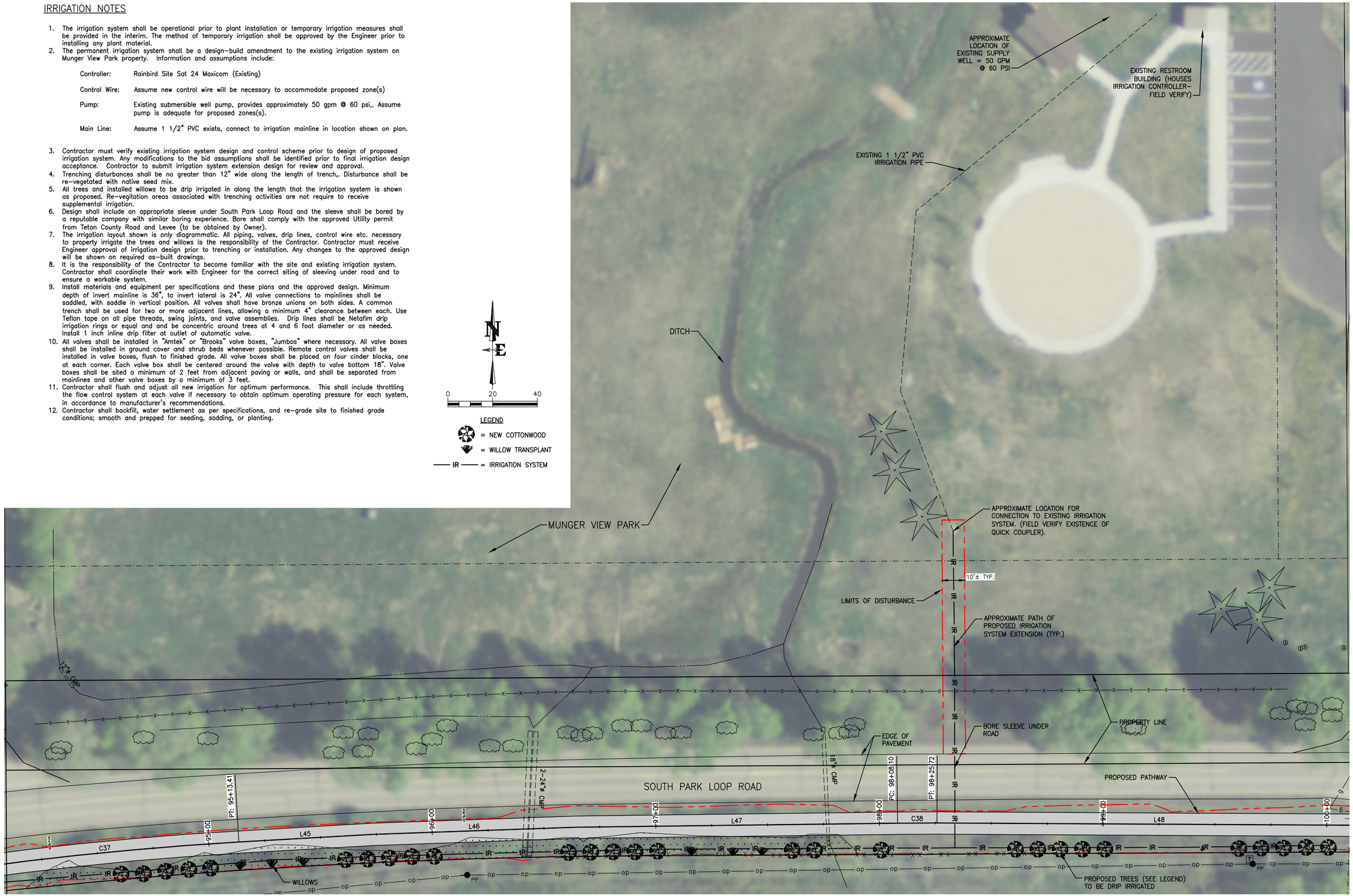

TREE MITIGATION: SECTION 1

DATE	5/13/2016
SURVEYED	NE
ENGINEERED	DD
DRAWN	DB
CHECKED	DD
APPROVED	DD

REV.

NELSON ENGINEERING
P.O. BOX 1599, JACKSON WYOMING (307) 733–2087

DRAWING TITLE
TREE MITIGATION PLAN

JOB TITLE
SOUTH PARK LOOP
CONNECTOR PATHWAY PROJECT
TETON COUNTY, WY

DRAWING NO 6.0

JOB NO 15–257–02

S:\Proj\2015\257–02 (Design – South Park Loop Pathway Connector\Drawings\SPLP PATH DESIGN.dwg 6.0 TREE MITIGATION – May 16, 2016 11:38:19 am PLOTTED BY: karichner DWG FORMAT: 191

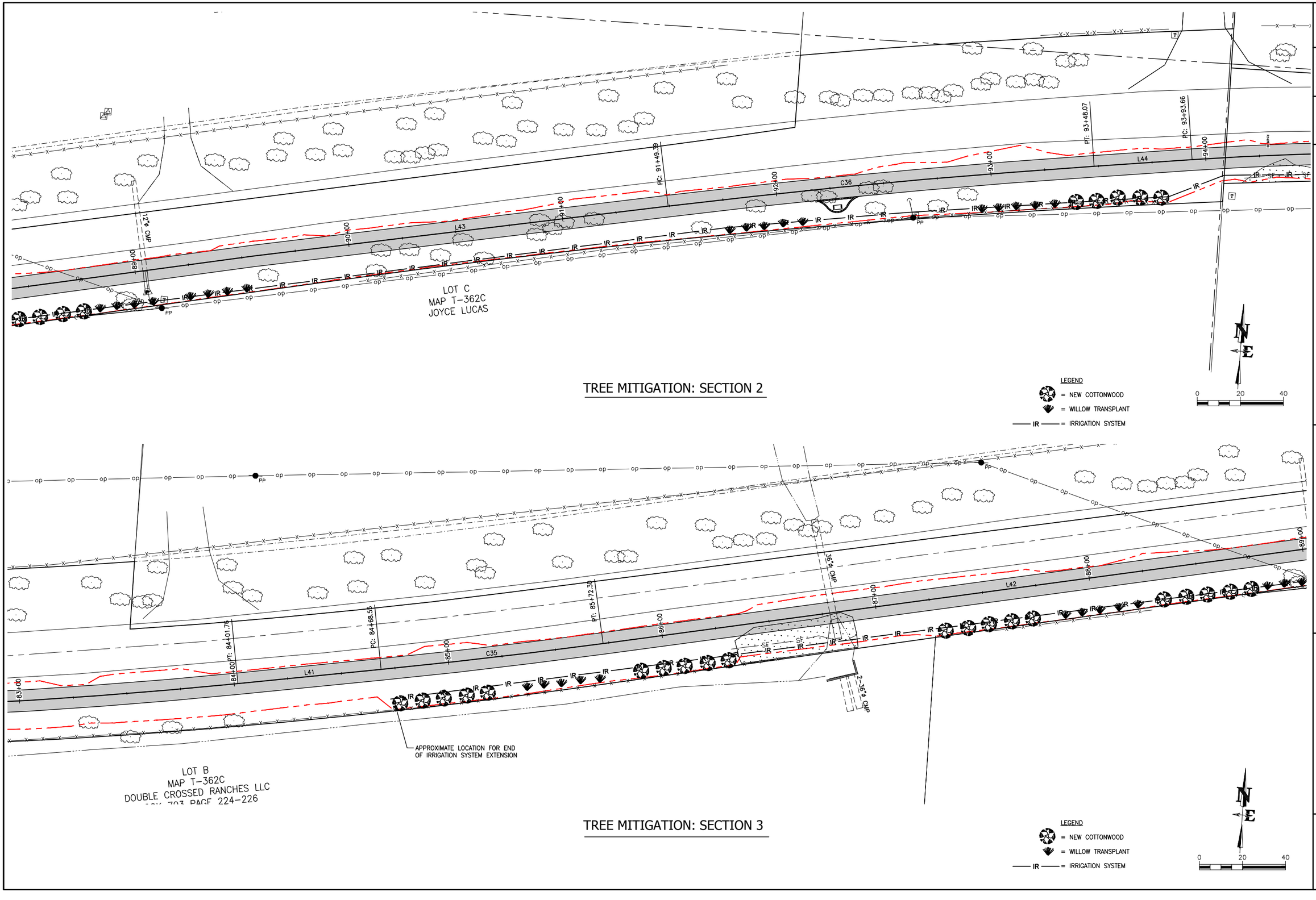

REV.	DATE	
	5/13/2016	
	SURVEYED	NE
	ENGINEERED	DD
	DRAWN	DB
	CHECKED	DD
	APPROVED	DD

NELSON ENGINEERING
P.O. BOX 1599, JACKSON WYOMING (307) 733-2087

DRAWING TITLE
TREE MITIGATION PLAN

JOB TITLE
SOUTH PARK LOOP
CONNECTOR PATHWAY PROJECT
TETON COUNTY, WY

DRAWING NO 6.1

JOB NO 15-257-02

S:\Proj\2015\257-02 (Design - South Park Loop Pathway Connector)\Drawings\SPLP PATH DESIGN.dwg 6.1 - TREE MITIGATION - May 16, 2016 11:32:00 am PLOTTED BY kurtchner ANSI FORMAT: 151

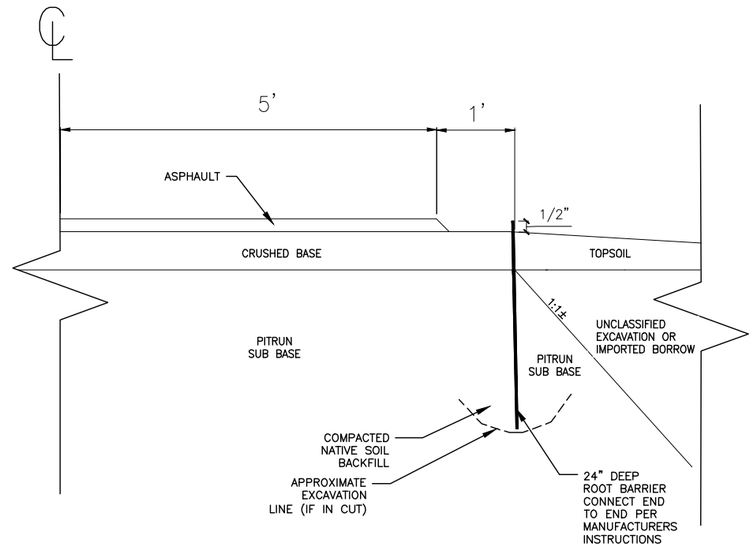

1 / 6.2 ROOT BARRIER DETAIL

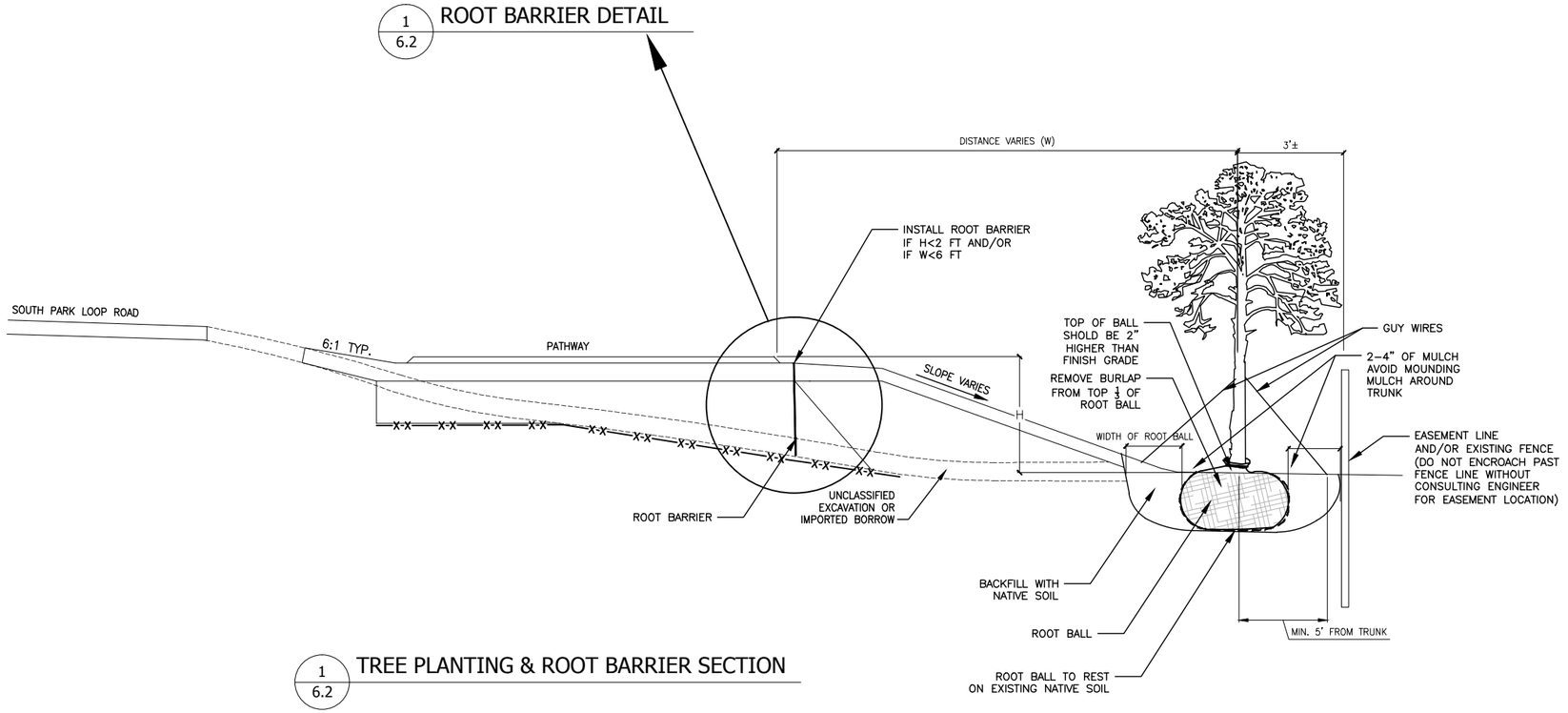

1 / 6.2 TREE PLANTING & ROOT BARRIER SECTION

TREE PLANTING SPECIFICATIONS:

1. MARK PLANTING AREA FOR TREE AND SHRUB PITS THAT IS THREE TIMES THE DIAMETER OF THE ROOT BALL. DO NOT PROCEED WITH PLANTING UNTIL THE BED AND PIT LOCATIONS ARE APPROVED BY THE ENGINEER.
2. LOOSEN SOIL WITH ROTOTILLER OR SHOVELS TO A DEPTH OF TWELVE INCHES. ADD ORGANIC MATTER, DISTRIBUTED UNIFORMLY WITHIN PLANTING BED.
3. IN THE CENTER OF THE PREPARED AREA, EXCAVATE A SHALLOW HOLE FOR THE ROOT BALL, SO THAT IT SITS ON SOLID SUBSOIL. APPLY FERTILIZER DIRECTLY TO BOTTOM OF PIT.
4. SET PLANT IN CENTER OF PIT, PLUMB AND STRAIGHT, AND AT SUCH A LEVEL THAT AFTER SETTLEMENT THE TOP OF THE ROOT COLLAR IS EVEN WITH ADJACENT FINISHED GRADE. REMOVE BURLAP, ROPES, AND ALL WIRE. GENTLY PACK SOIL AROUND PLANT AND LIGHTLY WATER, TO PROMOTE FURTHER SOIL CONSOLIDATION.
5. APPLY TWO INCH THICK LAYER OF MULCH.
6. PRUNE EACH PLANT WITH CLEAN, SHARP TOOLS TO REMOVE SUCKERS, AND BROKEN, BADLY BRUISED OR DEAD BRANCHES. WRAP TREE TRUNKS WITH TUBEX, OR EQUIVALENT TRANSLUCENT MATERIAL.
7. GUY TREES WITH TWO WIRES ANCHORED SECURELY TO STEEL POSTS. DIRECTLY OPPOSITE EACH OTHER, NOT LESS THAN 5 FEET FROM THE TRUNK. PROTECT THE TREE FROM DIRECT CONTACT WITH THE WIRES. REMOVE POSTS AND WIRES AFTER ONE YEAR.
8. COMMENCE WATERING AND MAINTENANCE OF PLANTINGS UNTIL SUBSTANTIAL COMPLETION.
9. CORRECT DEFECTIVE WORK AS SOON AS IT BECOMES APPARENT AND AS WATER AND SEASON PERMIT.

DATE	5/13/2016	REV.
SURVEYED	NE	
ENGINEERED	DD	
DRAWN	DB	
CHECKED	DD	
APPROVED	DD	

NELSON ENGINEERING
P.O. BOX 1599, JACKSON WYOMING (307) 733-2087

DRAWING TITLE
TREE MITIGATION PLAN DETAILS

JOB TITLE
SOUTH PARK LOOP CONNECTOR PATHWAY PROJECT
TETON COUNTY, WY

DRAWING NO 6.2

JOB NO 15-257-02

S:\Proj2015\257-02 (Design - South Park Loop Pathway Connector)\Drawings\SPLR PATH DESIGN.dwg (TREE DETAILS) - May 15 2016 01:45:39 pm PLOTTED BY: karichner DWG FORMAT: 191

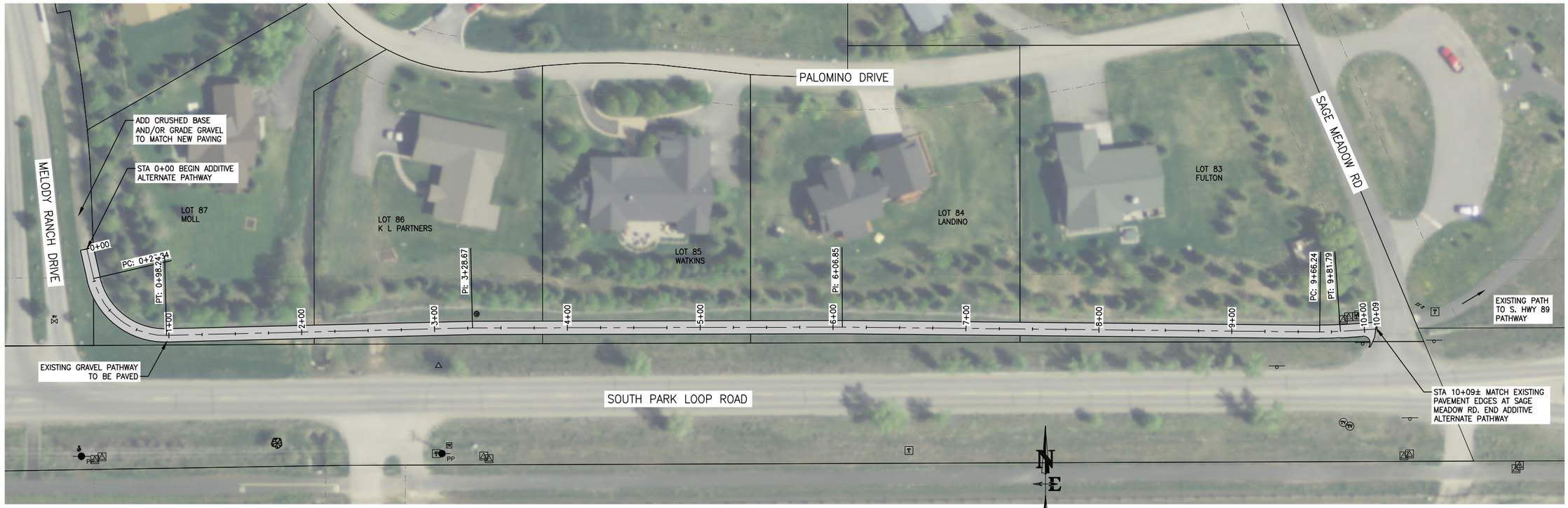

1 / 7.0 ADDITIVE ALTERNATE SITE PLAN

CAUTION: UNDERGROUND UTILITY LOCATIONS ARE NOT GUARANTEED, NOR IS THERE ANY GUARANTEE THAT ALL EXISTING UTILITIES (WHETHER FUNCTIONAL OR ABANDONED) WITHIN THE PROJECT AREA ARE SHOWN ON THESE DRAWINGS. THE CONTRACTOR SHALL DETERMINE THE EXACT LOCATION OF ALL UNDERGROUND UTILITIES BEFORE STARTING WORK. THE CONTRACTOR SHALL BE RESPONSIBLE FOR ALL DAMAGE RESULTING FROM CONTRACTORS WORK.

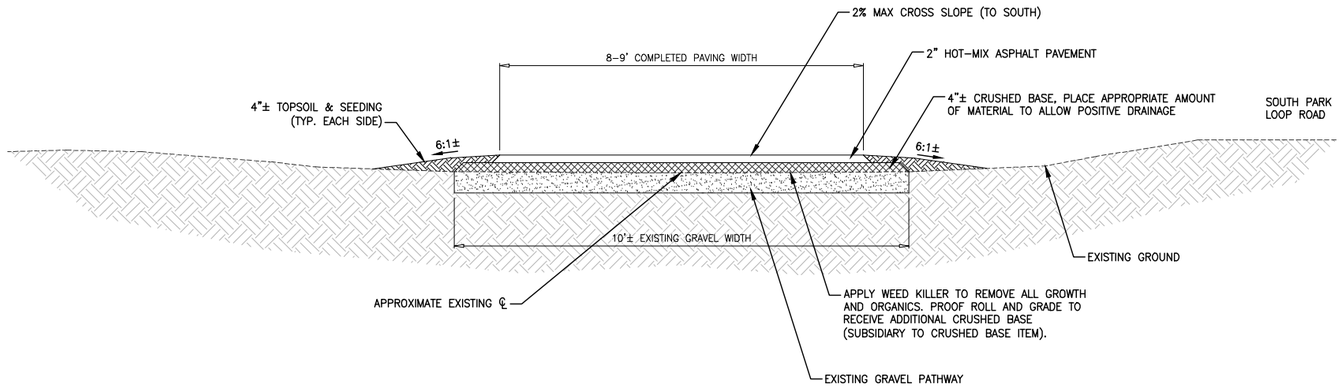

NOTE: PLACE TOPSOIL AND RE-VEGETATE ACCORDING TO TYPICAL SECTIONS AND SPECIFICATIONS IN ALL AREAS WHERE EXISTING GROUND IS DISTURBED

2 / 7.0 ADDITIVE ALTERNATE PATH SECTION

N.T.S.

DATE	5/13/2016
SURVEYED	NE
ENGINEERED	DD
DRAWN	DB
CHECKED	DD
APPROVED	DD

REV.

NELSON ENGINEERING
P.O. BOX 1599, JACKSON WYOMING (307) 733-2087

DRAWING TITLE
ADDITIVE BID ALTERNATE PATHWAY
MELODY RANCH PAVEMENT EXTENSION
HWY 89 TO ENTRANCE

JOB TITLE
SOUTH PARK LOOP
CONNECTOR PATHWAY PROJECT
TETON COUNTY, WY

DRAWING NO 7.0

JOB NO 15-257-02

S:\Proj2015\257-02 CDesign - South Park Loop Pathway Connector\Drawings\Layout Drawings\MELODY CONNECTION.dwg <MELODY EAST CONNECTION> - May 15 2016 01:46:31 pm PLOTTED BY: karichner DWG FORMAT: 191

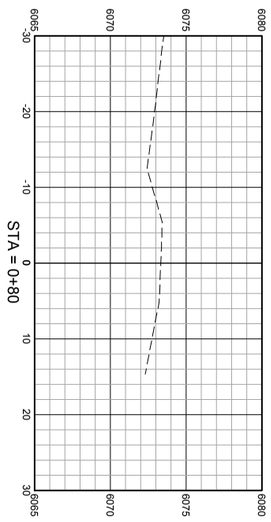

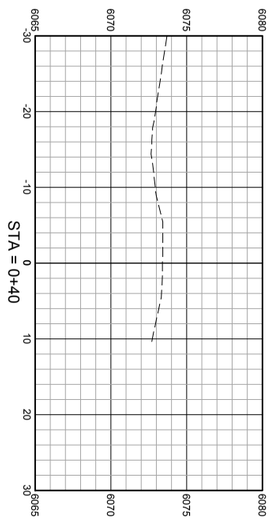

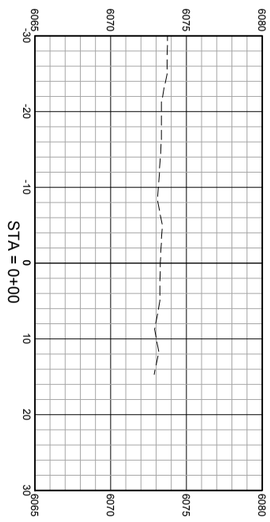

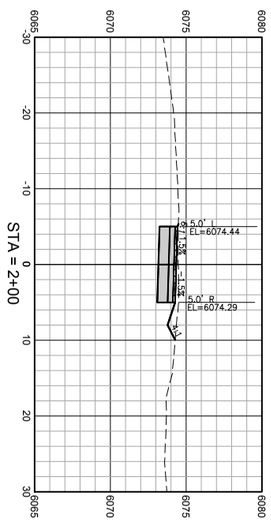

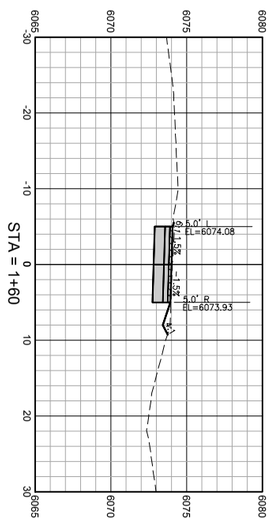

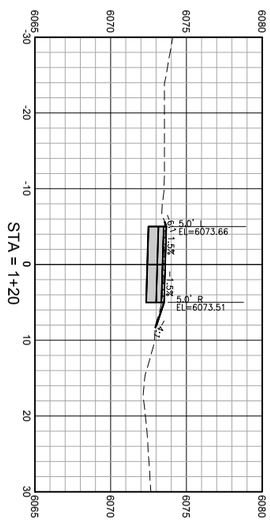

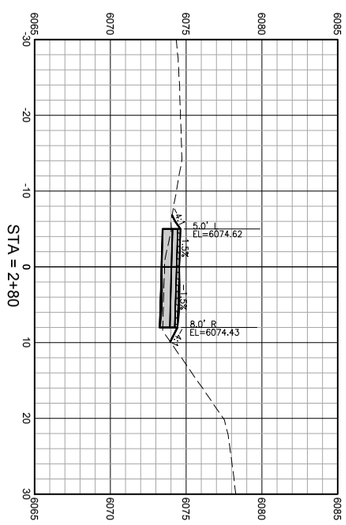

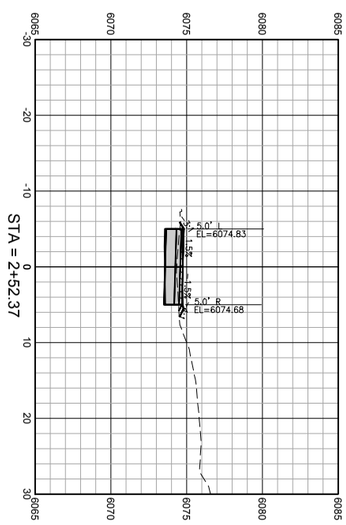

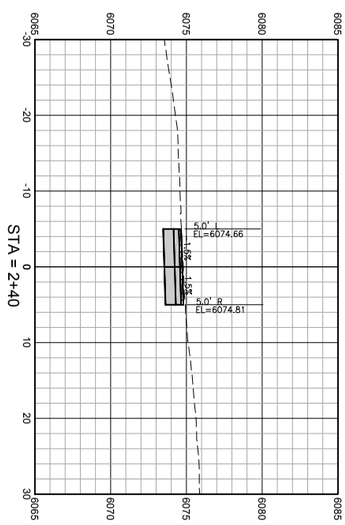

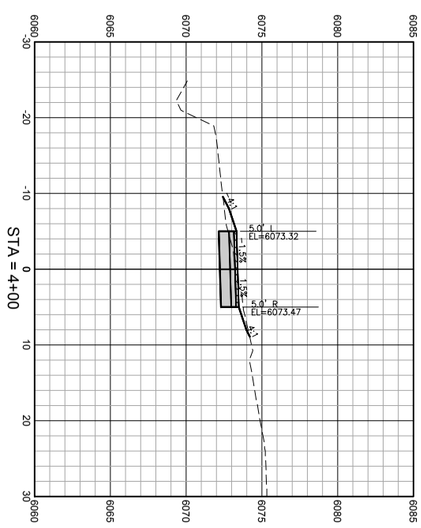

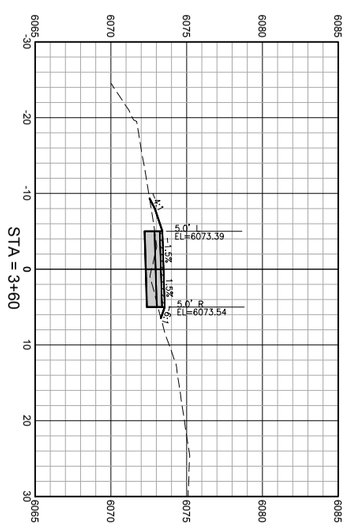

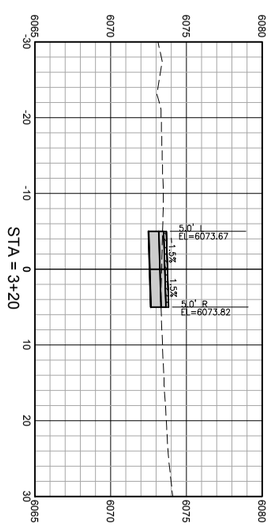

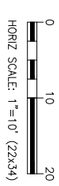

DRAWING NO: X1	JOB TITLE: SOUTH PARK LOOP CONNECTOR PATHWAY PROJECT TETON COUNTY, WY	DRAWING TITLE: CROSS SECTIONS	NELSON ENGINEERING P.O. BOX 1599, JACKSON WYOMING (307) 733-2087	DATE: 5/13/2016	REV.
JOB NO: 15-257-02				SURVEYED: NE	
				ENGINEERED: DD	
				DRAWN: DB	
				CHECKED: DD	
				APPROVED: DD	

S:\Proj2015\257-02 (Design - South Park Loop Pathway Connector)\Drawings\Align & Grading.dwg <Section Sheet - 2> - May 13 2016 08:47:43 pm PLOTTED BY: korichner DWG FORMAT: 191

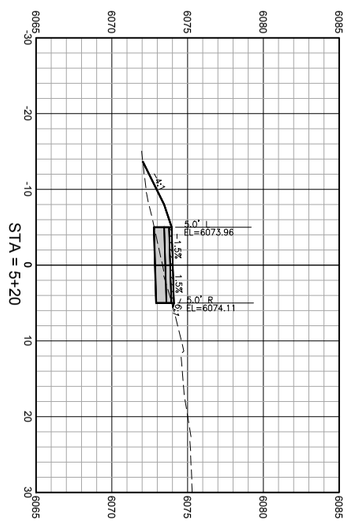

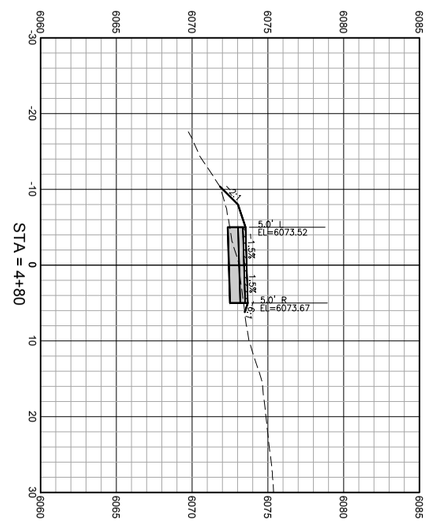

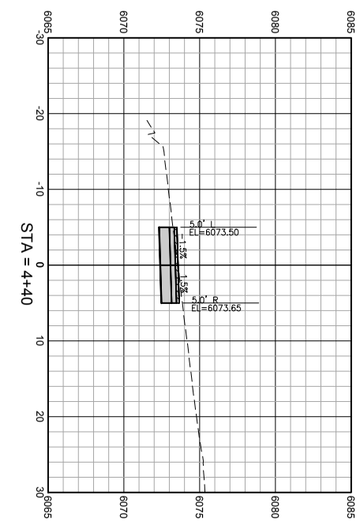

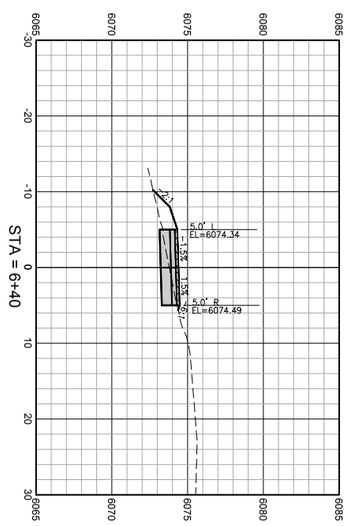

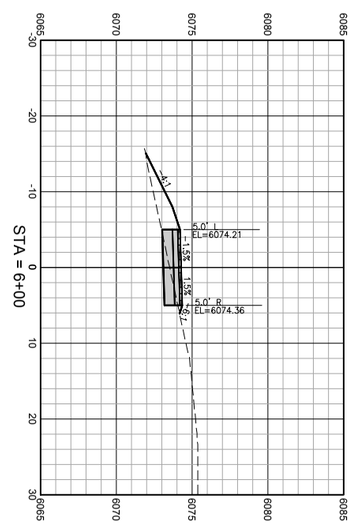

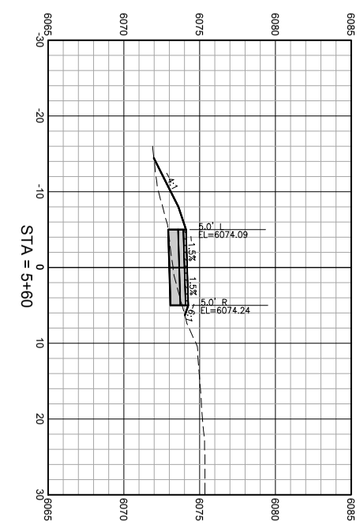

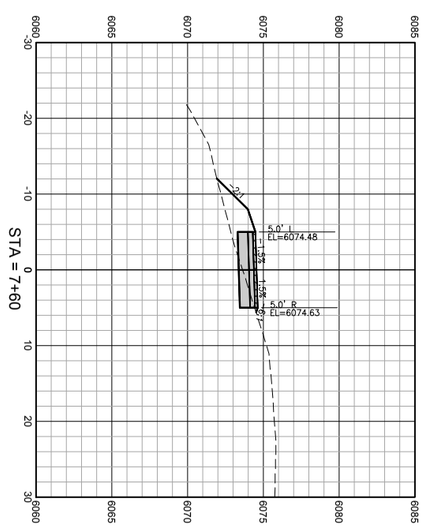

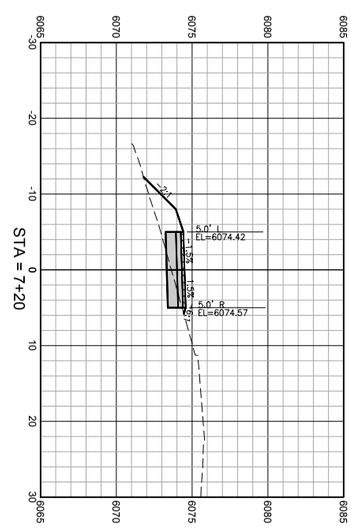

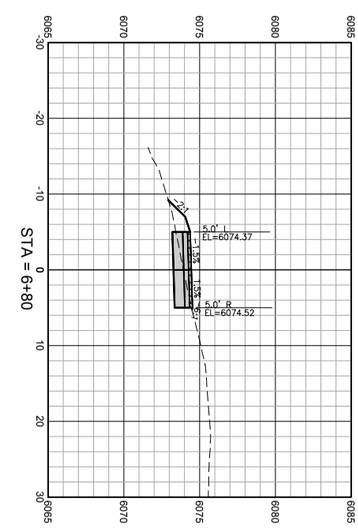

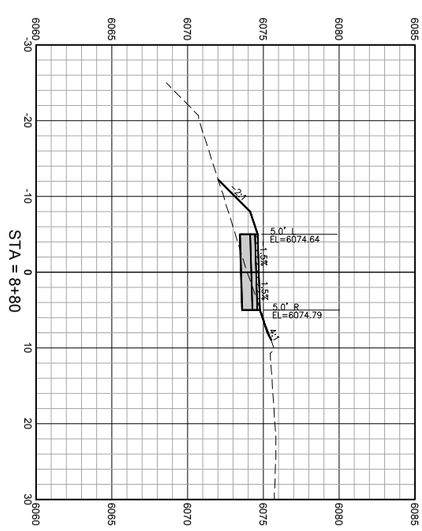

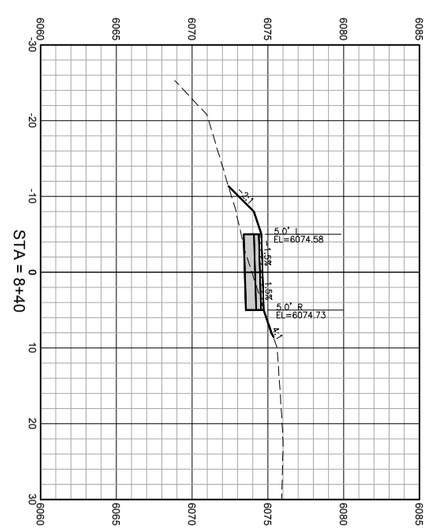

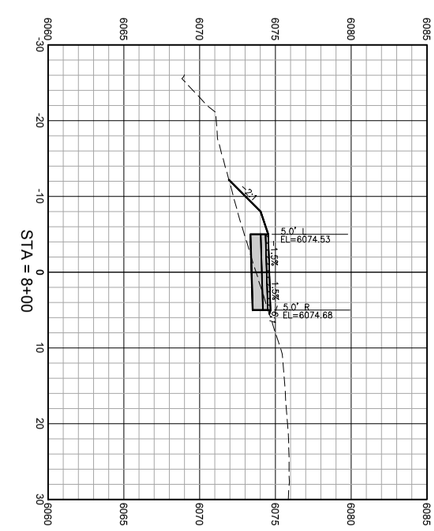

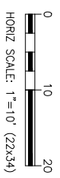

DRAWING NO: X2	JOB TITLE: SOUTH PARK LOOP CONNECTOR PATHWAY PROJECT TETON COUNTY, WY	DRAWING TITLE: CROSS SECTIONS	NELSON ENGINEERING P.O. BOX 1599, JACKSON WYOMING (307) 733-2087	DATE: 5/13/2016	REV.
JOB NO: 15-257-02				SURVEYED: NE	
				ENGINEERED: DD	
				DRAWN: DB	
				CHECKED: DD	
				APPROVED: DD	

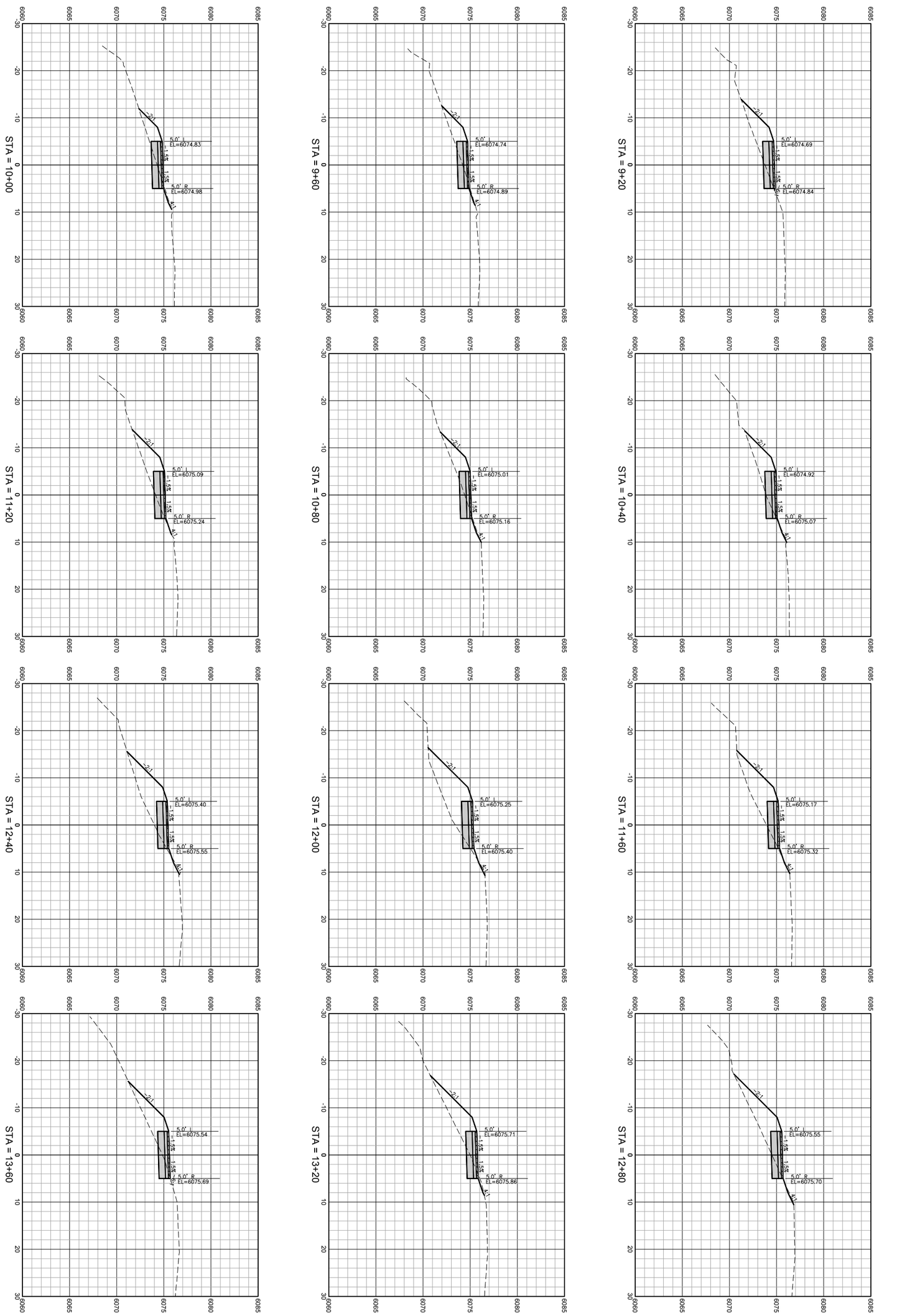

HORIZ SCALE: 1"=10' (22x34)

DRAWING NO: X3	JOB TITLE: SOUTH PARK LOOP CONNECTOR PATHWAY PROJECT TETON COUNTY, WY	DRAWING TITLE: CROSS SECTIONS	NELSON ENGINEERING P.O. BOX 1599, JACKSON WYOMING (307) 733-2087	DATE: 5/13/2016	REV.
JOB NO: 15-257-02				SURVEYED: NE	
				ENGINEERED: DD	
				DRAWN: DB	
				CHECKED: DD	
				APPROVED: DD	

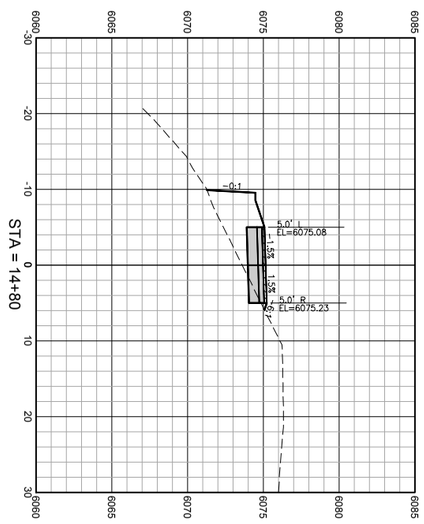

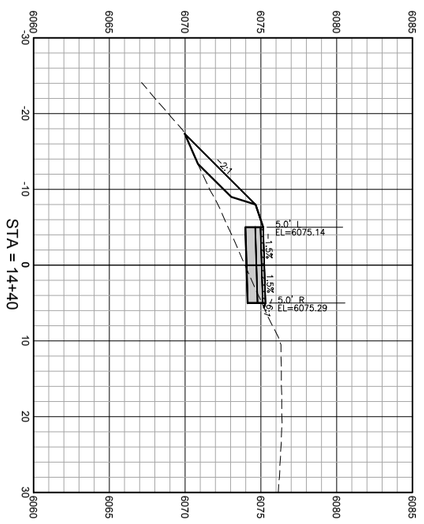

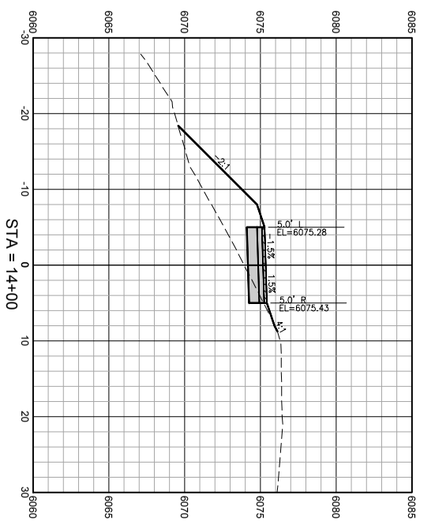

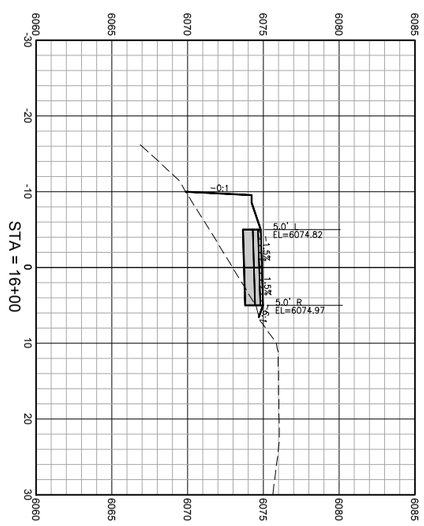

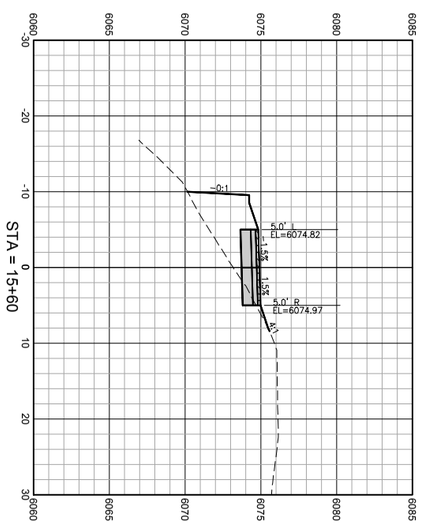

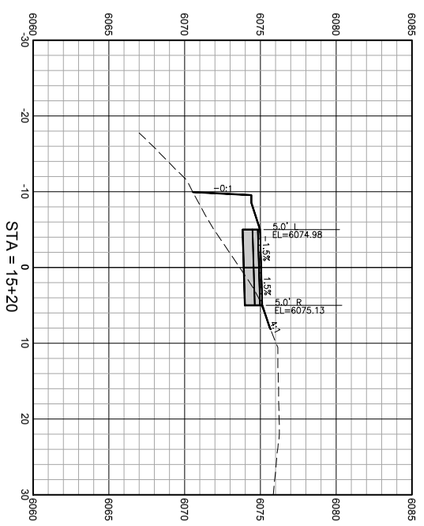

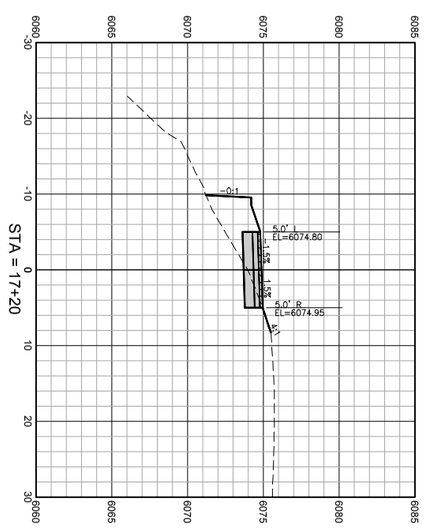

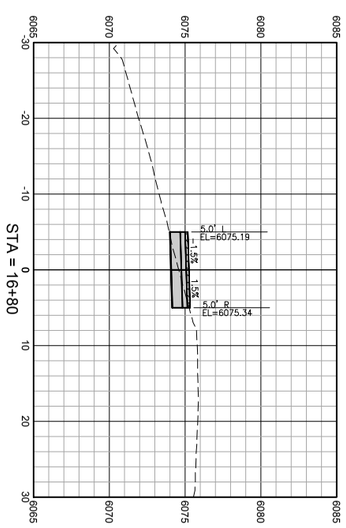

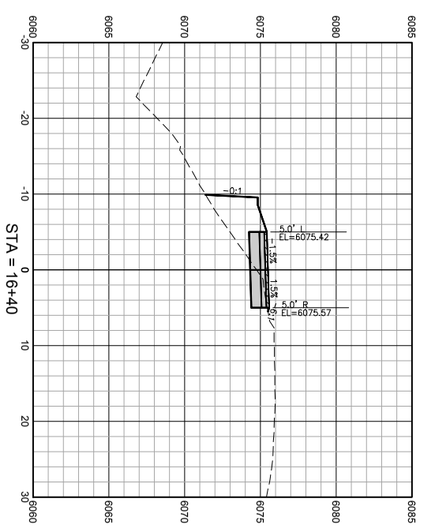

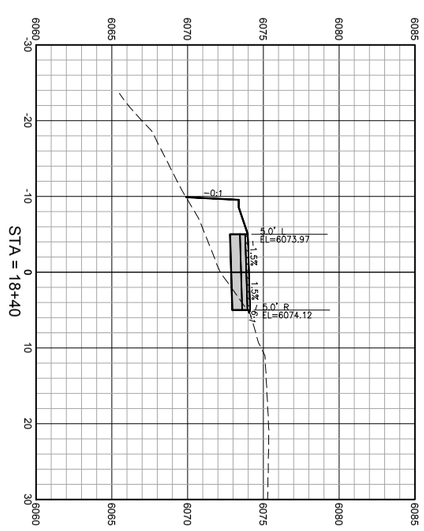

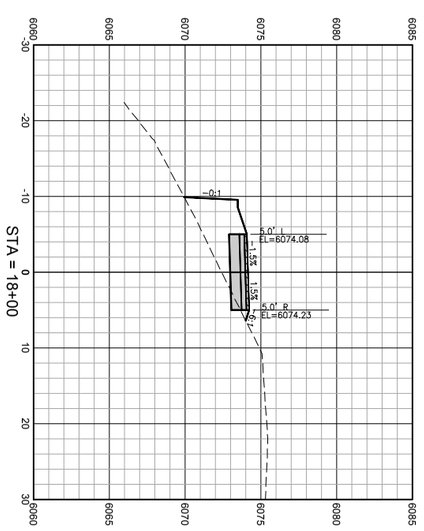

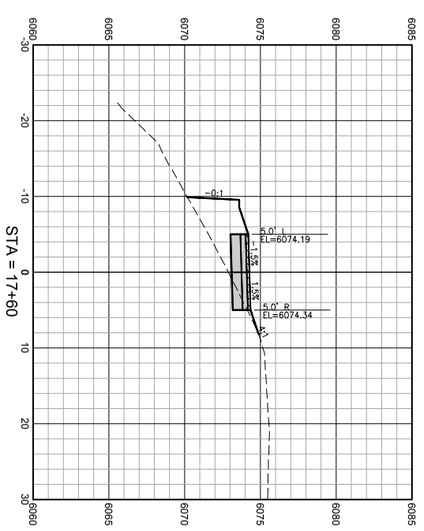

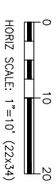

DRAWING NO	JOB TITLE	DRAWING TITLE			
X4	SOUTH PARK LOOP	CROSS SECTIONS	NELSON ENGINEERING	DATE	5/13/2016
JOB NO	CONNECTOR PATHWAY PROJECT		P.O. BOX 1599, JACKSON WYOMING (307) 733-2087	SURVEYED	NE
15-257-02	TETON COUNTY, WY			ENGINEERED	DD
				DRAWN	DB
				CHECKED	DD
				APPROVED	DD

REV.

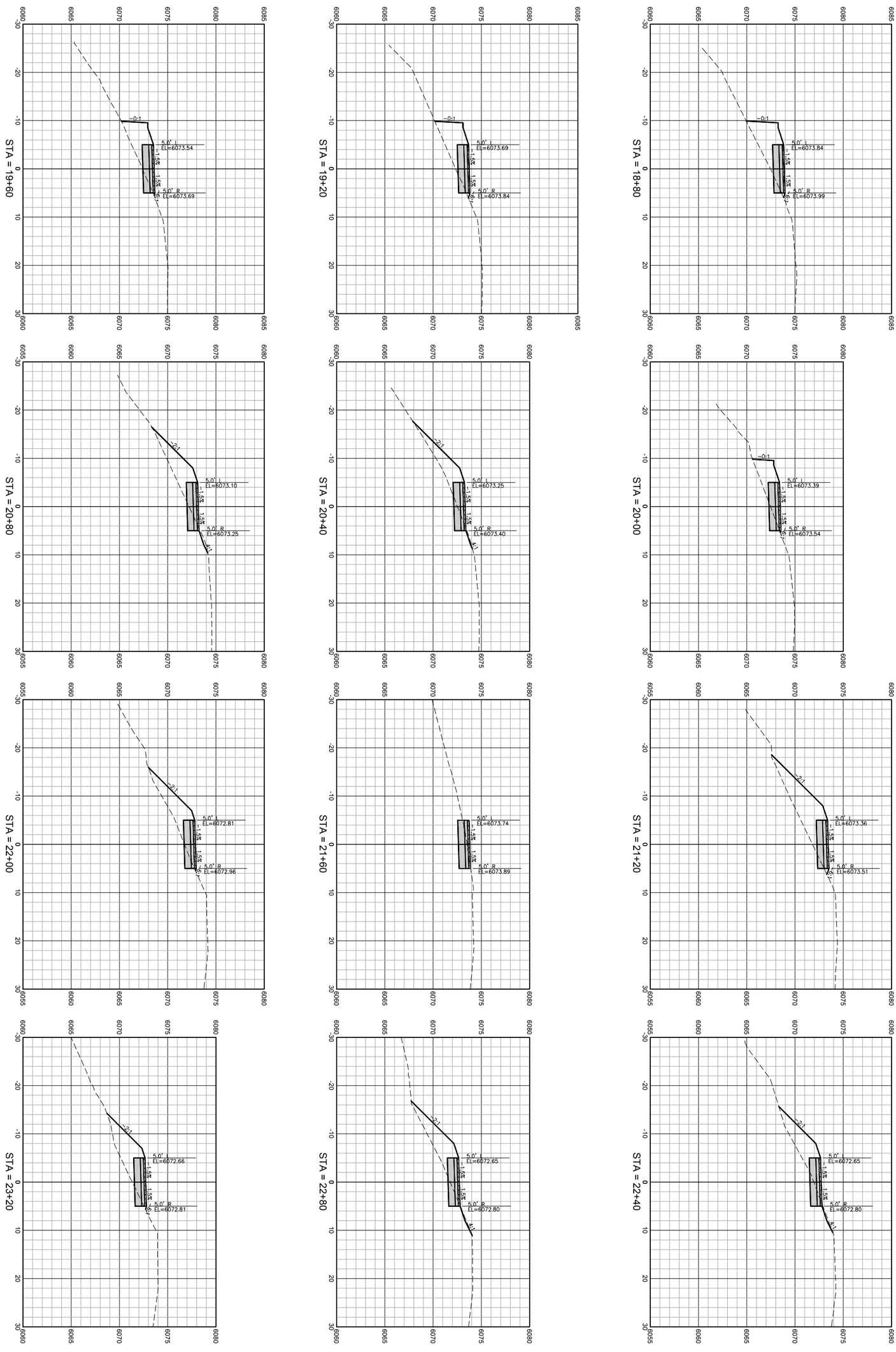

DRAWING NO: X5	JOB TITLE: SOUTH PARK LOOP CONNECTOR PATHWAY PROJECT TETON COUNTY, WY	DRAWING TITLE: CROSS SECTIONS	NELSON ENGINEERING P.O. BOX 1599, JACKSON WYOMING (307) 733-2087	DATE: 5/13/2016	REV.
JOB NO: 15-257-02				SURVEYED: NE	
				ENGINEERED: DD	
				DRAWN: DB	
				CHECKED: DD	
				APPROVED: DD	

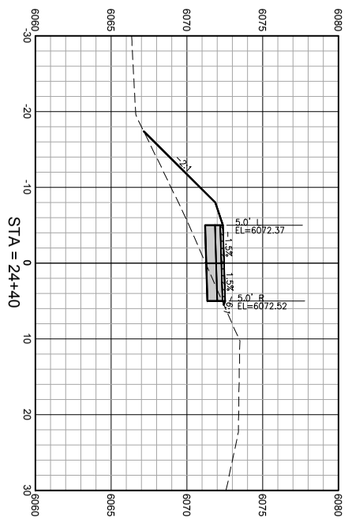

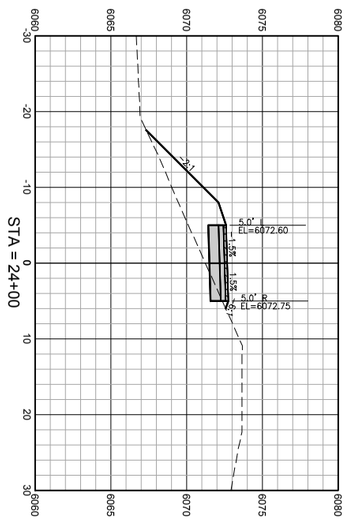

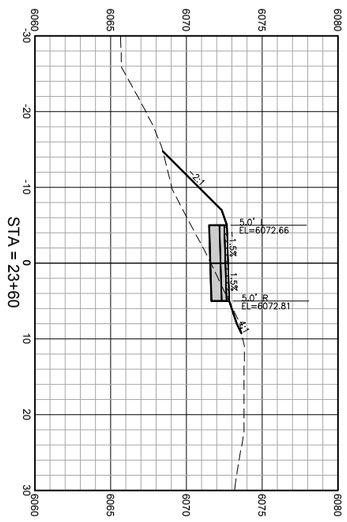

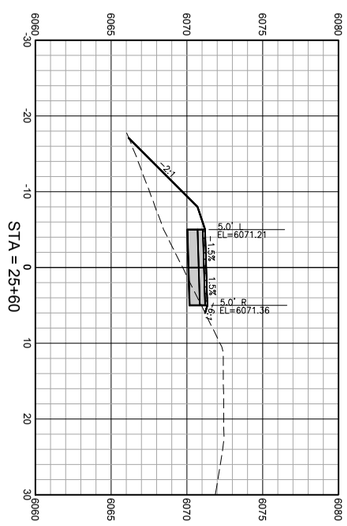

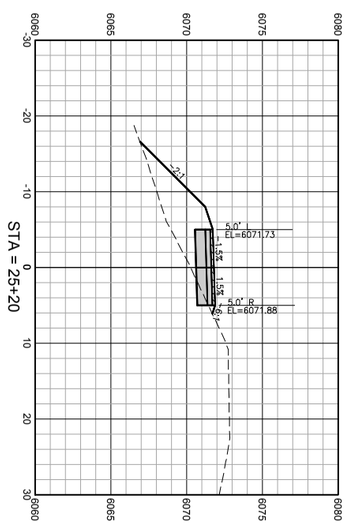

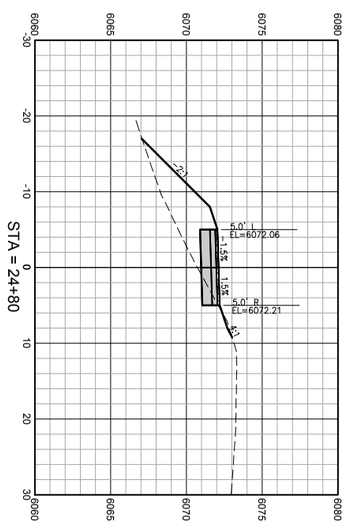

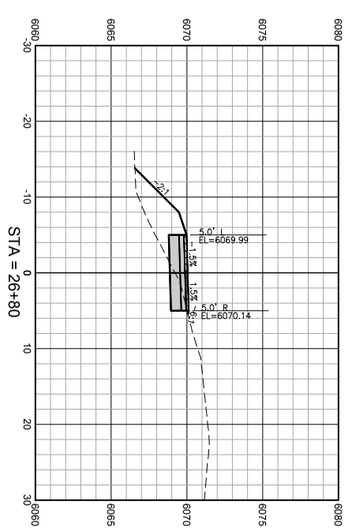

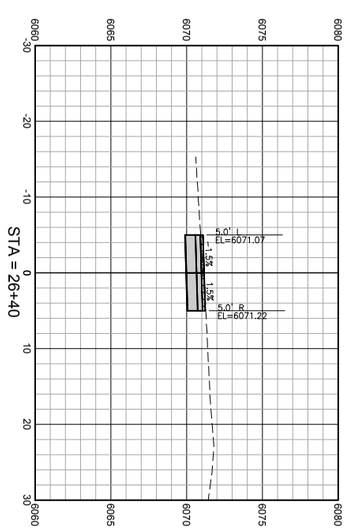

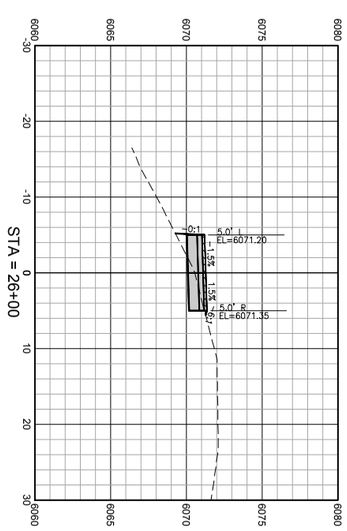

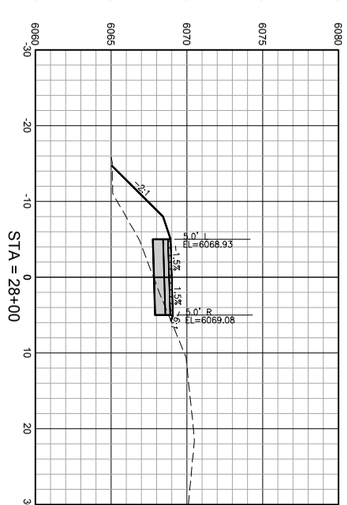

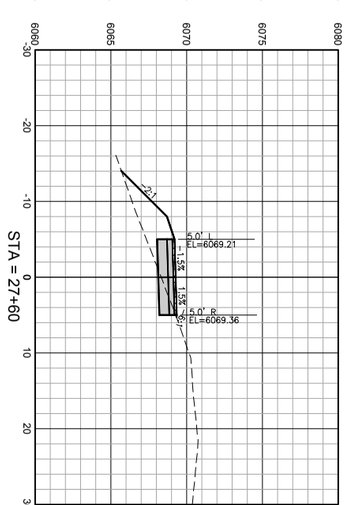

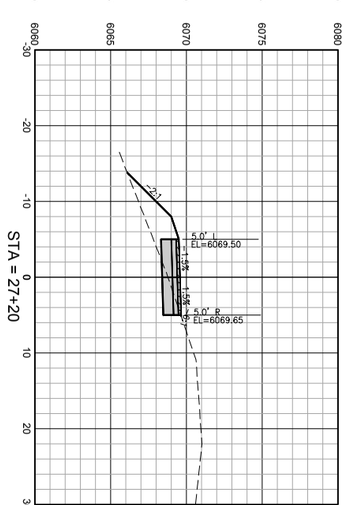

HORIZ SCALE: 1"=10' (22x34)

DRAWING NO: X6	JOB TITLE: SOUTH PARK LOOP CONNECTOR PATHWAY PROJECT TETON COUNTY, WY	DRAWING TITLE: CROSS SECTIONS	NELSON ENGINEERING P.O. BOX 1599, JACKSON WYOMING (307) 733-2087	DATE: 5/13/2016	REV.
JOB NO: 15-257-02				SURVEYED: NE	
				ENGINEERED: DD	
				DRAWN: DB	
				CHECKED: DD	
				APPROVED: DD	

S:\Proj2015\257-02 (Design - South Park Loop Pathway Connector)\Drawings\Align & Grading.dwg <Section Sheet - 7> - May 13 2016 08:48:58 pm PLOTTED BY: korichner DWG FORMAT: 191

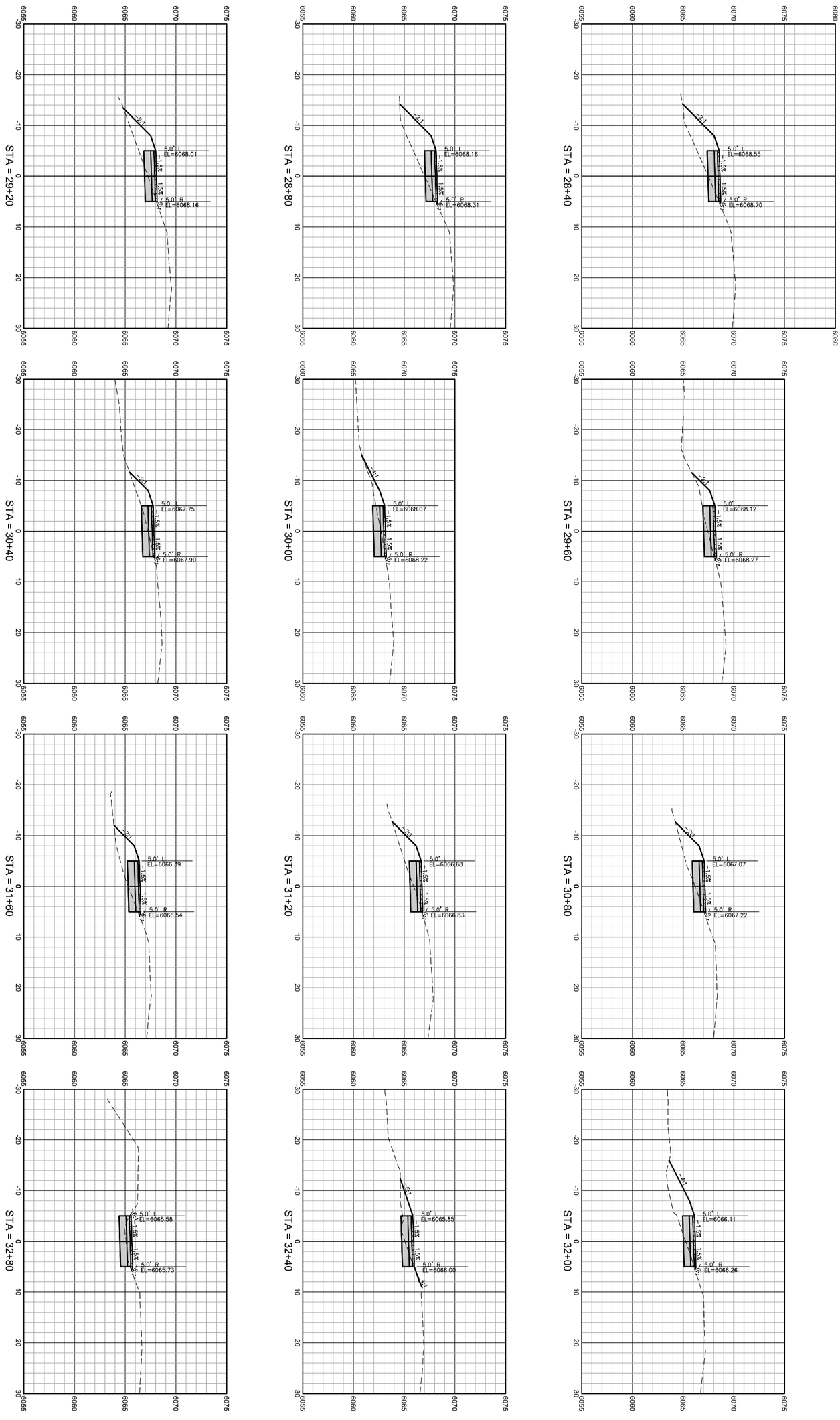

DRAWING NO: X7	JOB TITLE: SOUTH PARK LOOP CONNECTOR PATHWAY PROJECT TETON COUNTY, WY	DRAWING TITLE: CROSS SECTIONS	NELSON ENGINEERING P.O. BOX 1599, JACKSON WYOMING (307) 733-2087	DATE: 5/13/2016	REV.
JOB NO: 15-257-02				SURVEYED: NE	
				ENGINEERED: DD	
				DRAWN: DB	
				CHECKED: DD	
				APPROVED: DD	

S:\Proj2015\257-02 (Design - South Park Loop Pathway Connector)\Drawings\Align & Grading.dwg <Section Sheet - 8> - May 13 2016 01:49:13 pm PLOTTED BY: karichner DWG FORMAT: 191

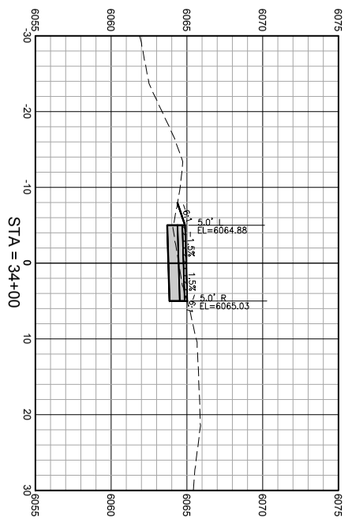

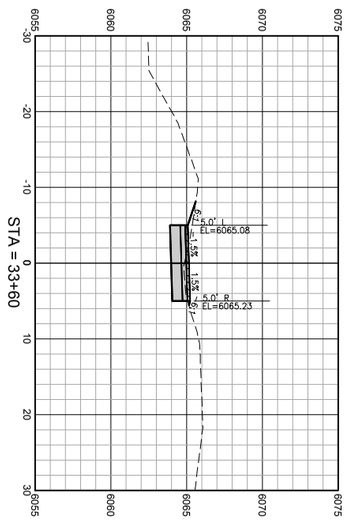

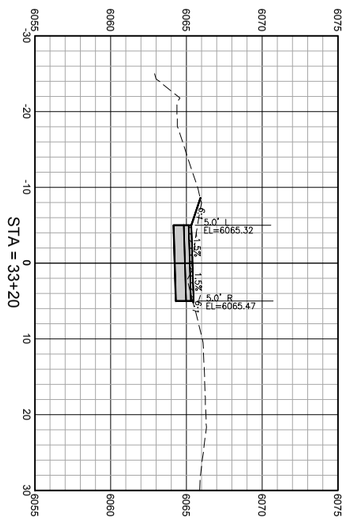

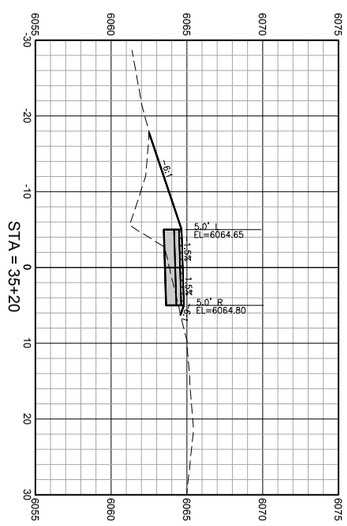

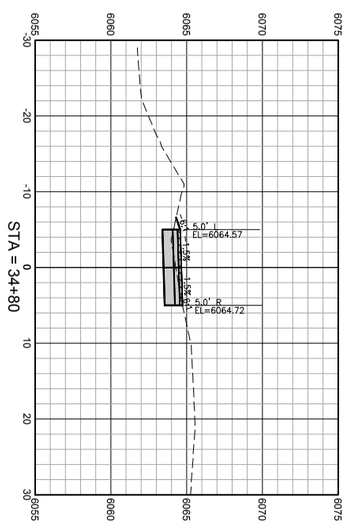

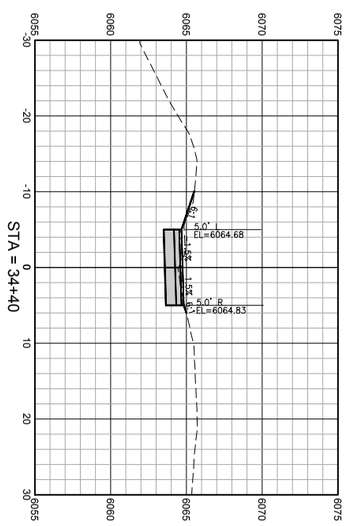

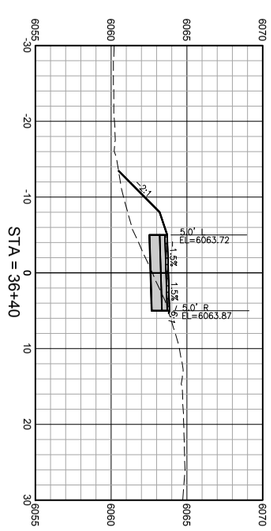

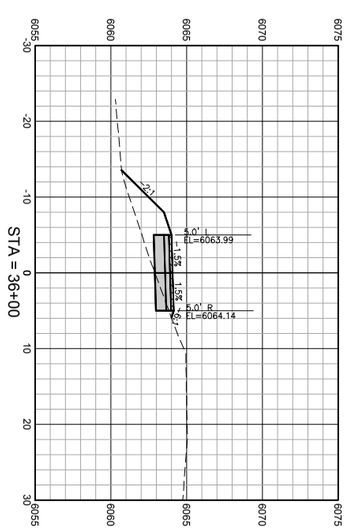

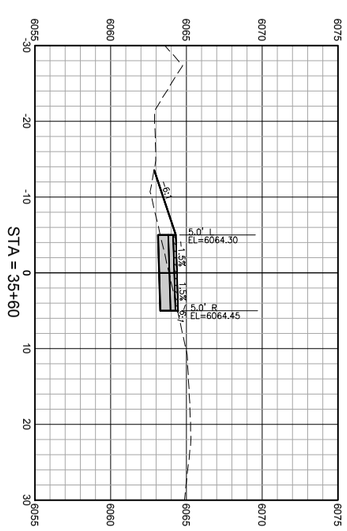

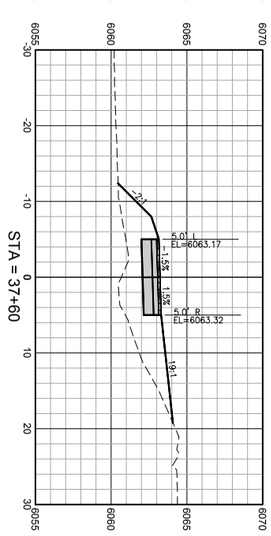

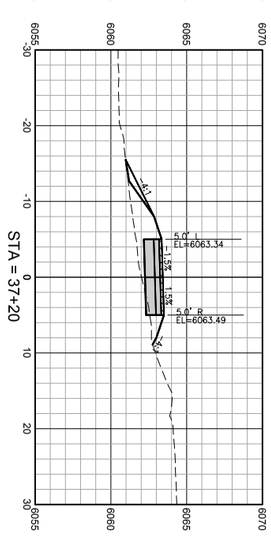

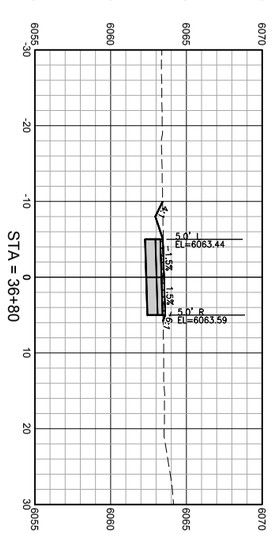

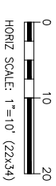

DRAWING NO: X8	JOB TITLE: SOUTH PARK LOOP CONNECTOR PATHWAY PROJECT TETON COUNTY, WY	DRAWING TITLE: CROSS SECTIONS	NELSON ENGINEERING P.O. BOX 1599, JACKSON WYOMING (307) 733-2087	DATE: 5/13/2016	REV.
JOB NO: 15-257-02				SURVEYED: NE	
				ENGINEERED: DD	
				DRAWN: DB	
				CHECKED: DD	
				APPROVED: DD	

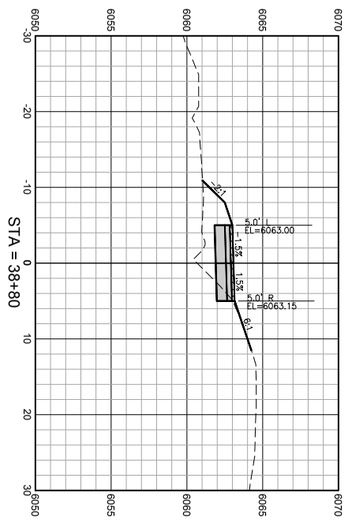

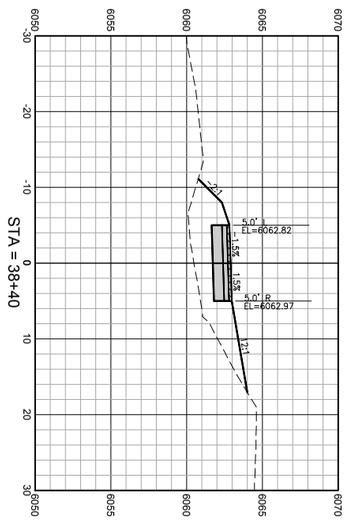

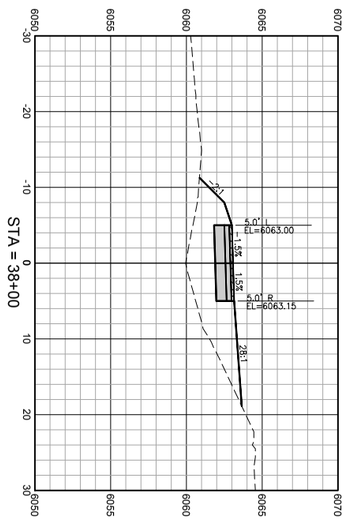

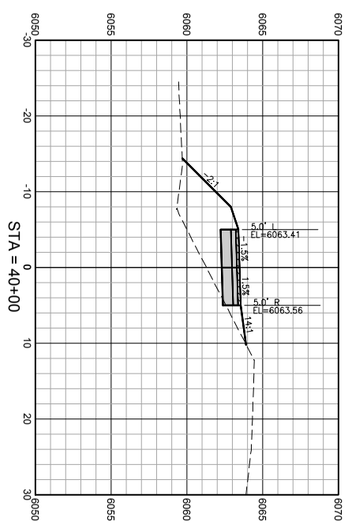

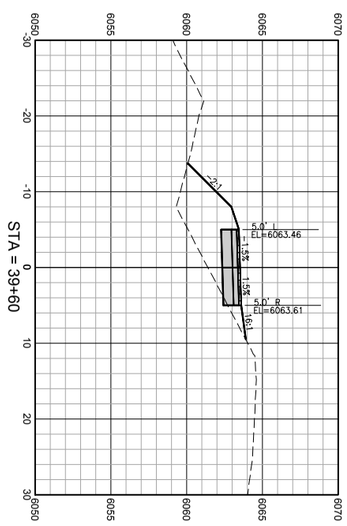

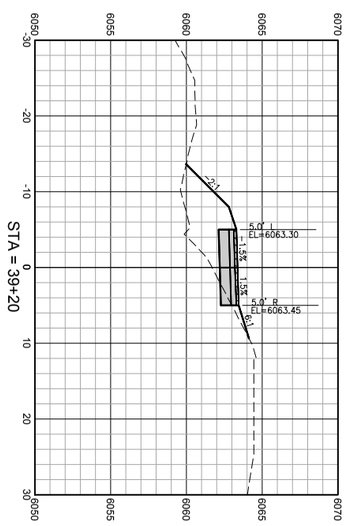

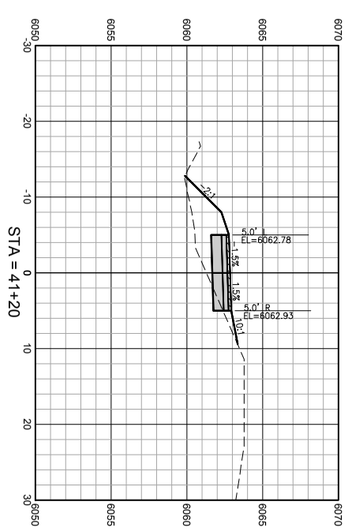

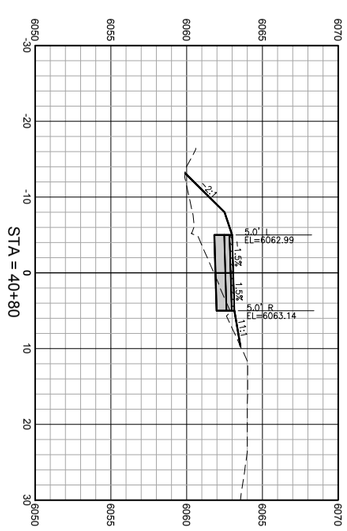

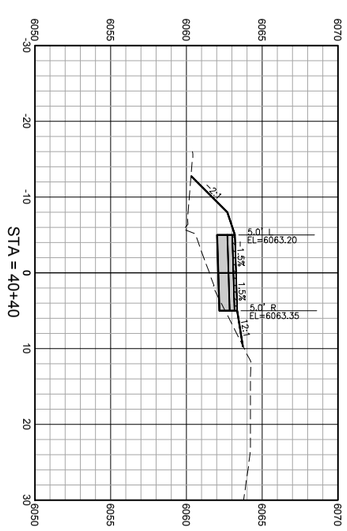

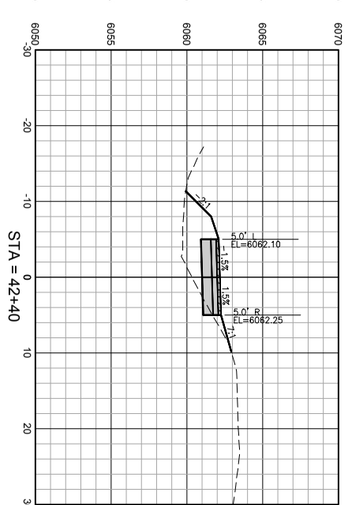

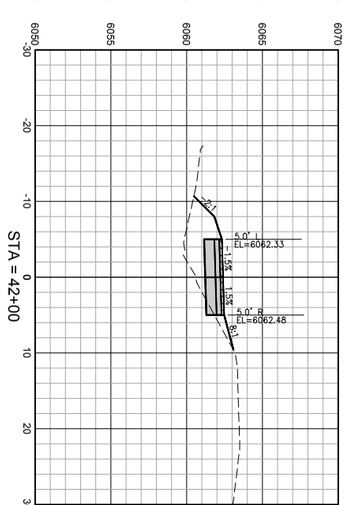

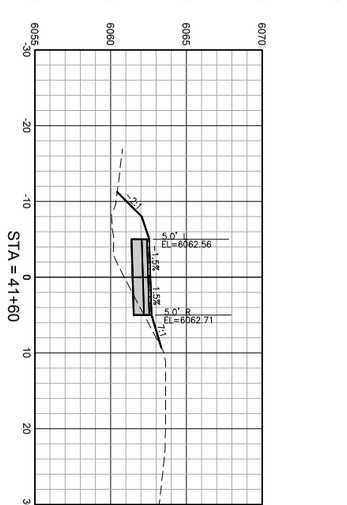

HORIZ SCALE: 1"=10' (22x34)

DRAWING NO: X9	JOB TITLE: SOUTH PARK LOOP CONNECTOR PATHWAY PROJECT TETON COUNTY, WY	DRAWING TITLE: CROSS SECTIONS	NELSON ENGINEERING P.O. BOX 1599, JACKSON WYOMING (307) 733-2087	DATE: 5/13/2016	REV.
JOB NO: 15-257-02				SURVEYED: NE	
				ENGINEERED: DD	
				DRAWN: DB	
				CHECKED: DD	
				APPROVED: DD	

S:\Proj2015\257-02 (Design - South Park Loop Pathway Connector)\Drawings\Align & Grading.dwg (Section Sheet - 10) - May 13 2016 09:49:43 pm PLOTTED BY: korichner DWG FORMAT: 19.1

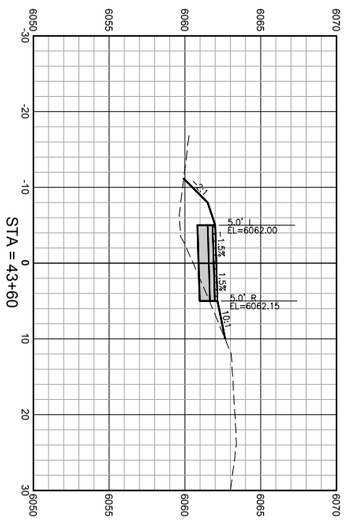

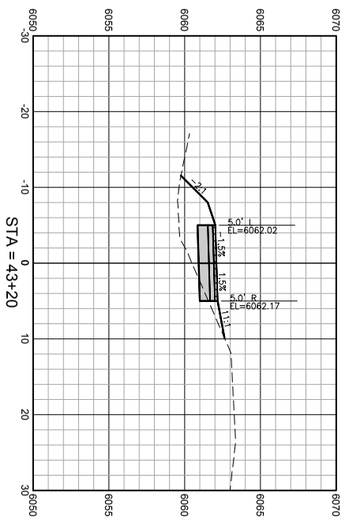

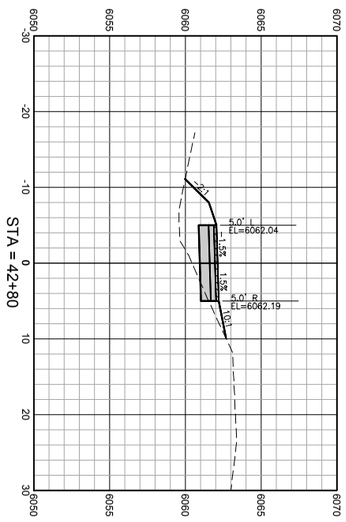

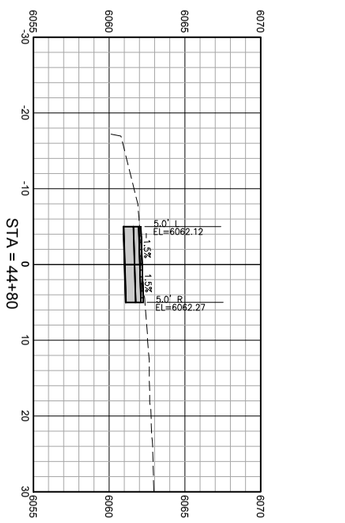

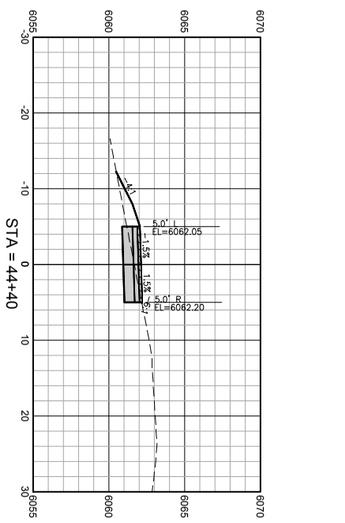

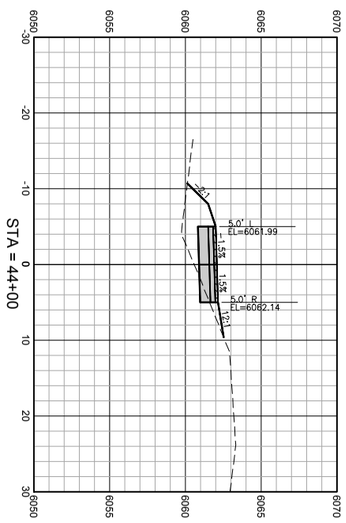

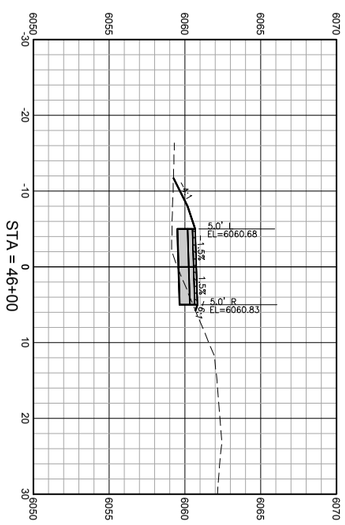

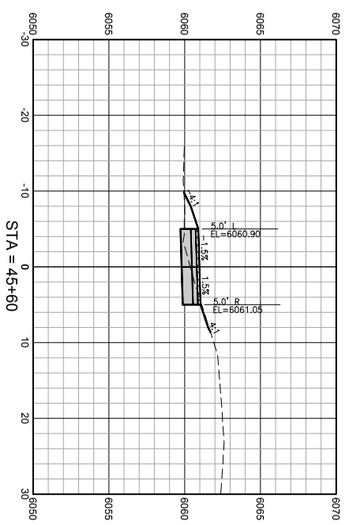

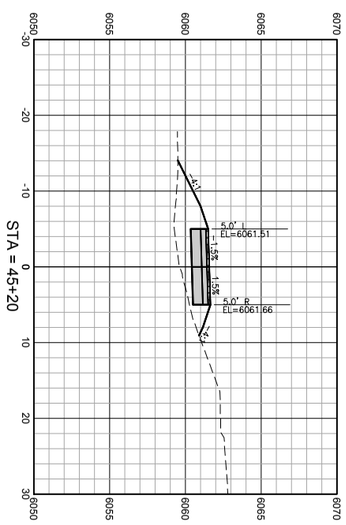

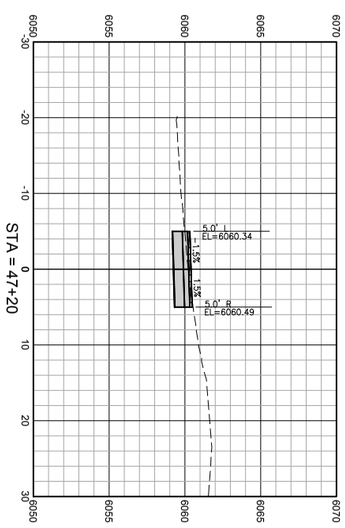

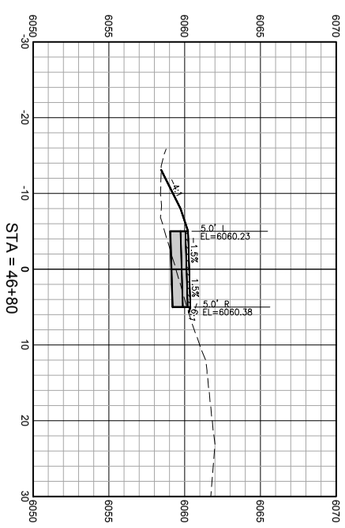

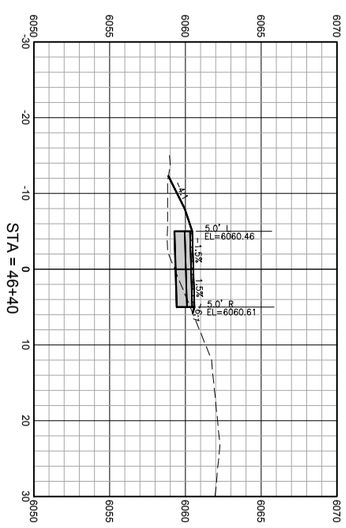

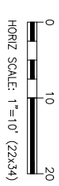

DRAWING NO: X10	JOB TITLE: SOUTH PARK LOOP CONNECTOR PATHWAY PROJECT TETON COUNTY, WY	DRAWING TITLE: CROSS SECTIONS	NELSON ENGINEERING P.O. BOX 1599, JACKSON WYOMING (307) 733-2087	DATE: 5/13/2016	REV.
JOB NO: 15-257-02				SURVEYED: NE	
				ENGINEERED: DD	
				DRAWN: DB	
				CHECKED: DD	
				APPROVED: DD	

S:\Proj2015\257-02 (Design - South Park Loop Pathway Connector)\Drawings\Align & Grading.dwg (Section Sheet - 11) - May 13 2016 01:49:58 pm PLOTTED BY: korichner DWG FORMAT: 191

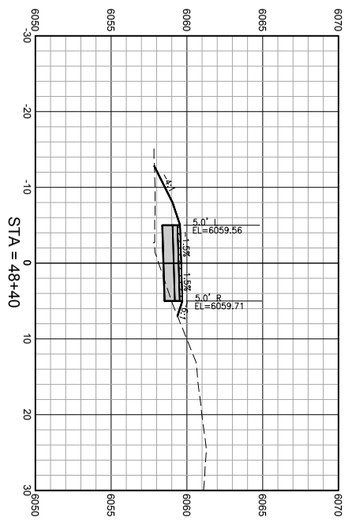

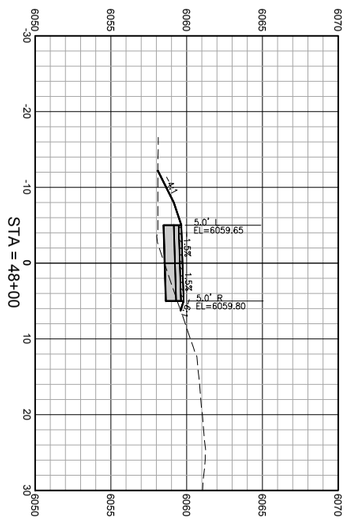

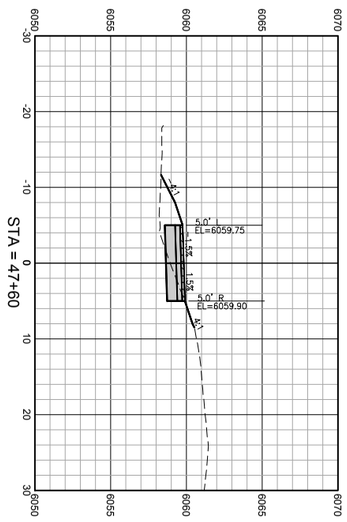

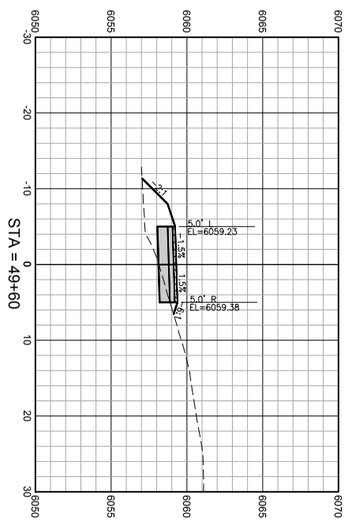

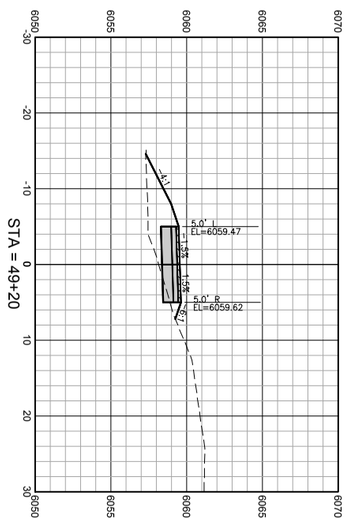

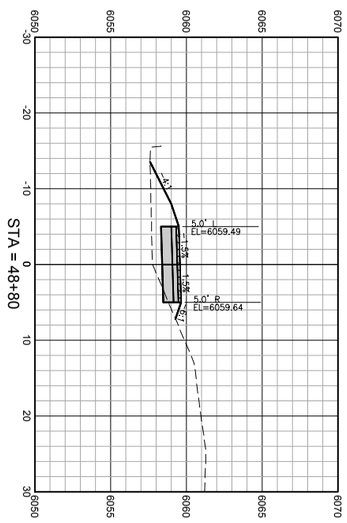

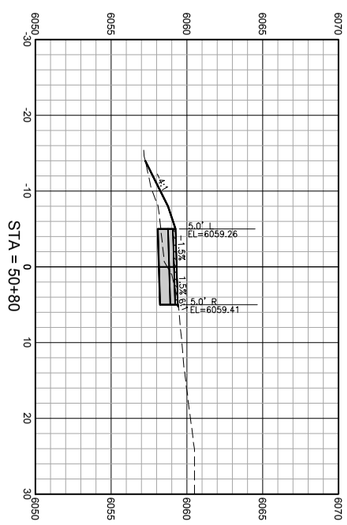

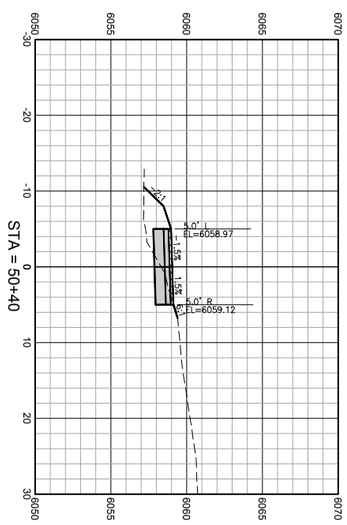

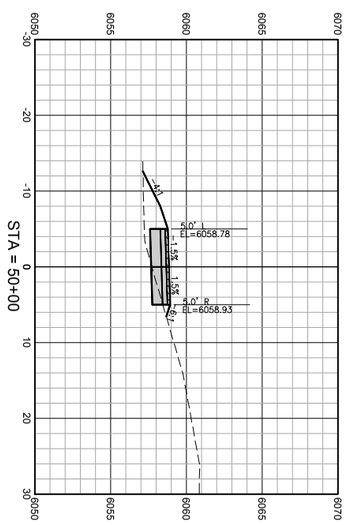

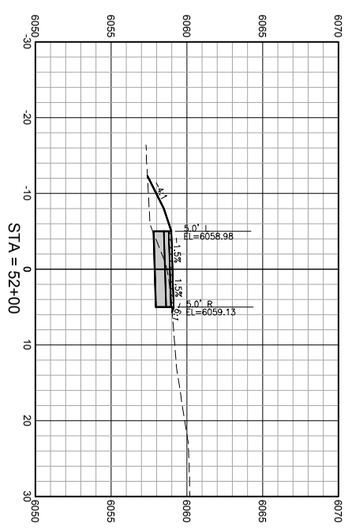

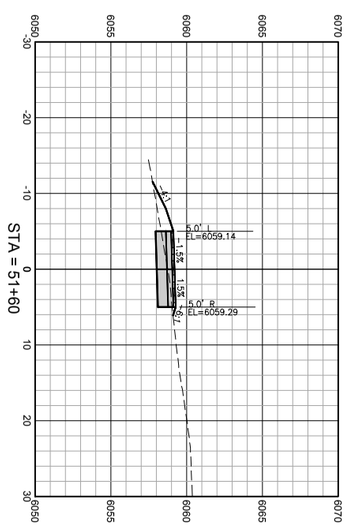

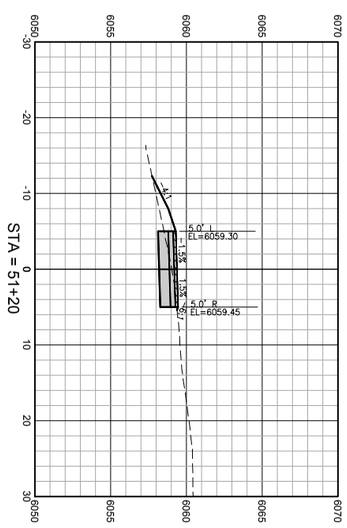

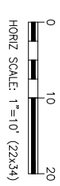

DRAWING NO: X11	JOB TITLE: SOUTH PARK LOOP CONNECTOR PATHWAY PROJECT TETON COUNTY, WY	DRAWING TITLE: CROSS SECTIONS	NELSON ENGINEERING P.O. BOX 1599, JACKSON WYOMING (307) 733-2087	DATE: 5/13/2016	REV.
JOB NO: 15-257-02				SURVEYED: NE	
				ENGINEERED: DD	
				DRAWN: DB	
				CHECKED: DD	
				APPROVED: DD	

S:\Proj2015\257-02 (Design - South Park Loop Pathway Connector)\Drawings\Align & Grading.dwg (Section Sheet - 12) - May 13 2016 01:30:14 pm PLOTTED BY: korichner DWG FORMAT: 19.1

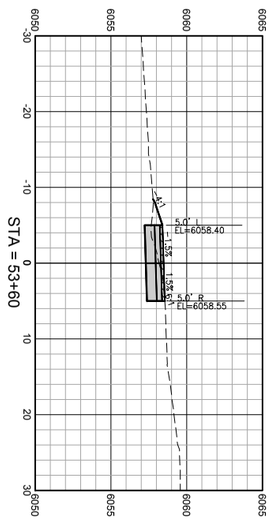

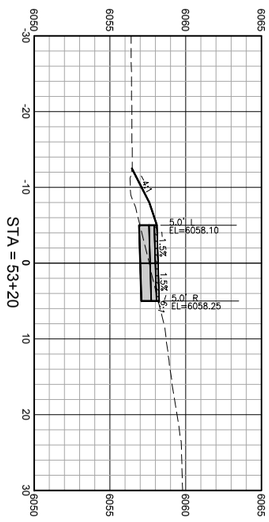

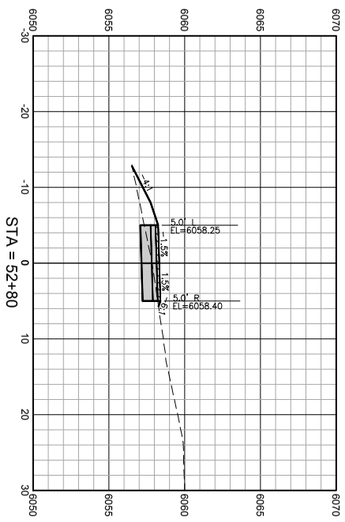

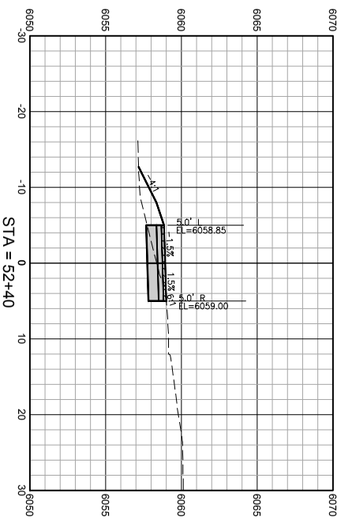

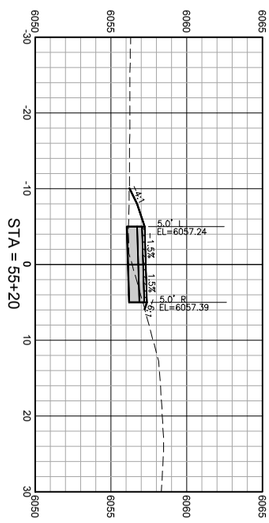

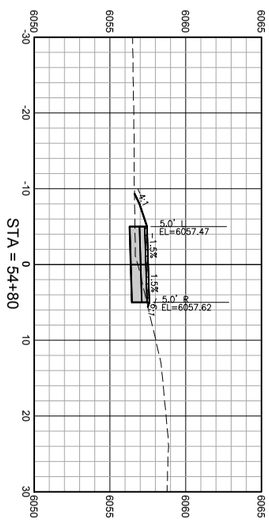

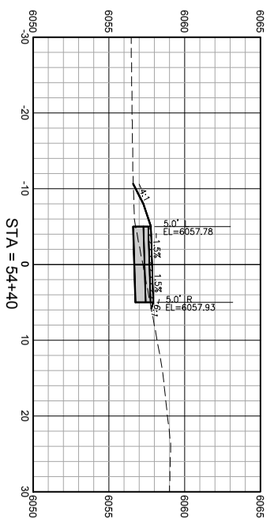

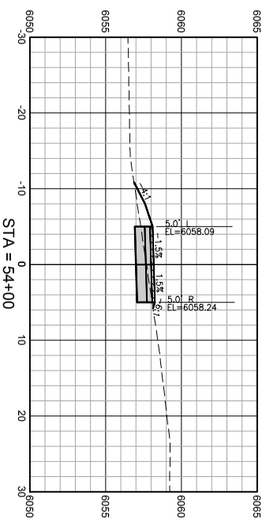

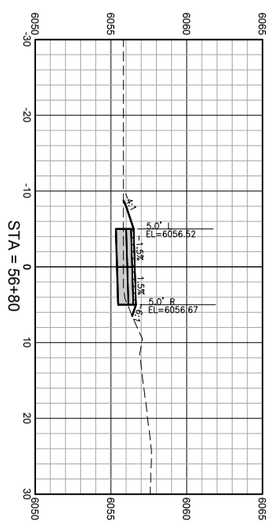

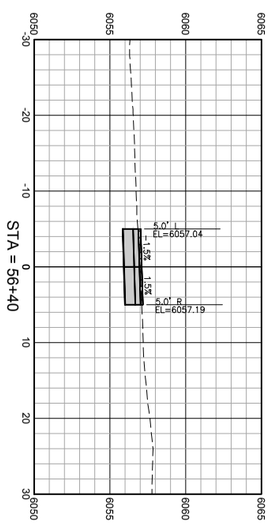

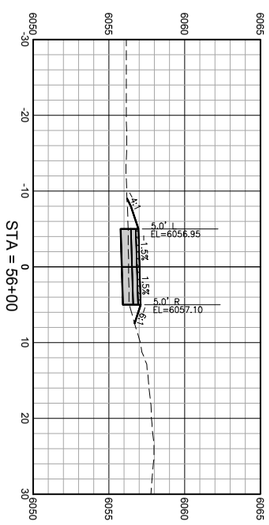

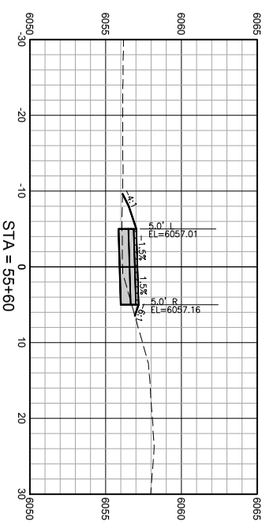

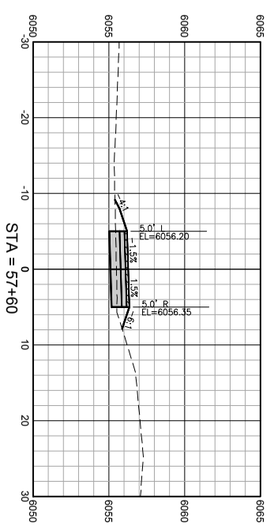

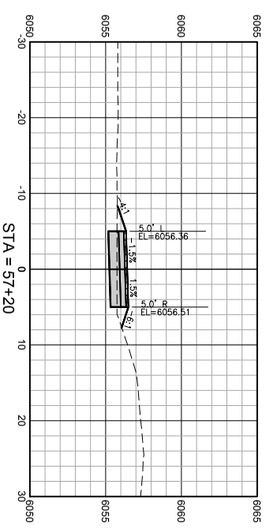

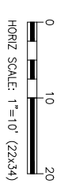

DRAWING NO: X12	JOB TITLE: SOUTH PARK LOOP CONNECTOR PATHWAY PROJECT TETON COUNTY, WY	DRAWING TITLE: CROSS SECTIONS	NELSON ENGINEERING P.O. BOX 1599, JACKSON WYOMING (307) 733-2087	DATE: 5/13/2016	REV.
JOB NO: 15-257-02				SURVEYED: NE	
				ENGINEERED: DD	
				DRAWN: DB	
				CHECKED: DD	
				APPROVED: DD	

S:\Proj2015\257-02 (Design - South Park Loop Pathway Connector)\Drawings\Align & Grading.dwg (Section Sheet - 13) - May 13 2016 01:50:28 pm PLOTTED BY: korichner DWG FORMAT: 19.1

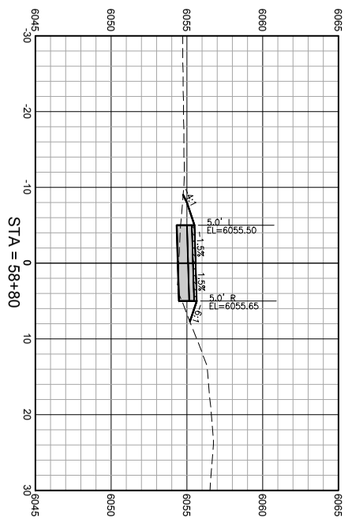

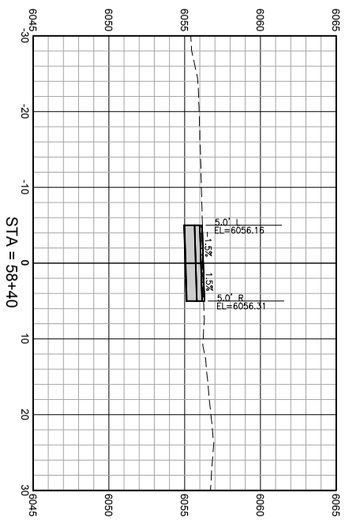

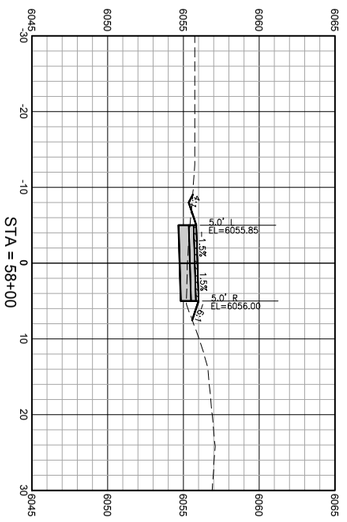

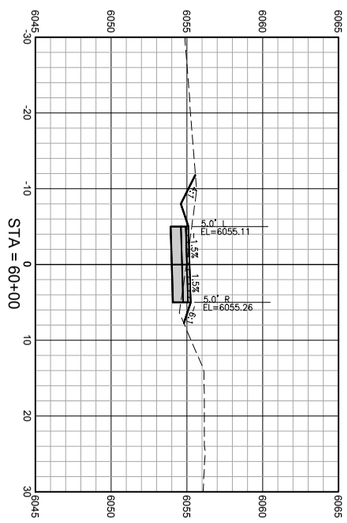

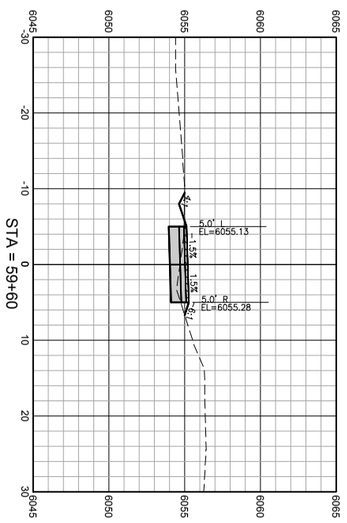

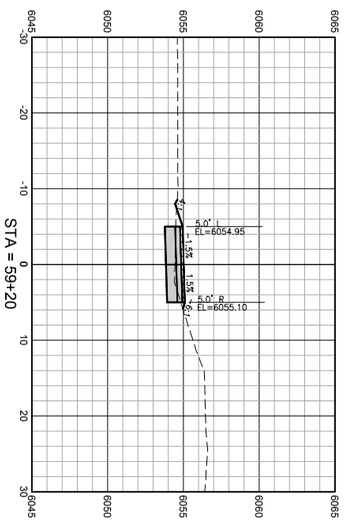

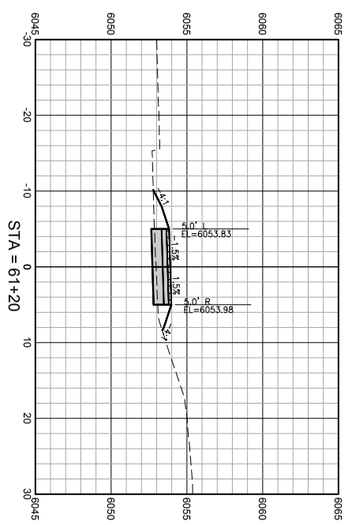

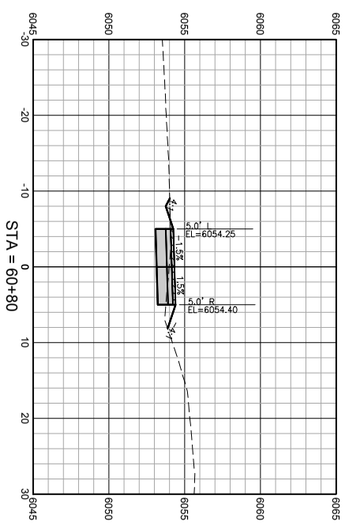

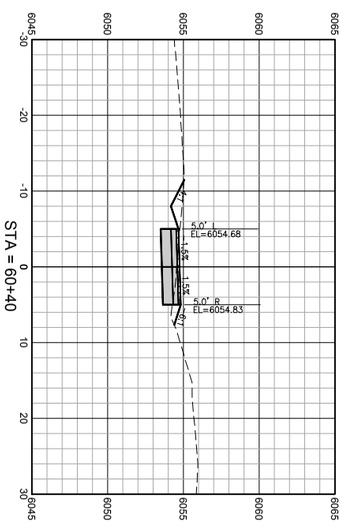

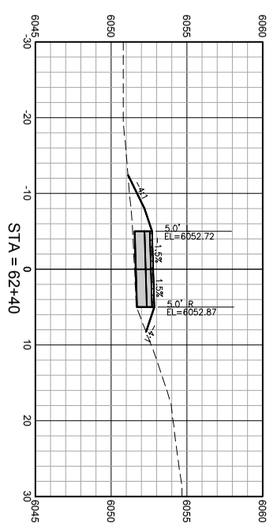

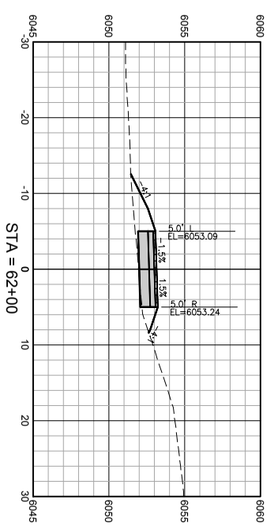

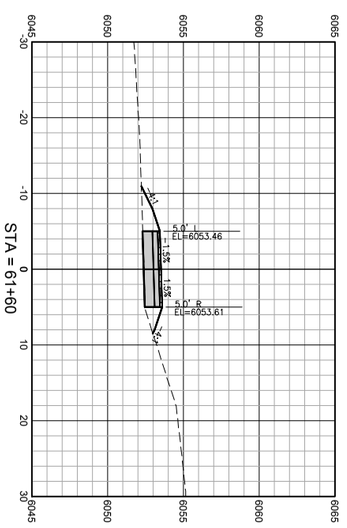

HORIZ SCALE: 1"=10' (22x34)

DRAWING NO: X13	JOB TITLE: SOUTH PARK LOOP CONNECTOR PATHWAY PROJECT TETON COUNTY, WY	DRAWING TITLE: CROSS SECTIONS	NELSON ENGINEERING P.O. BOX 1599, JACKSON WYOMING (307) 733-2087	DATE: 5/13/2016	REV.
JOB NO: 15-257-02				SURVEYED: NE	
				ENGINEERED: DD	
				DRAWN: DB	
				CHECKED: DD	
				APPROVED: DD	

S:\Proj2015\257-02 (Design - South Park Loop Pathway Connector)\Drawings\Align & Grading.dwg <Section Sheet - 14> - May 13 2016 01:50:43 pm PLOTTED BY: korichner DWG FORMAT: 19.1

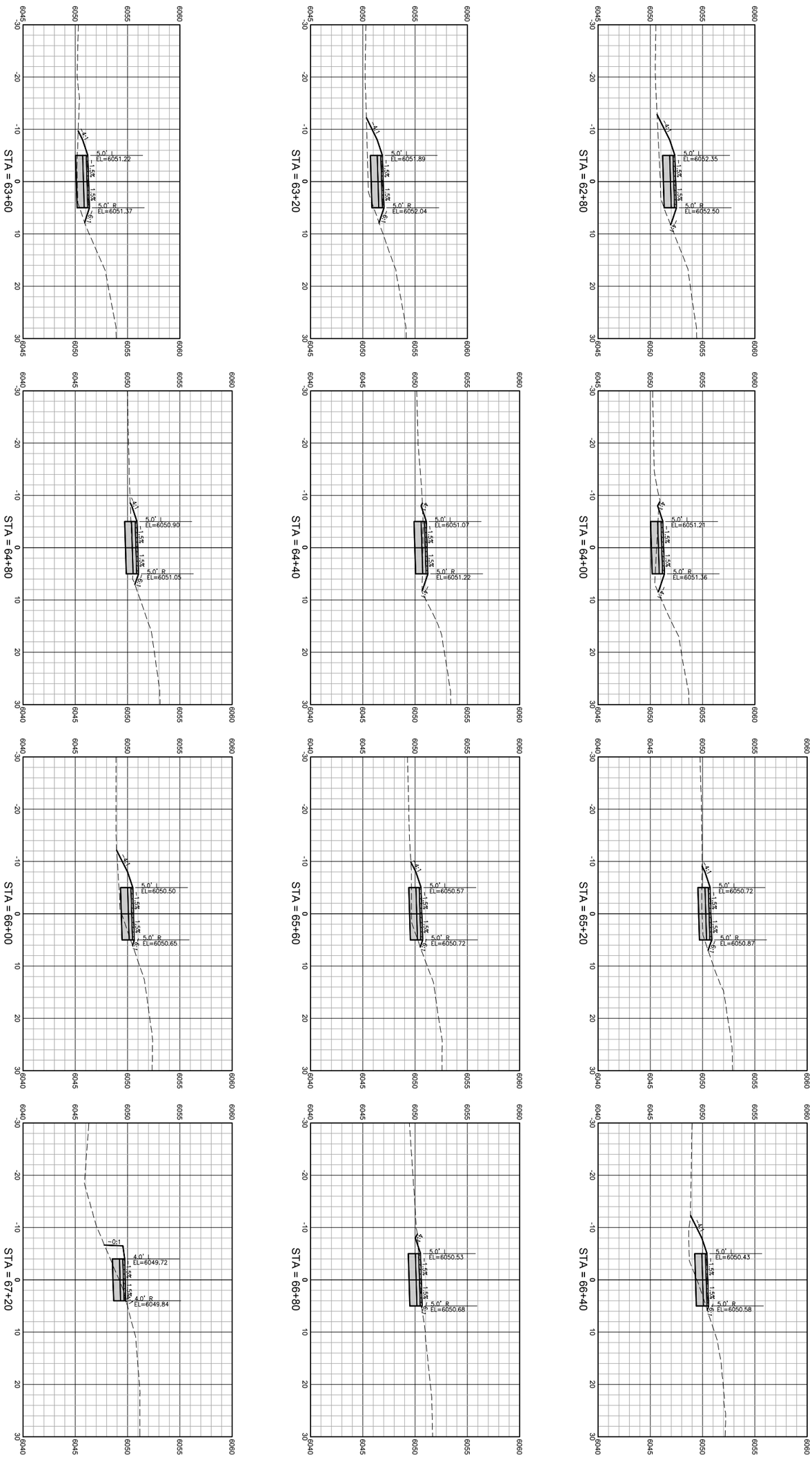

DRAWING NO: X14	JOB TITLE: SOUTH PARK LOOP CONNECTOR PATHWAY PROJECT TETON COUNTY, WY	DRAWING TITLE: CROSS SECTIONS	NELSON ENGINEERING P.O. BOX 1599, JACKSON WYOMING (307) 733-2087	DATE: 5/13/2016	REV.
JOB NO: 15-257-02				SURVEYED: NE	
				ENGINEERED: DD	
				DRAWN: DB	
				CHECKED: DD	
				APPROVED: DD	

S:\Proj2015\257-02 (Design - South Park Loop Pathway Connector)\Drawings\Align & Grading.dwg (Section Sheet - 15) - May 13 2016 01:50:58 pm PLOTTED BY: korichner DWG FORMAT: 19.1

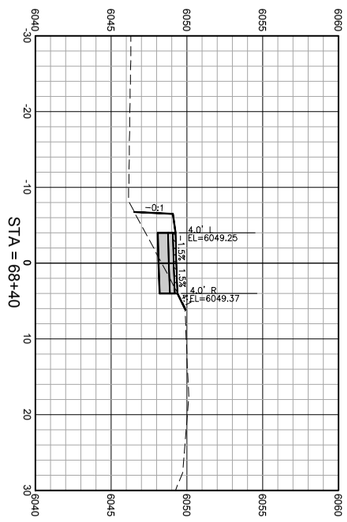

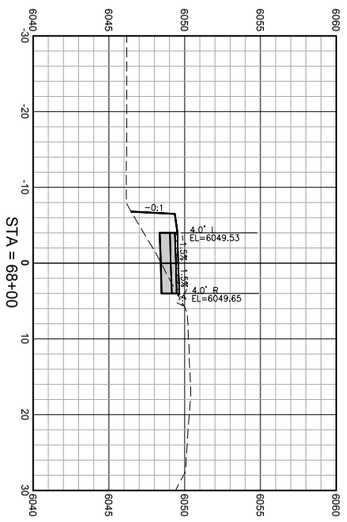

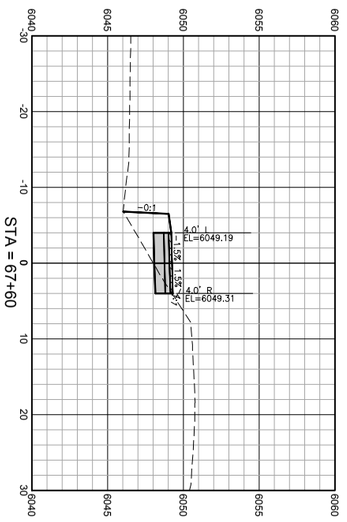

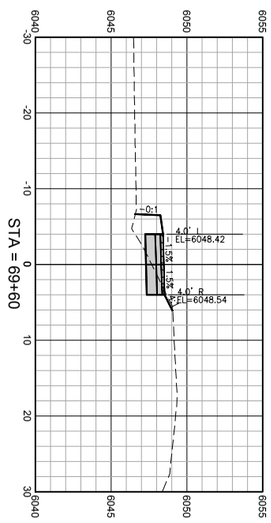

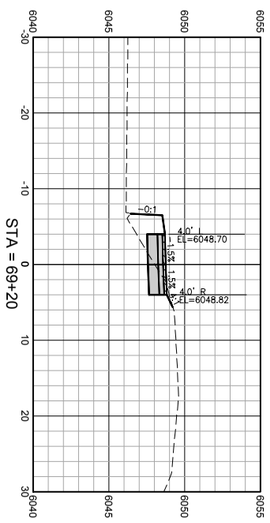

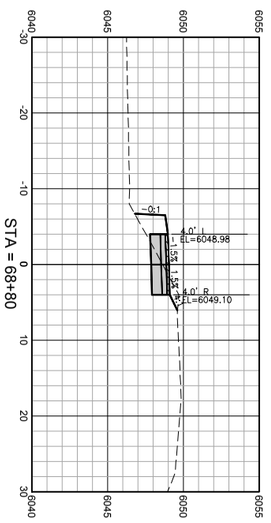

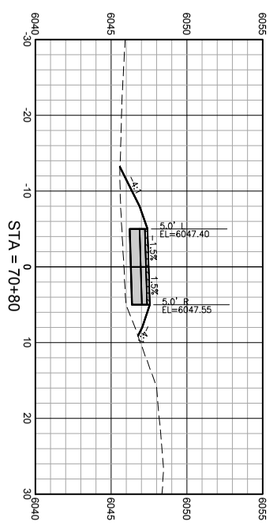

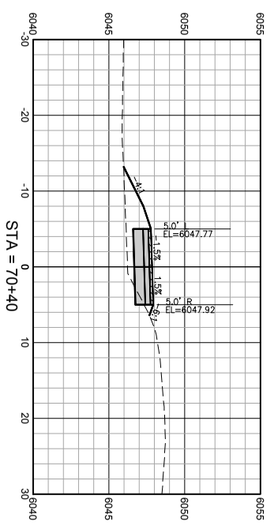

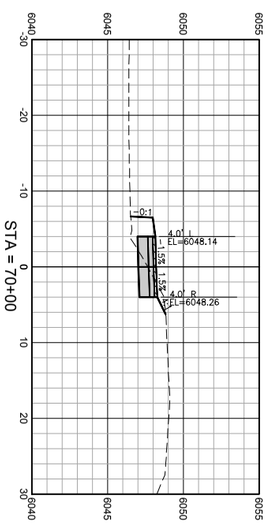

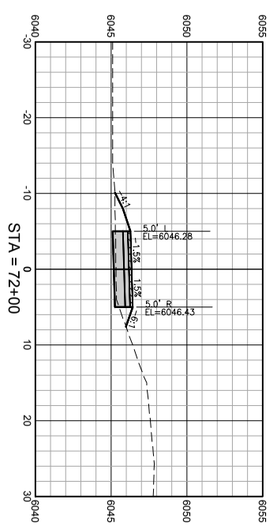

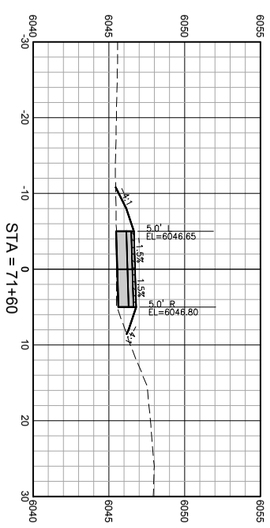

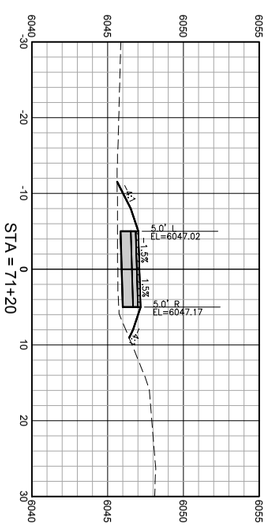

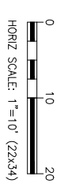

DRAWING NO: X15	JOB TITLE: SOUTH PARK LOOP CONNECTOR PATHWAY PROJECT TETON COUNTY, WY	DRAWING TITLE: CROSS SECTIONS	NELSON ENGINEERING P.O. BOX 1599, JACKSON WYOMING (307) 733-2087	DATE: 5/13/2016	REV.
JOB NO: 15-257-02				SURVEYED: NE	
				ENGINEERED: DD	
				DRAWN: DB	
				CHECKED: DD	
				APPROVED: DD	

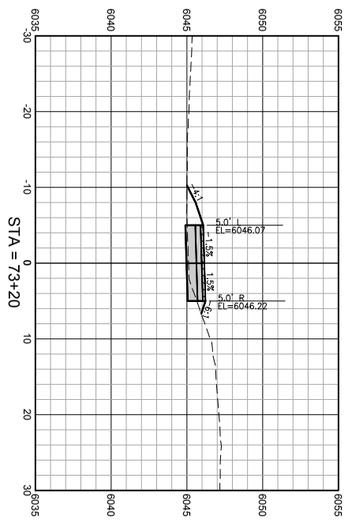

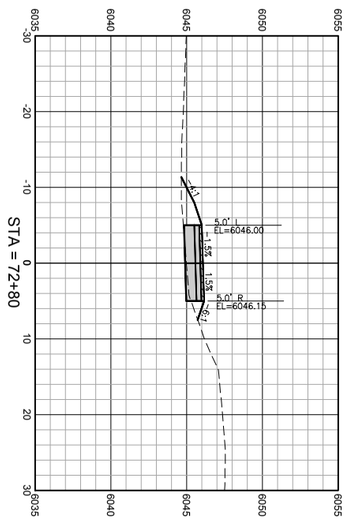

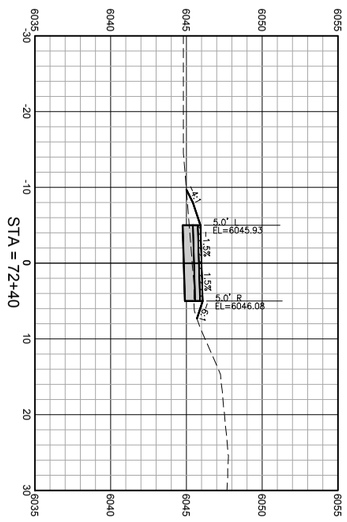

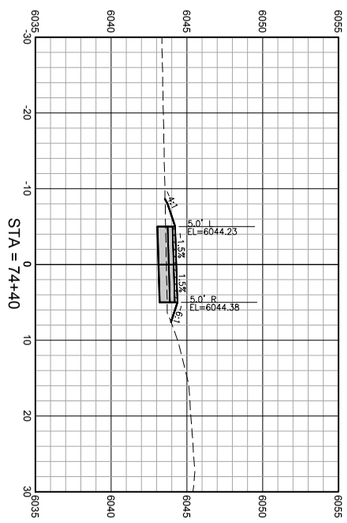

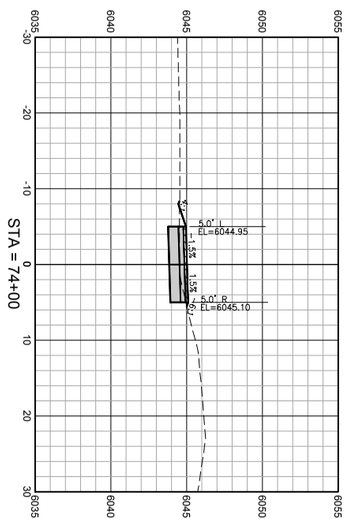

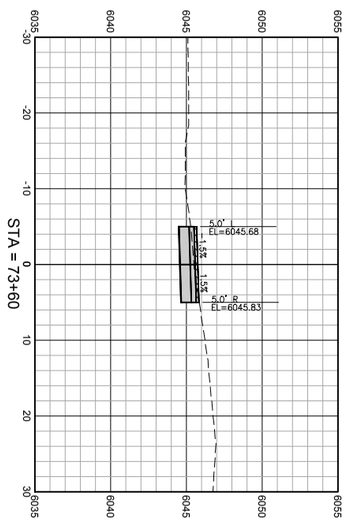

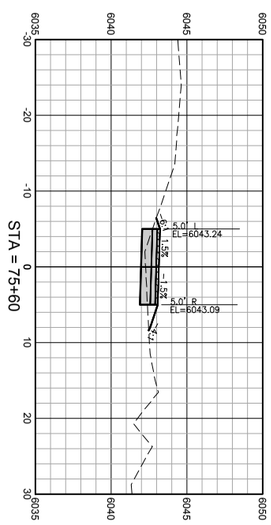

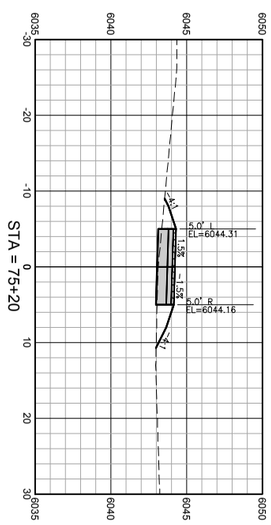

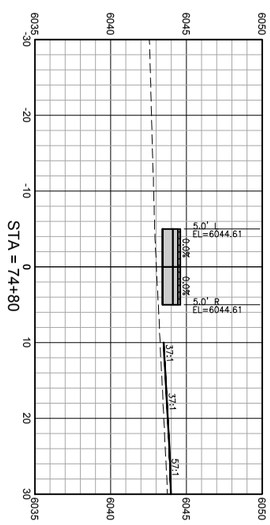

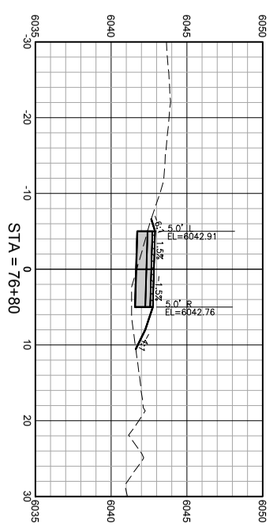

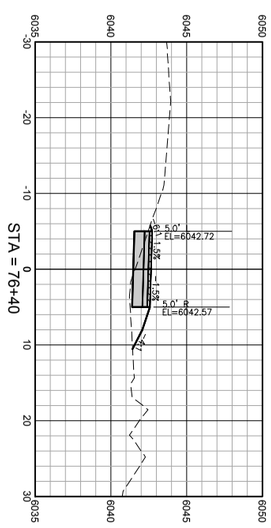

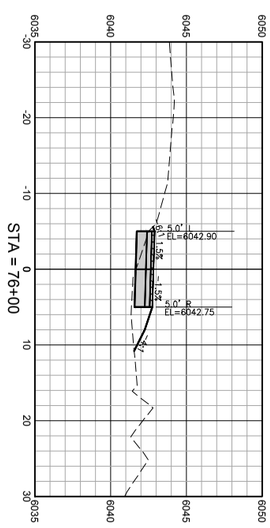

HORIZ SCALE: 1"=10' (22x34)

DRAWING NO: X16	JOB TITLE: SOUTH PARK LOOP CONNECTOR PATHWAY PROJECT TETON COUNTY, WY	DRAWING TITLE: CROSS SECTIONS	NELSON ENGINEERING P.O. BOX 1599, JACKSON WYOMING (307) 733-2087	DATE: 5/13/2016	REV.
JOB NO: 15-257-02				SURVEYED: NE	
				ENGINEERED: DD	
				DRAWN: DB	
				CHECKED: DD	
				APPROVED: DD	

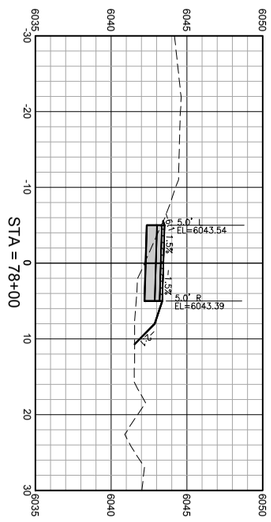

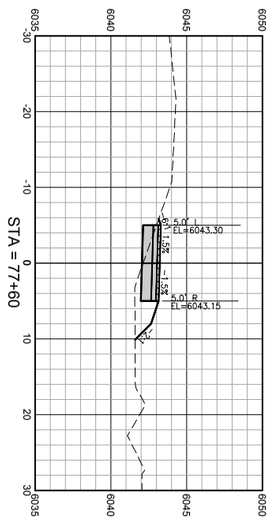

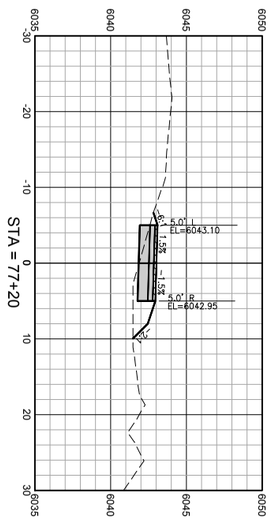

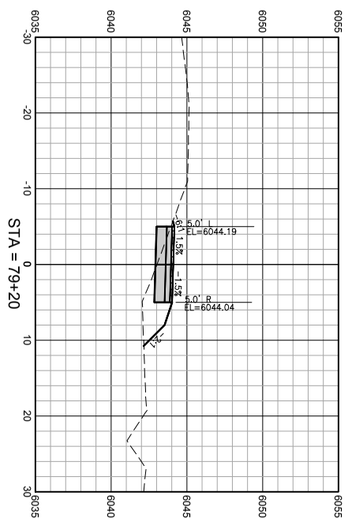

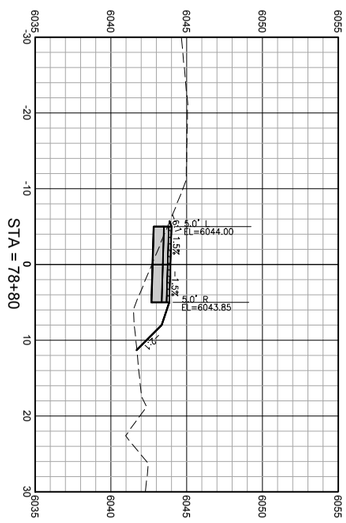

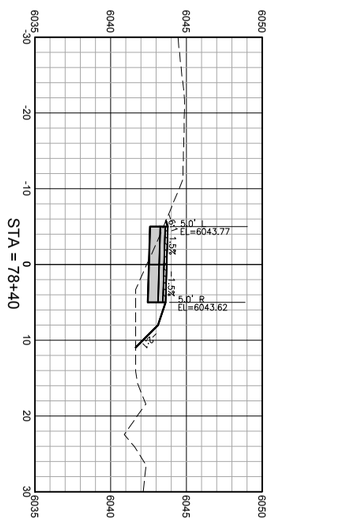

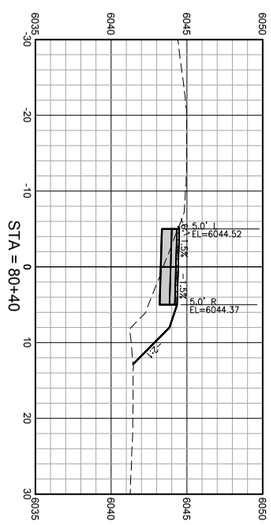

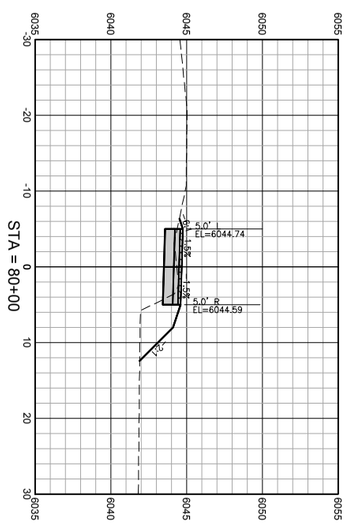

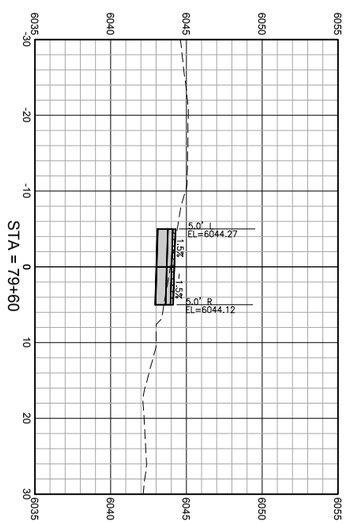

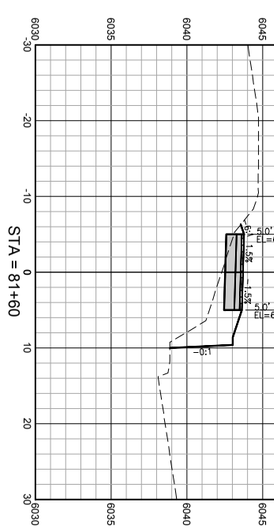

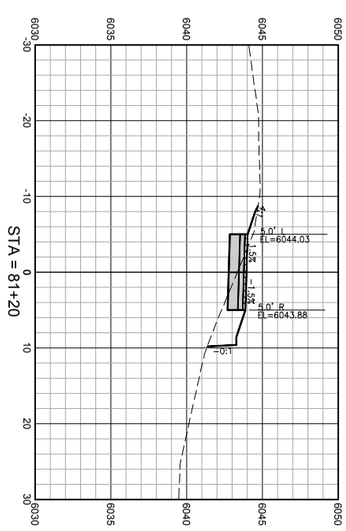

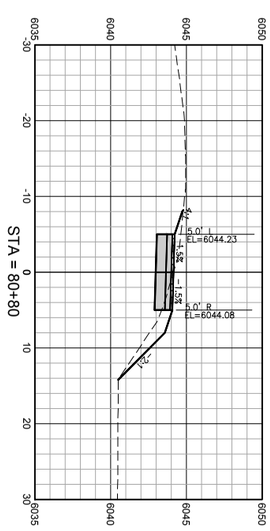

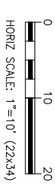

DRAWING NO: X17	JOB TITLE: SOUTH PARK LOOP CONNECTOR PATHWAY PROJECT TETON COUNTY, WY	DRAWING TITLE: CROSS SECTIONS	NELSON ENGINEERING P.O. BOX 1599, JACKSON WYOMING (307) 733-2087	DATE: 5/13/2016	REV.
JOB NO: 15-257-02				SURVEYED: NE	
				ENGINEERED: DD	
				DRAWN: DB	
				CHECKED: DD	
				APPROVED: DD	

S:\Proj2015\257-02 (Design - South Park Loop Pathway Connector)\Drawings\Align & Grading.dwg <Section Sheet - 18> - May 13 2016 01:31:43 pm PLOTTED BY: korichner DWG FORMAT: 19.1

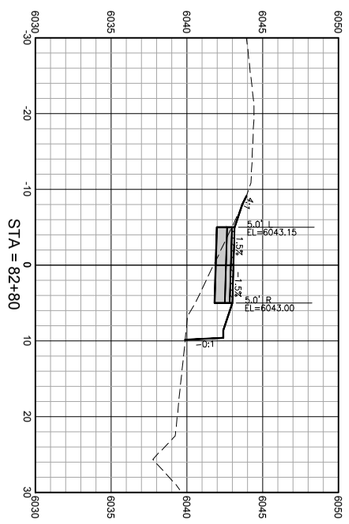

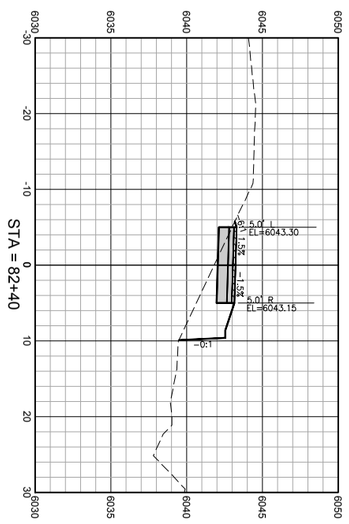

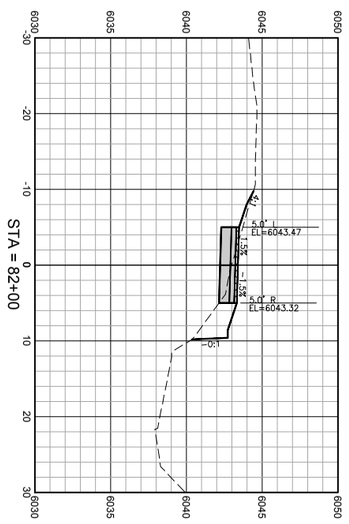

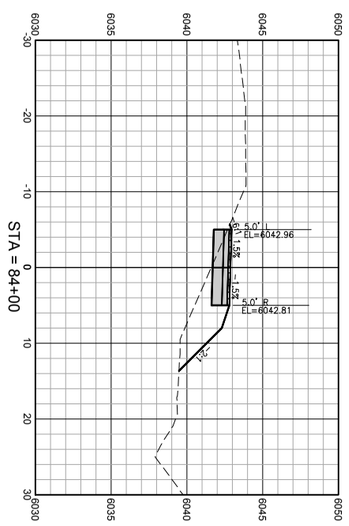

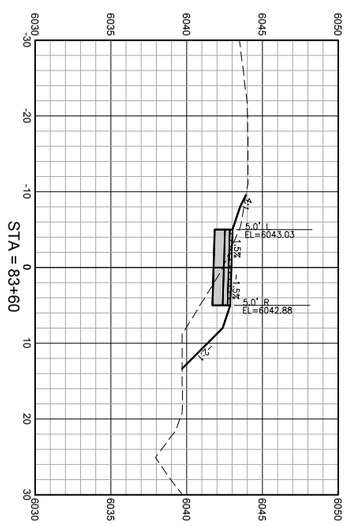

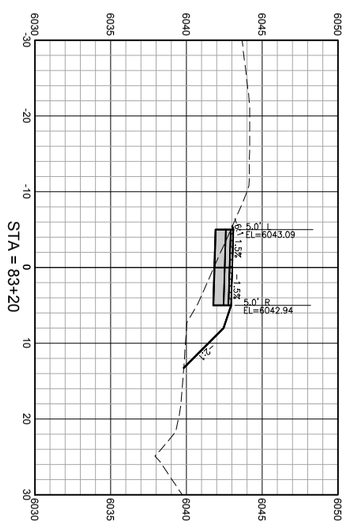

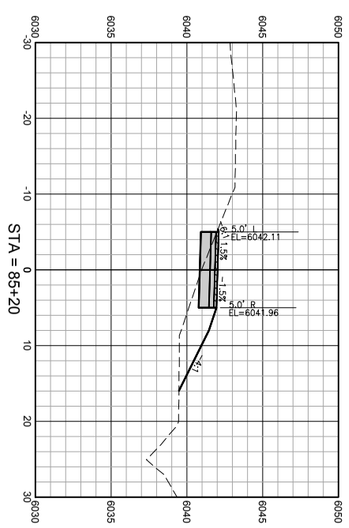

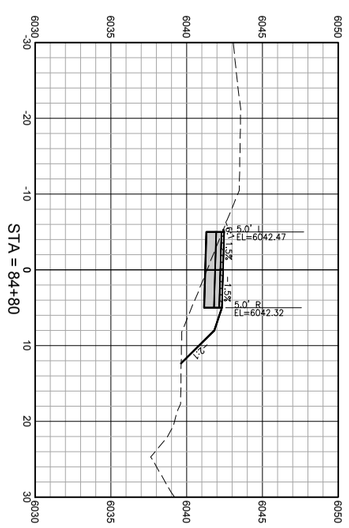

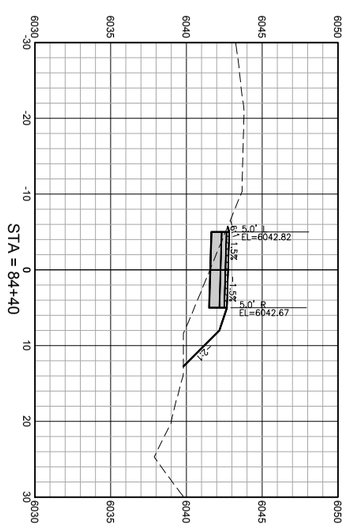

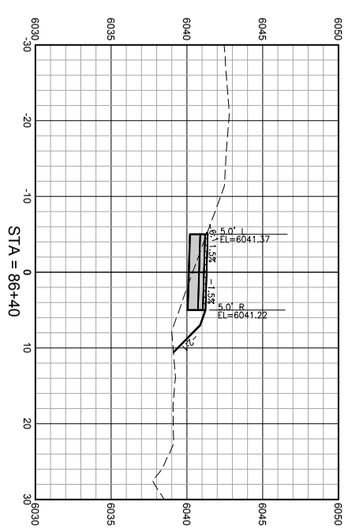

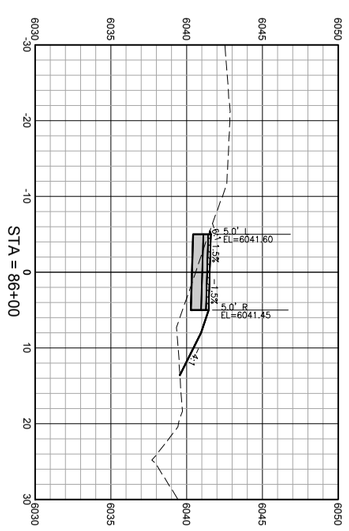

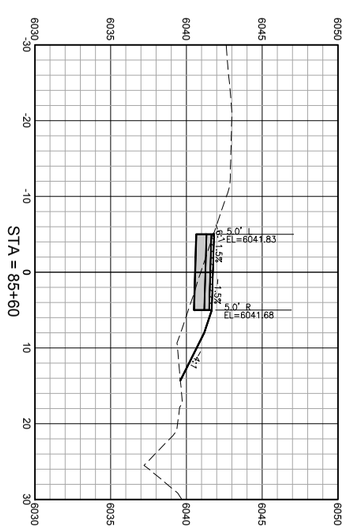

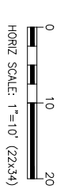

DRAWING NO: X18	JOB TITLE: SOUTH PARK LOOP CONNECTOR PATHWAY PROJECT TETON COUNTY, WY	DRAWING TITLE: CROSS SECTIONS	NELSON ENGINEERING P.O. BOX 1599, JACKSON WYOMING (307) 733-2087	DATE: 5/13/2016	REV.
JOB NO: 15-257-02				SURVEYED: NE	
				ENGINEERED: DD	
				DRAWN: DB	
				CHECKED: DD	
				APPROVED: DD	

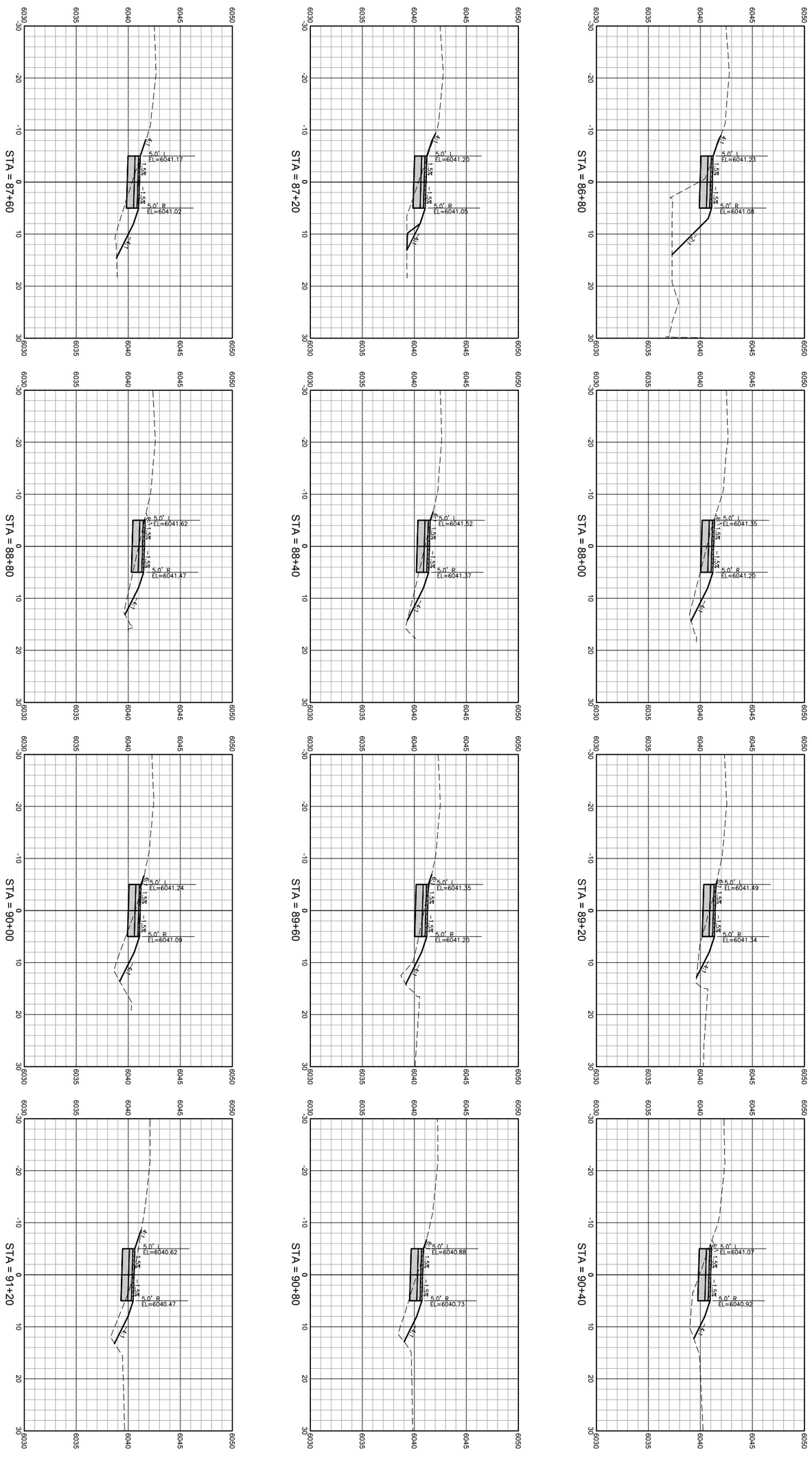

HORIZ SCALE: 1"=10' (22x34)

0 10 20

DRAWING NO: X19	JOB TITLE: SOUTH PARK LOOP CONNECTOR PATHWAY PROJECT TETON COUNTY, WY	DRAWING TITLE: CROSS SECTIONS	NELSON ENGINEERING P.O. BOX 1599, JACKSON WYOMING (307) 733-2087	DATE: 5/13/2016	REV.
JOB NO: 15-257-02				SURVEYED: NE	
				ENGINEERED: DD	
				DRAWN: DB	
				CHECKED: DD	
				APPROVED: DD	

S:\Proj2015\257-02 (Design - South Park Loop Pathway Connector)\Drawings\Align & Grading.dwg <Section Sheet - 20> - May 13 2016 09:52:13 pm PLOTTED BY: korichner DWG FORMAT: 19.1

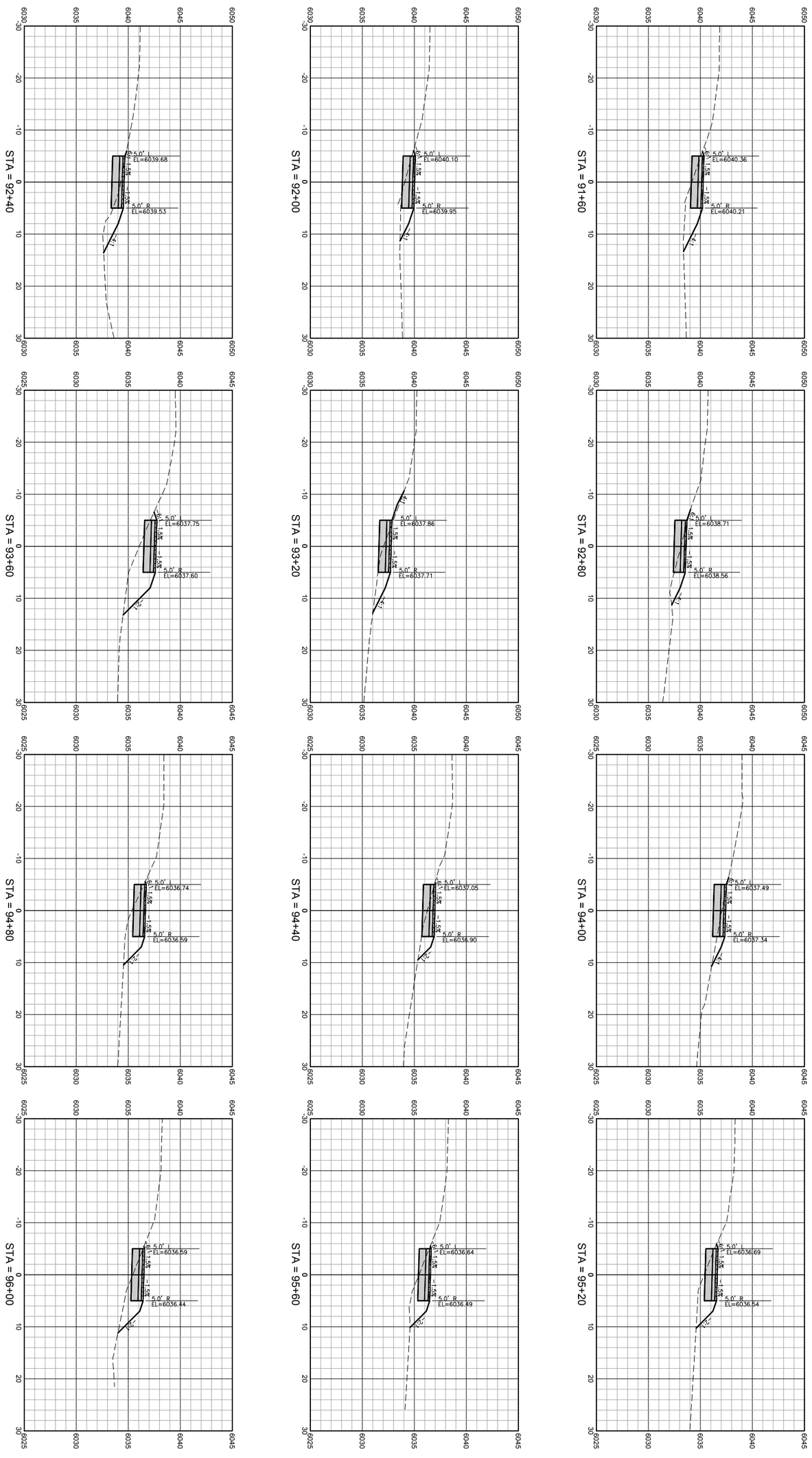

HORIZ SCALE: 1"=10' (22x34)

DRAWING NO: X20	JOB TITLE: SOUTH PARK LOOP CONNECTOR PATHWAY PROJECT TETON COUNTY, WY	DRAWING TITLE: CROSS SECTIONS	NELSON ENGINEERING P.O. BOX 1599, JACKSON WYOMING (307) 733-2087	DATE: 5/13/2016	REV.
JOB NO: 15-257-02				SURVEYED: NE	
				ENGINEERED: DD	
				DRAWN: DB	
				CHECKED: DD	
				APPROVED: DD	

S:\Proj2015\257-02 (Design - South Park Loop Pathway Connector)\Drawings\Align & Grading.dwg (Section Sheet - 21) - May 13 2016 01:32:28 pm PLOTTED BY: kwirichner DWG FORMAT: 19.1

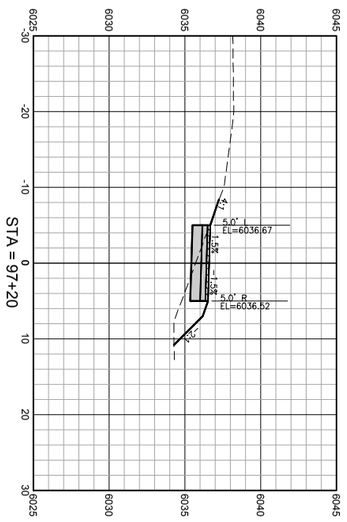

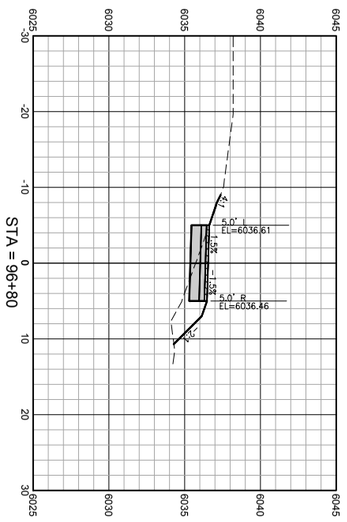

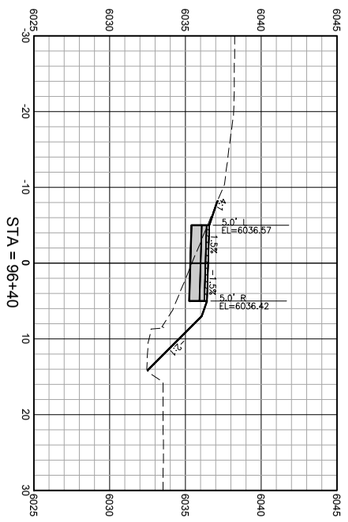

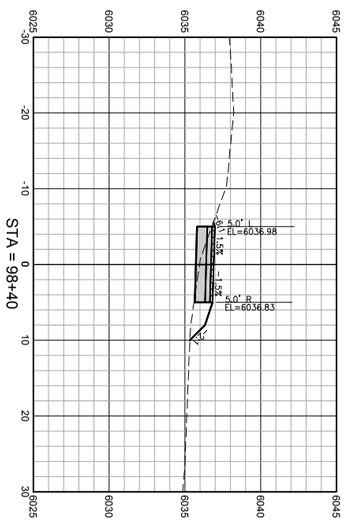

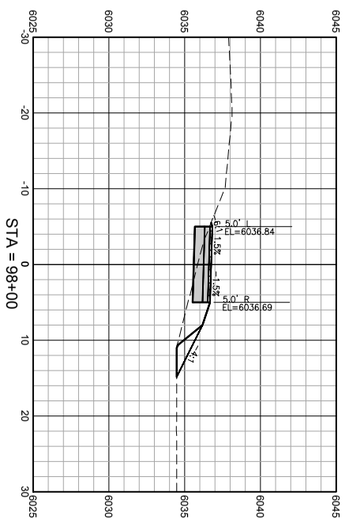

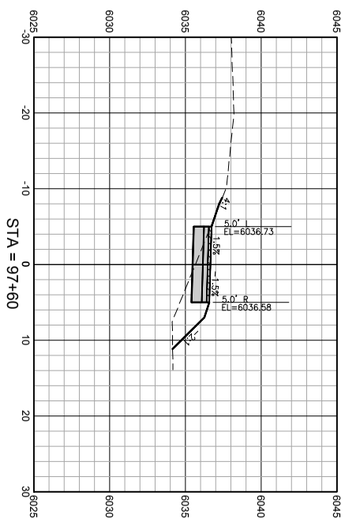

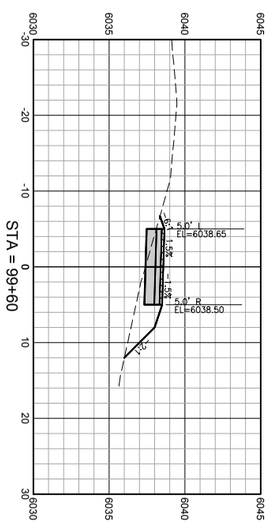

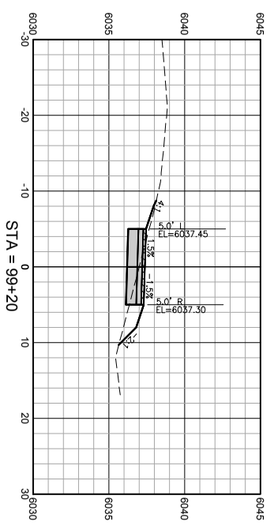

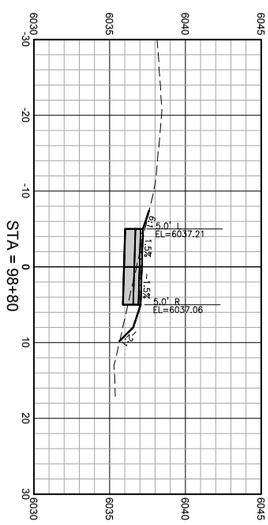

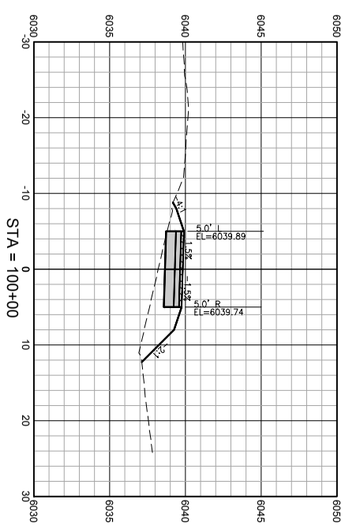

HORIZ SCALE: 1"=10' (22x34)

DRAWING NO: X21	JOB TITLE: SOUTH PARK LOOP CONNECTOR PATHWAY PROJECT TETON COUNTY, WY	DRAWING TITLE: CROSS SECTIONS	NELSON ENGINEERING P.O. BOX 1599, JACKSON WYOMING (307) 733-2087	DATE: 5/13/2016	REV.
JOB NO: 15-257-02				SURVEYED: NE	
				ENGINEERED: DD	
				DRAWN: DB	
				CHECKED: DD	
				APPROVED: DD	

✱ USE ONLY IF NO PREVIOUS "ROAD WORK AHEAD" SIGNS WITHIN 1 MILE [1.6 km], OR IF OUTSIDE OF THE REGULAR CONSTRUCTION AREA.

◆ TYPICAL APPROACH SIGNING, SIGN FOR BOTH DIRECTIONS (SIGNS SHOWN FOR ONE DIRECTION OF TRAVEL ONLY).

LEGEND

- TYPE III DELINEATOR
- CONSTRUCTION AREA
- STORAGE AREA
- DRUM

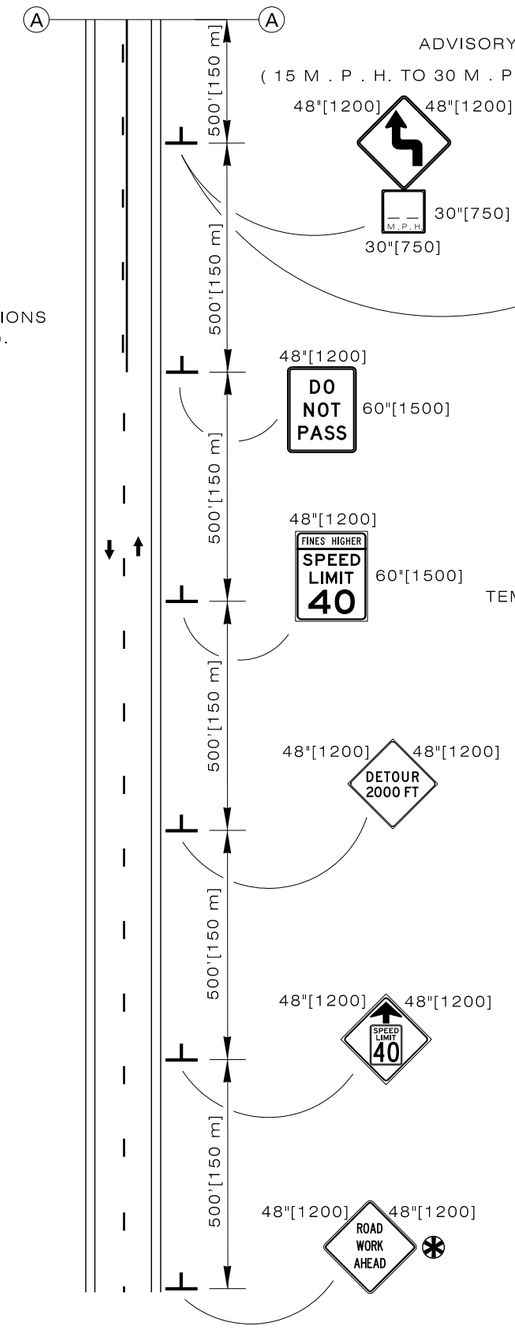

◆ TYPICAL APPROACH SIGNING

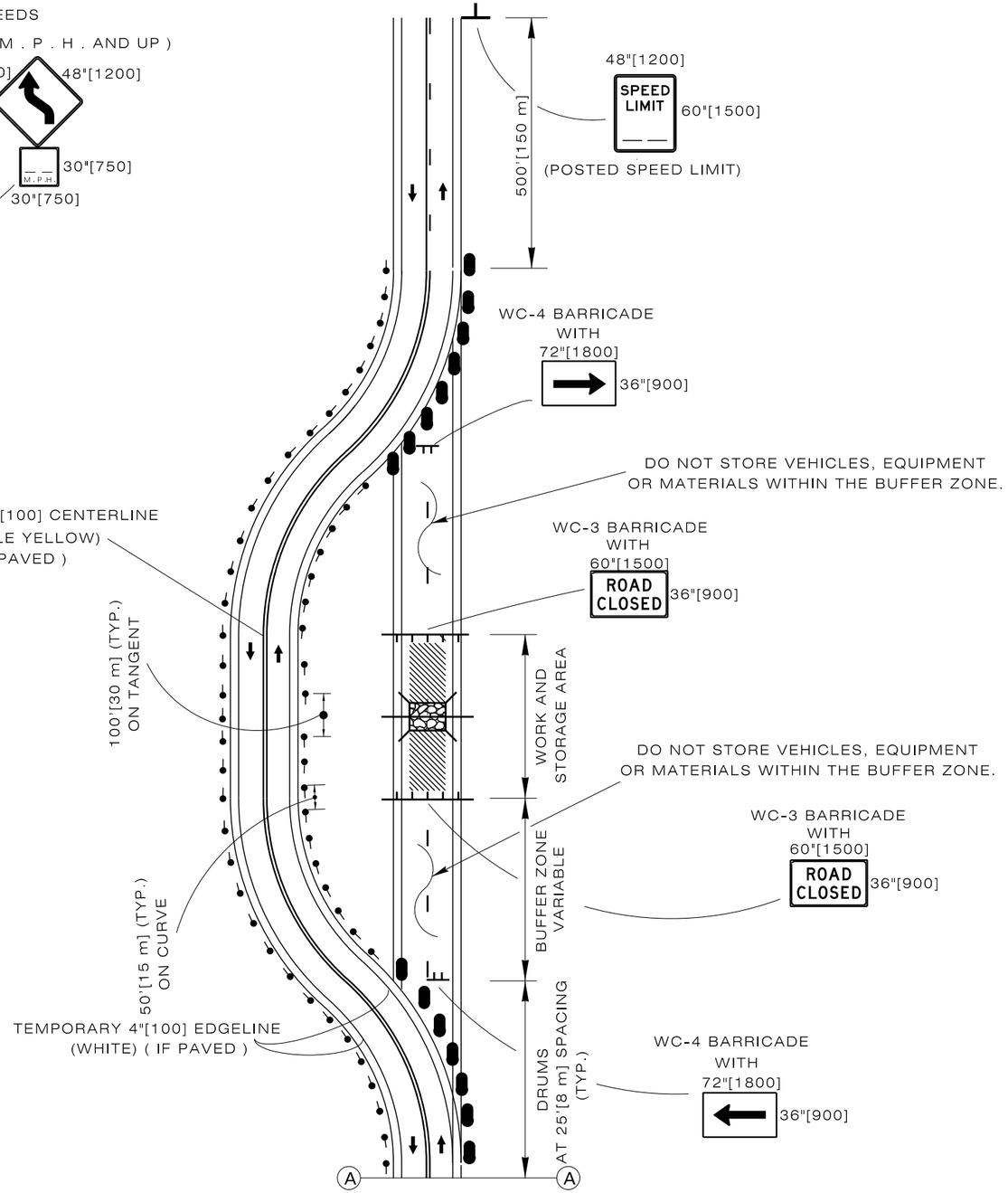

Designed by:	TRAFFIC
Drawn by:	JTG
Checked by:	TRAFFIC
Previous Dwg. No.	703-2D

TYPICAL TRAFFIC CONTROL SIGNING FOR DETOUR AROUND CONSTRUCTION

Note: Units shown in brackets [ ] are metric and are in millimeters (mm) unless other units are shown.

WYOMING DEPARTMENT OF TRANSPORTATION

CONSTRUCTION TRAFFIC CONTROL TWO LANE

STANDARD PLAN

STANDARD PLAN NUMBER
703-2E
SHEET 1 of 6
Issued by: TRAFFIC PROGRAM
Date Issued: OCTOBER, 2014

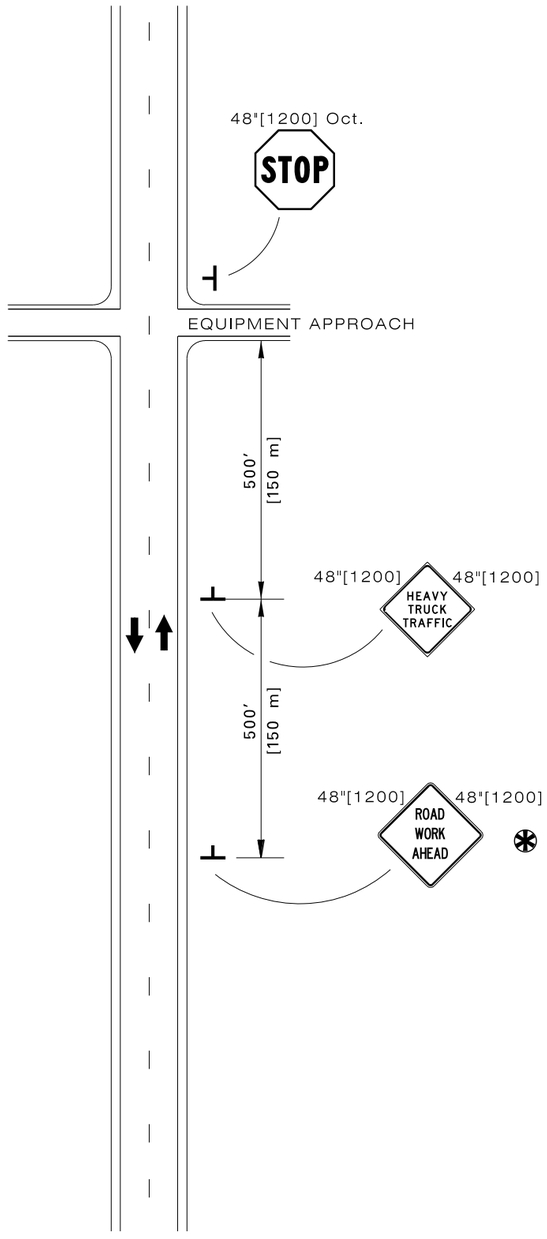

EQUIPMENT CROSSING STOP CONTROL

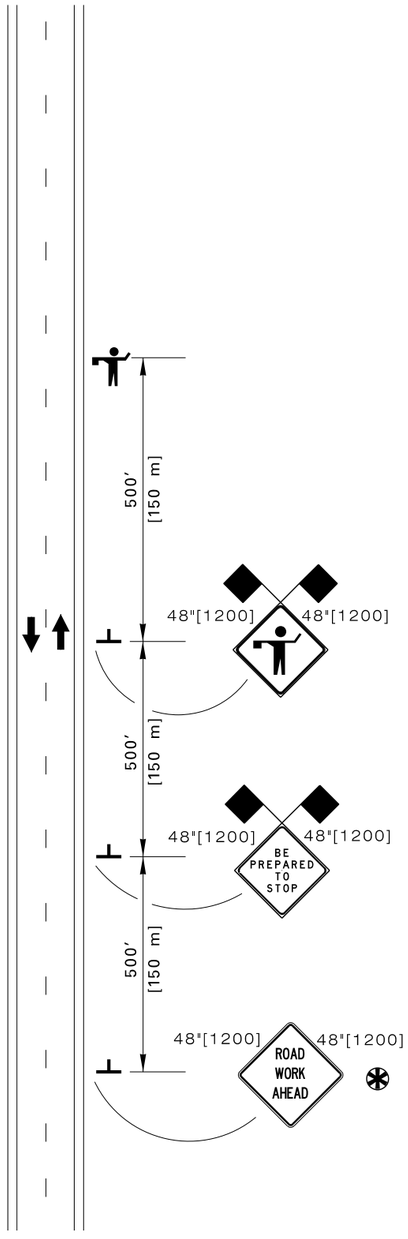

TYPICAL FLAGGER STATION SIGNING

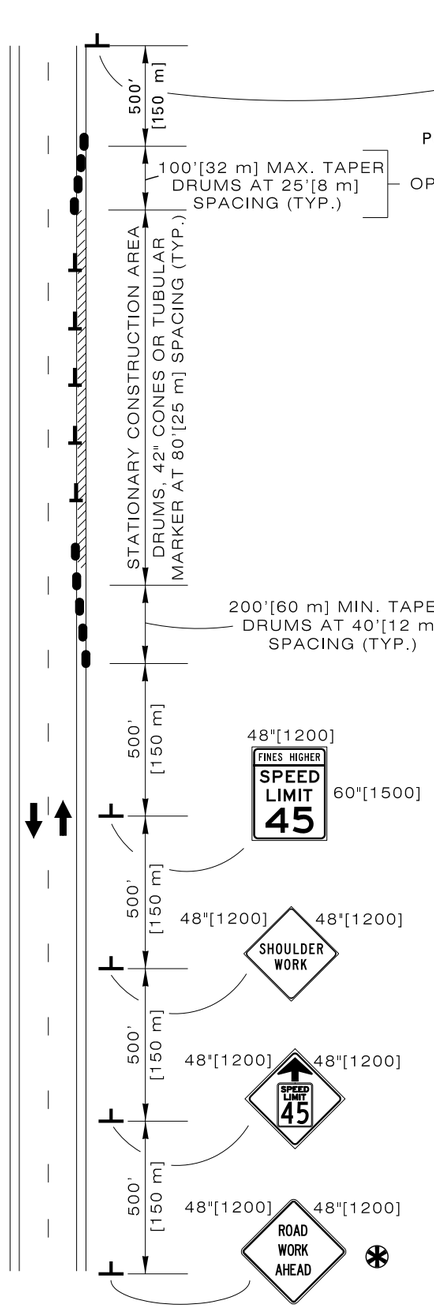

SHOULDER REPAIR WORK 10'[3 m] MIN. LANE WIDTH

LEGEND

- DRUM
- FLAGS
- FLAGGER
- CONSTRUCTION AREA
- DRUM, 42"[1050] CONE OR TUBULAR MARKER

✱ USE ONLY IF NO PREVIOUS "ROAD WORK AHEAD" SIGNS WITHIN 1 MILE [1.6 km], OR IF OUTSIDE OF THE REGULAR CONSTRUCTION AREA.

♦ TYPICAL APPROACH SIGNING, SIGN FOR BOTH DIRECTIONS (SIGNS SHOWN FOR ONE DIRECTION OF TRAVEL ONLY).

Designed by:	TRAFFIC
Drawn by:	JTG
Checked by:	TRAFFIC
Previous Dwg. No.	703-2D

TYPICAL TRAFFIC CONTROL SIGNING

Note: Units shown in brackets [ ] are metric and are in millimeters (mm) unless other units are shown.

WYOMING DEPARTMENT OF TRANSPORTATION

CONSTRUCTION TRAFFIC CONTROL TWO LANE

STANDARD PLAN

STANDARD PLAN NUMBER
703-2E
SHEET 2 of 6
Issued by: TRAFFIC PROGRAM
Date Issued: OCTOBER, 2014

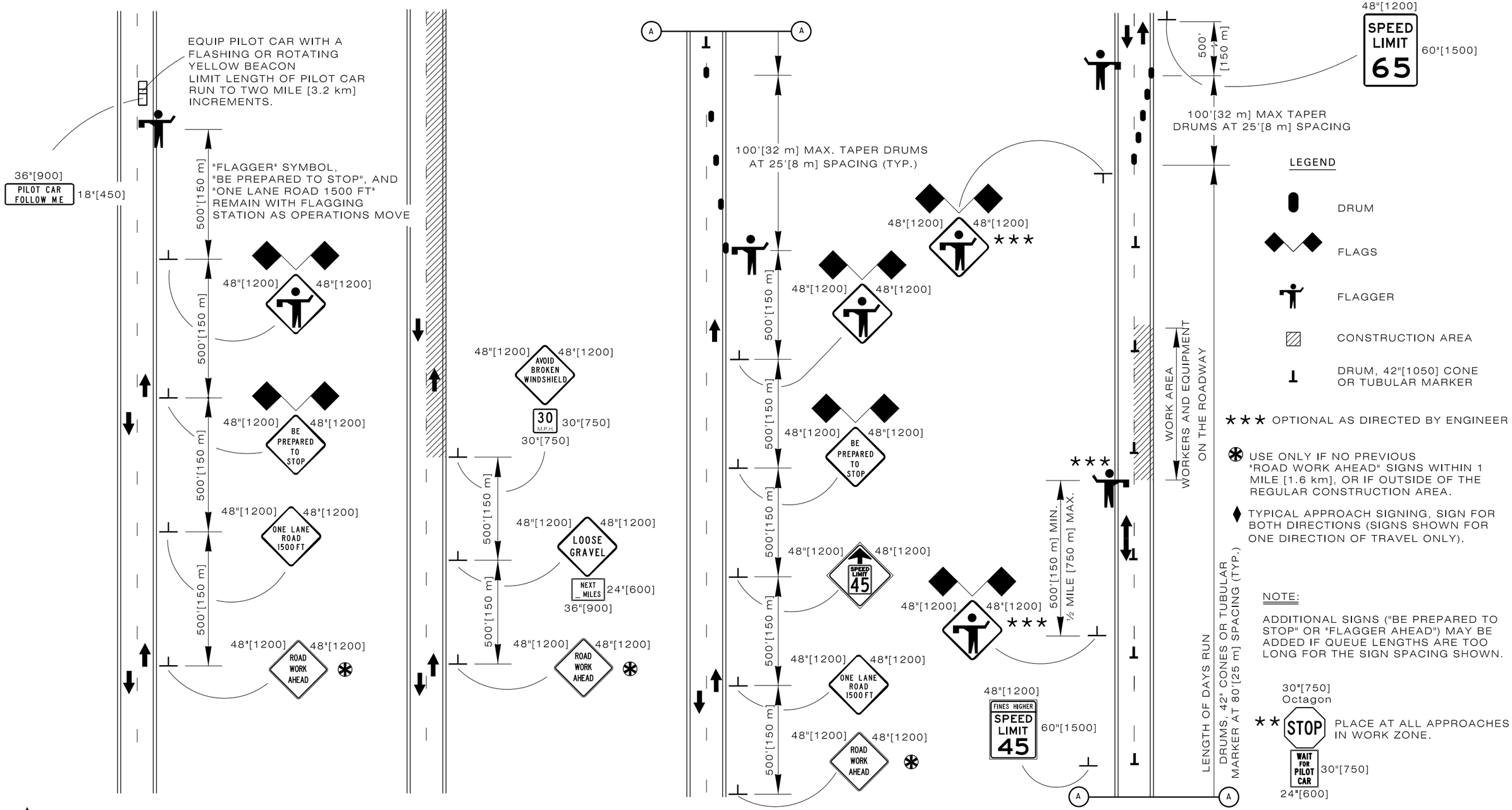

♦ **PILOT CAR OPERATIONS MOBILE OR STATIONARY WORK SITE**

♦ **ROADWAY CHIP SEALING**

♦ **OPERATIONS FOR ONE LANE CLOSURE ON A TWO LANE ROAD**

Designed by: TRAFFIC	
Drawn by: JTG	
Checked by: TRAFFIC	
Previous Dwg. No. 703-2D	TYPICAL TRAFFIC CONTROL SIGNING

Note: Units shown in brackets [ ] are metric and are in millimeters (mm) unless other units are shown.

WYOMING DEPARTMENT OF TRANSPORTATION

CONSTRUCTION TRAFFIC CONTROL TWO LANE

STANDARD PLAN

STANDARD PLAN NUMBER
703-2E
SHEET 3 of 6
Issued by: TRAFFIC PROGRAM
Date Issued: OCTOBER, 2014

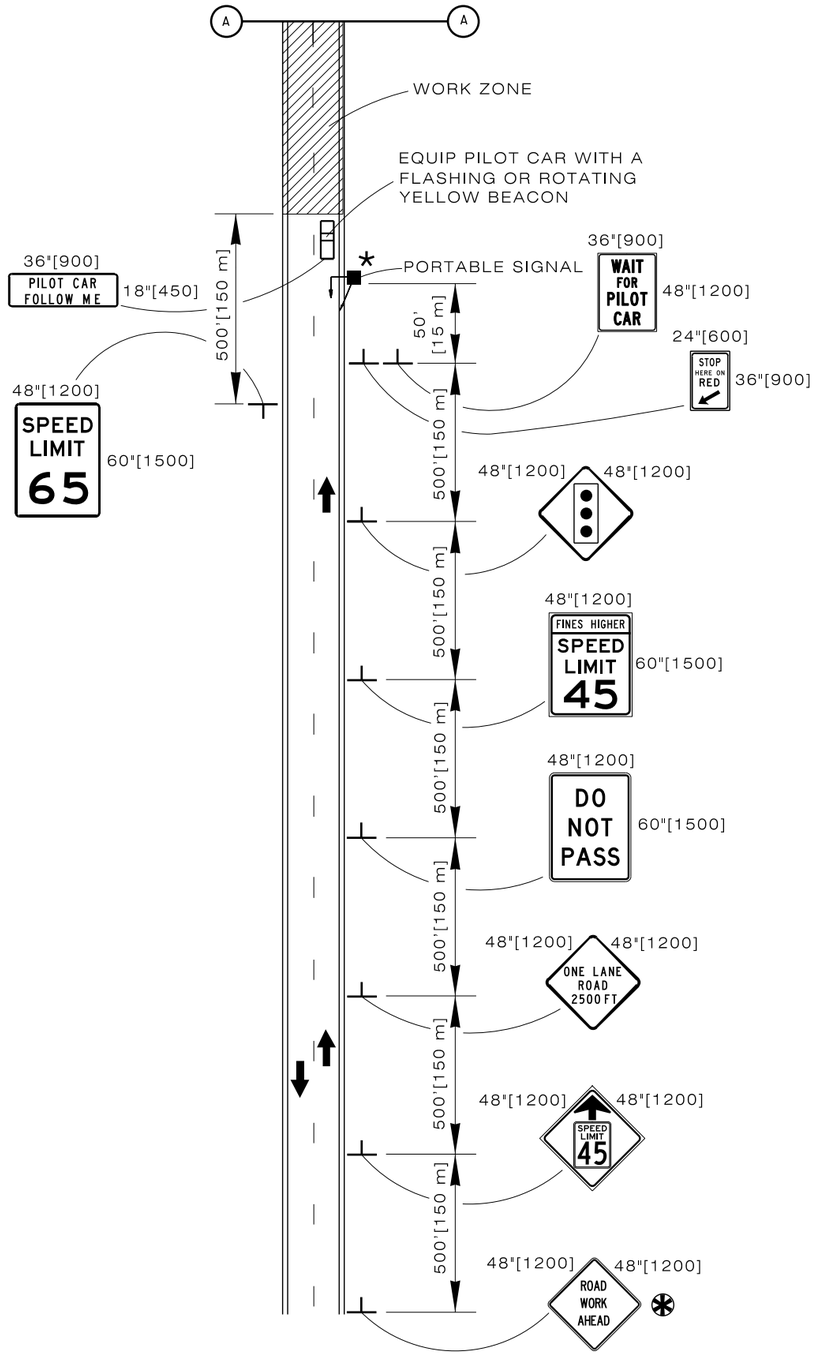

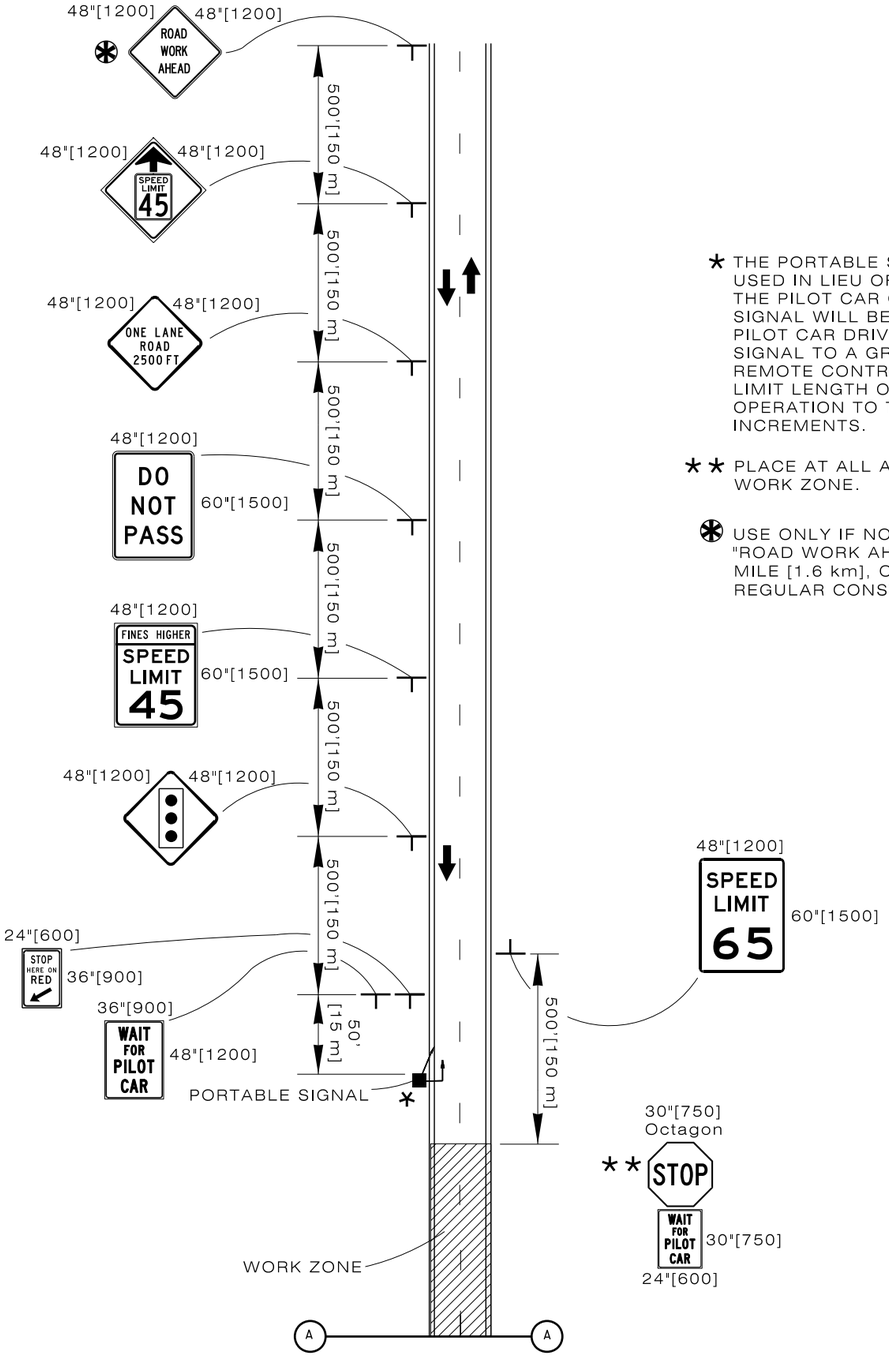

* THE PORTABLE SIGNAL MAY BE USED IN LIEU OF FLAGGERS FOR THE PILOT CAR OPERATION. THE SIGNAL WILL BE RED UNTIL THE PILOT CAR DRIVER CHANGES THE SIGNAL TO A GREEN LIGHT WITH REMOTE CONTROL.
LIMIT LENGTH OF PILOT CAR OPERATION TO TWO MILE [3.2 km] INCREMENTS.

** PLACE AT ALL APPROACHES IN WORK ZONE.

✻ USE ONLY IF NO PREVIOUS "ROAD WORK AHEAD" SIGNS WITHIN 1 MILE [1.6 km], OR IF OUTSIDE OF THE REGULAR CONSTRUCTION AREA.

Designed by:	TRAFFIC
Drawn by:	JTG
Checked by:	TRAFFIC
Previous Dwg. No.	703-2D

TYPICAL SIGNING FOR PILOT CAR WITH PORTABLE SIGNAL

Note: Units shown in brackets [ ] are metric and are in millimeters (mm) unless other units are shown.

WYOMING DEPARTMENT OF TRANSPORTATION

CONSTRUCTION TRAFFIC CONTROL TWO LANE

STANDARD PLAN

STANDARD PLAN NUMBER
703-2E
SHEET 4 of 6
Issued by: TRAFFIC PROGRAM
Date Issued: OCTOBER, 2014

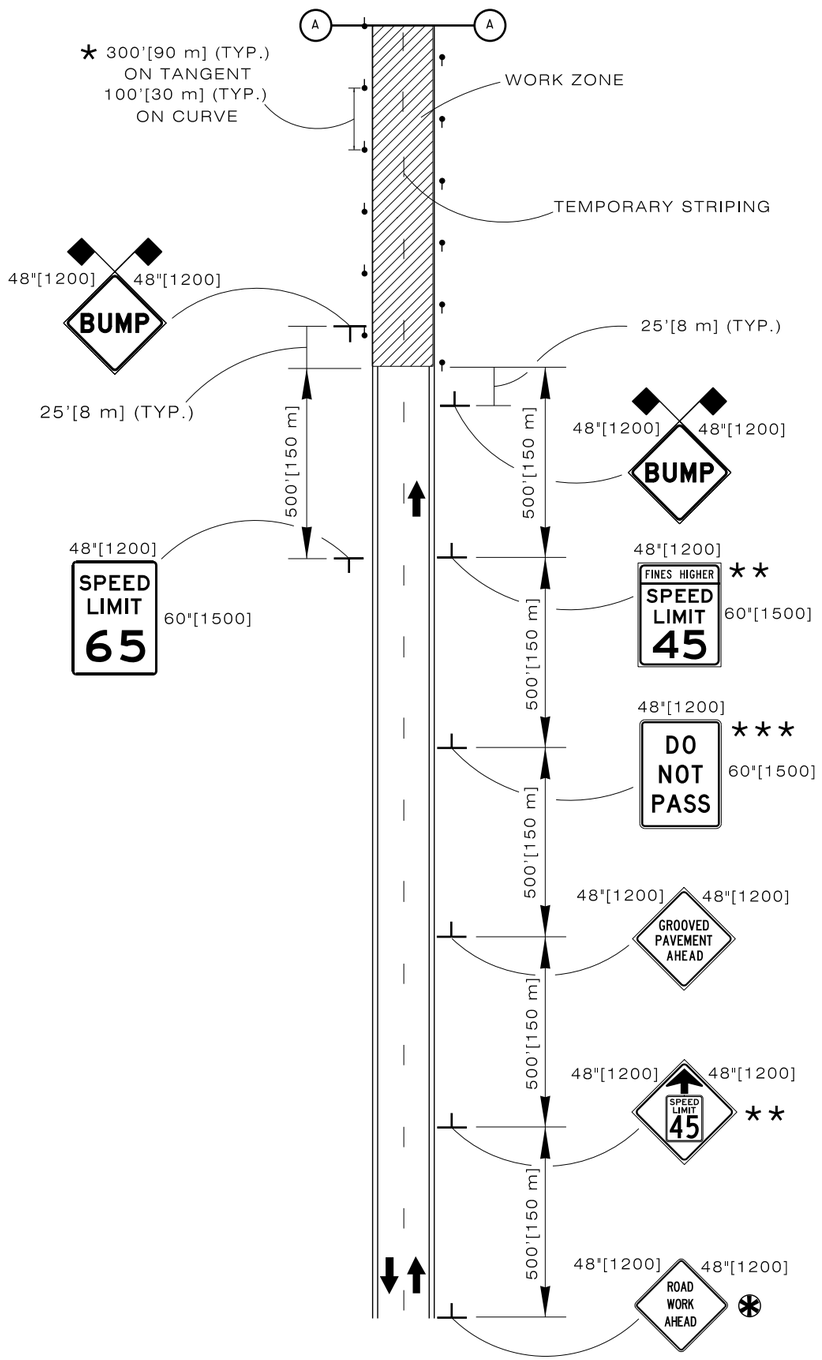

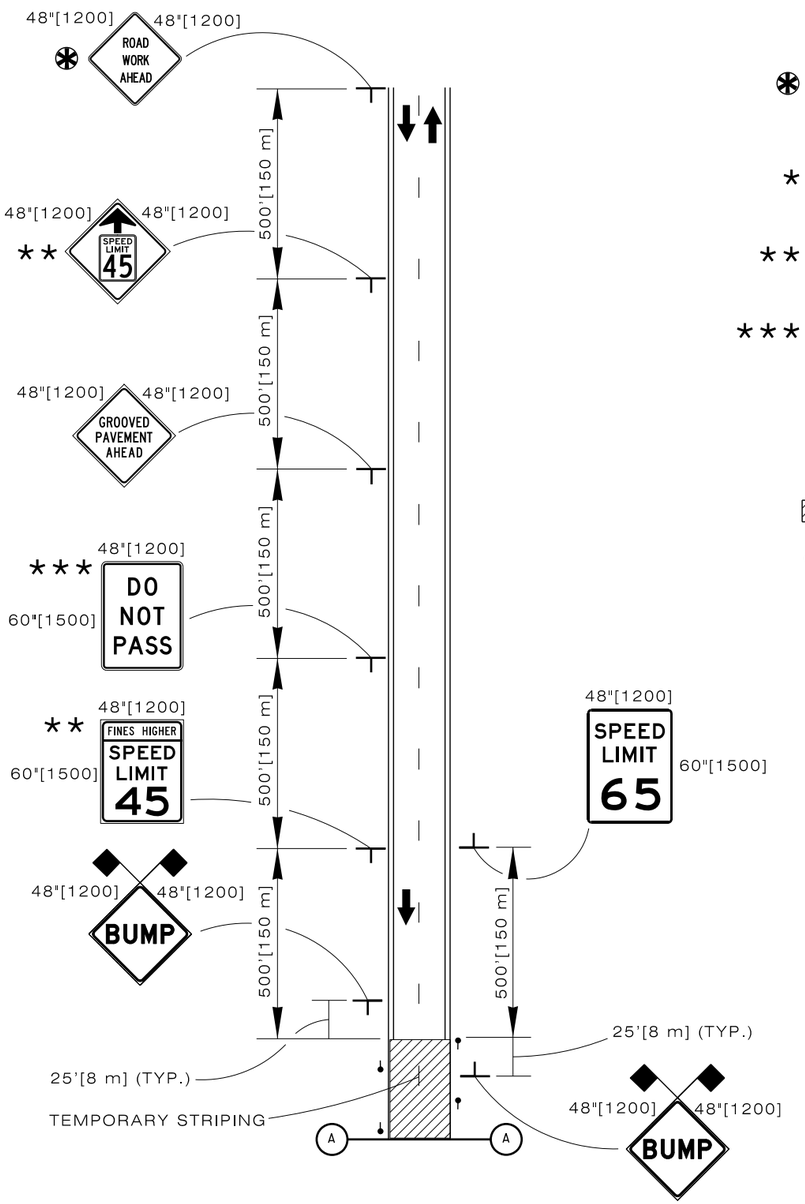

* USE ONLY IF NO PREVIOUS "ROAD WORK AHEAD" SIGNS WITHIN 1 MILE [1.6 km], OR IF OUTSIDE OF THE REGULAR CONSTRUCTION AREA.

* USE TUBULAR MARKERS IN PLACE OF DELINEATORS WHERE DELINEATORS ARE NOT PRESENT.

** SPEED LIMIT TO BE DETERMINED BY THE ENGINEER ACCORDING TO THE CONDITION OF THE MILLED SURFACE.

*** USE IF BARRIERS ARE NOT MARKED.

LEGEND

GROOVED (MILLED) SURFACE

EXISTING DELINEATORS OR TUBULAR MARKERS

Designed by: TRAFFIC	
Drawn by: JTG	
Checked by: TRAFFIC	
Previous Dwg. No. 703-2D	

TYPICAL SIGNING FOR GROOVED (MILLED) PAVEMENT

Note: Units shown in brackets [ ] are metric and are in millimeters (mm) unless other units are shown.

WYOMING DEPARTMENT OF TRANSPORTATION

CONSTRUCTION TRAFFIC CONTROL TWO LANE

STANDARD PLAN

STANDARD PLAN NUMBER
703-2E
SHEET 5 of 6
Issued by: TRAFFIC PROGRAM
Date Issued: OCTOBER, 2014

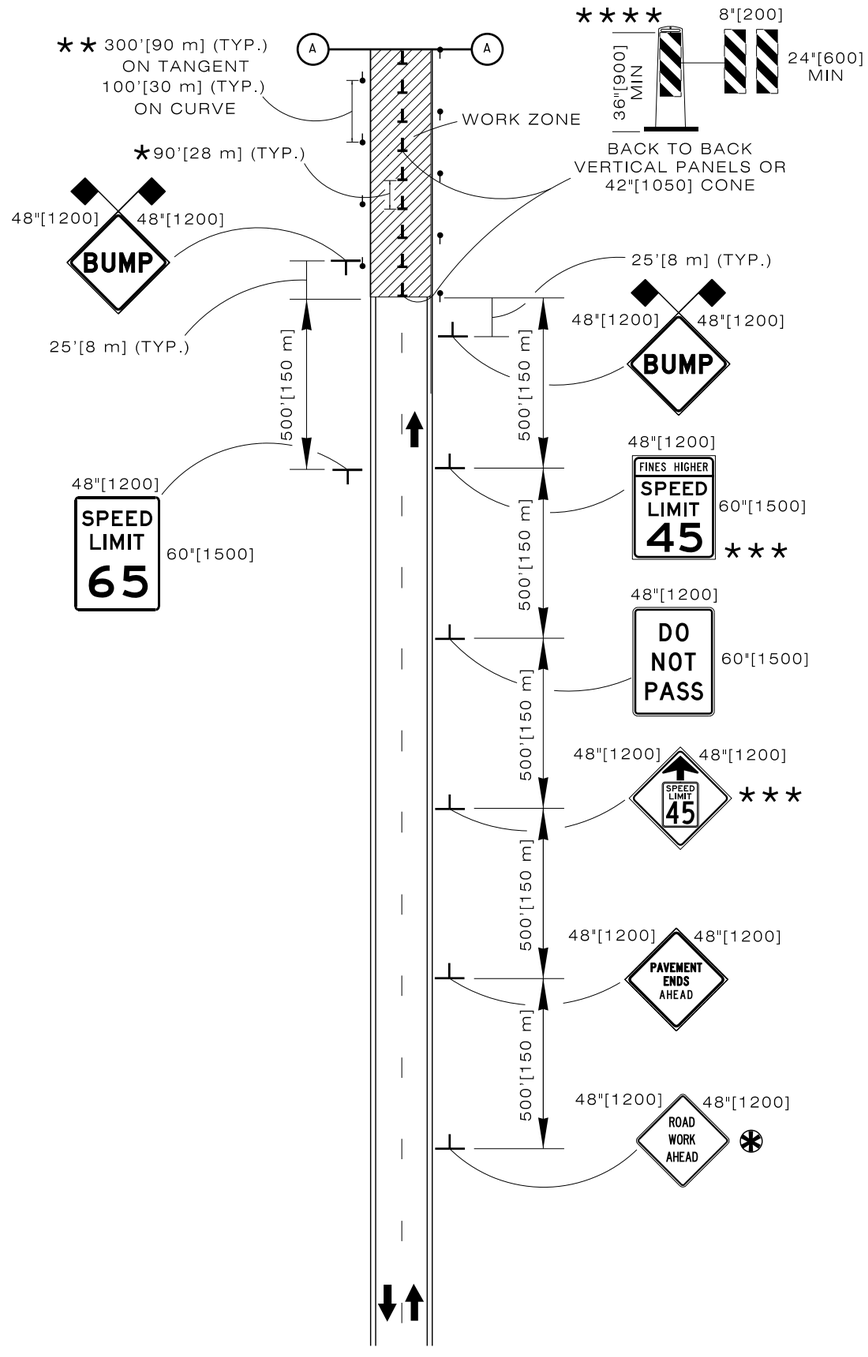

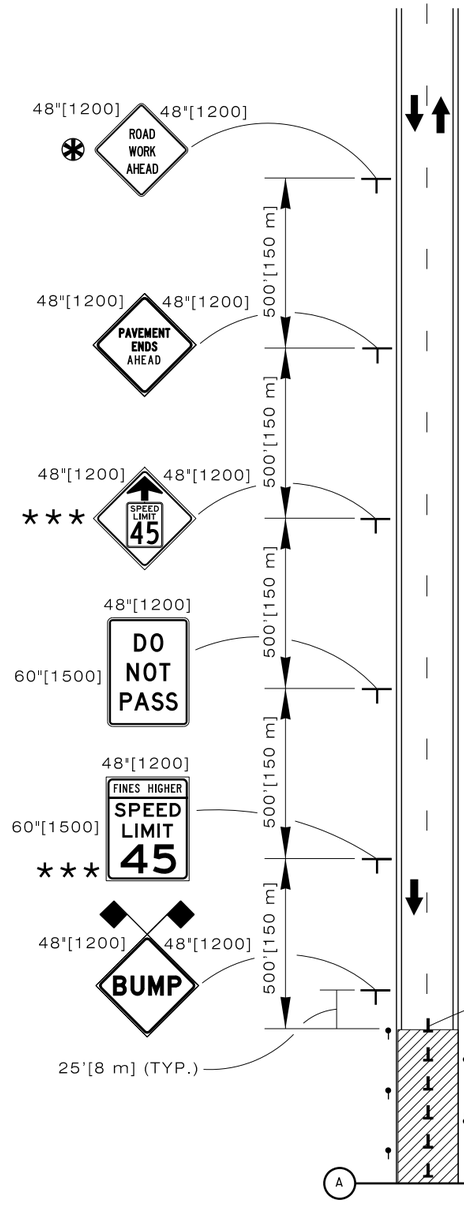

✻ USE ONLY IF NO PREVIOUS "ROAD WORK AHEAD" SIGNS WITHIN 1 MILE [1.6 km], OR IF OUTSIDE OF THE REGULAR CONSTRUCTION AREA.

★ TUBULAR MARKERS MAY BE USED IN PLACE OF 42"[1050] CONES OR VERTICAL PANELS DURING DAY TIME OPERATIONS ONLY.

★★ USE TUBULAR MARKERS IN PLACE OF DELINEATORS WHERE DELINEATORS ARE NOT PRESENT.

★★★ SPEED LIMIT TO BE DETERMINED BY THE ENGINEER ACCORDING TO THE CONDITION OF THE UNPAVED SURFACE.

★★★★ REQUIRED IF SPECIFIED IN CONTRACT.

LEGEND

- DIRT SURFACE
- VERTICAL PANELS OR 42"[1050] CONE
- EXISTING DELINEATORS OR TUBULAR MARKERS

Designed by:	TRAFFIC
Drawn by:	JTG
Checked by:	TRAFFIC
Previous Dwg. No.	703-2D

TYPICAL SIGNING FOR UNPAVED SURFACE

Note: Units shown in brackets [ ] are metric and are in millimeters (mm) unless other units are shown.

WYOMING DEPARTMENT OF TRANSPORTATION

CONSTRUCTION TRAFFIC CONTROL TWO LANE

STANDARD PLAN

STANDARD PLAN NUMBER
703-2E
SHEET 6 of 6
Issued by: TRAFFIC PROGRAM
Date Issued: OCTOBER, 2014

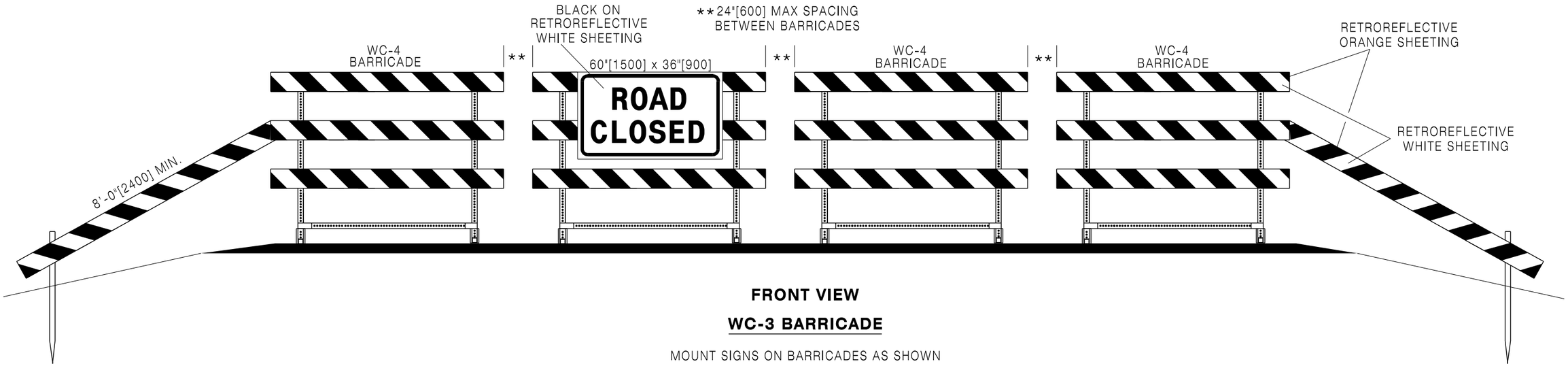

FRONT VIEW

WC-3 BARRICADE

MOUNT SIGNS ON BARRICADES AS SHOWN

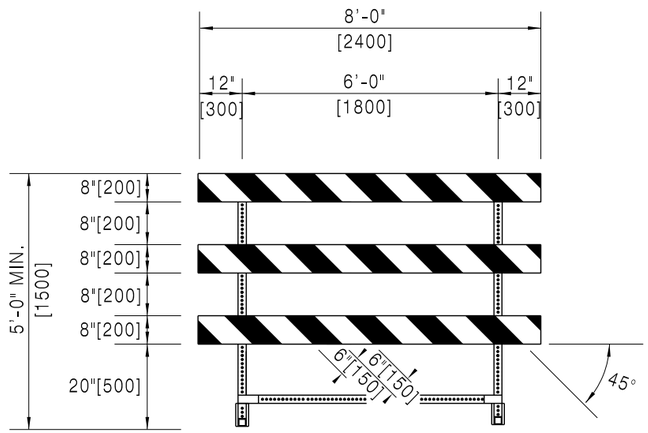

FRONT VIEW

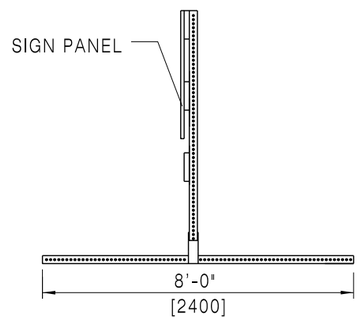

SIDE VIEW

NOTES:

1. Submit support design modifications to the engineer for approval.
2. Slope stripes on WC-3 and WC-4 barricades downward towards the travel way or in the direction which traffic moves when moving by the barricade.

WC-4 BARRICADE

Designed by: TRAFFIC Drawn by: JTG Checked by: TRAFFIC Previous Dwg. No. 703-1E	WC-3 AND WC-4 BARRICADES	WYOMING DEPARTMENT OF TRANSPORTATION	CONSTRUCTION TRAFFIC CONTROL DEVICES STANDARD PLAN	STANDARD PLAN NUMBER 703-1F SHEET 1 of 12 Issued by: TRAFFIC PROGRAM Date Issued: OCTOBER, 2014

Note: Units shown in brackets [ ] are metric and are in millimeters (mm) unless other units are shown.

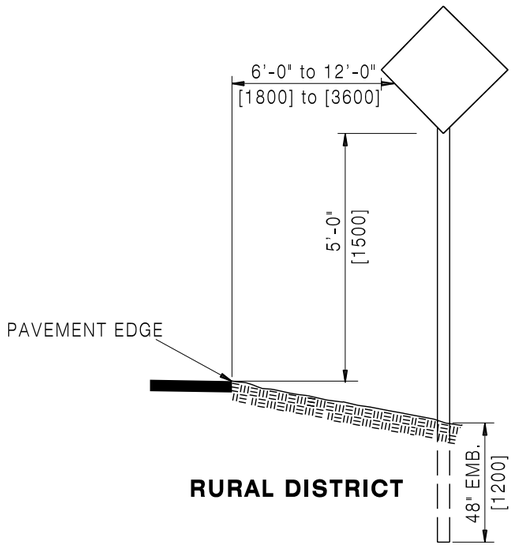

RURAL DISTRICT

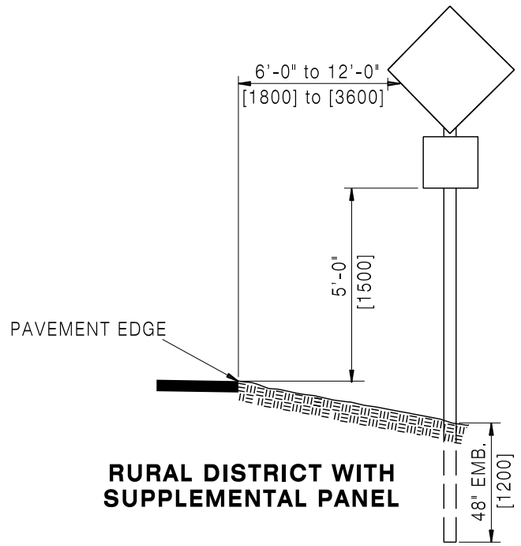

RURAL DISTRICT WITH SUPPLEMENTAL PANEL

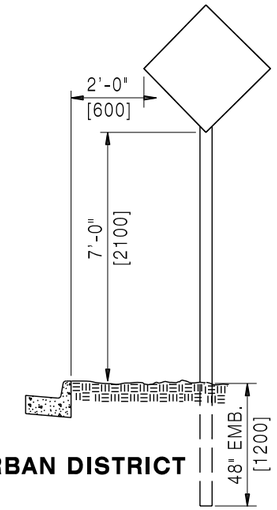

URBAN DISTRICT

SIGN PLACEMENT

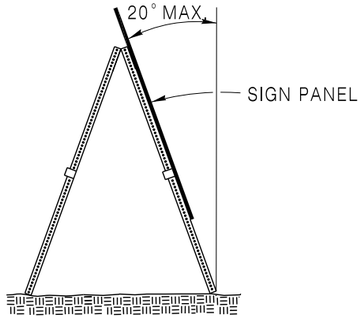

SIDE VIEW

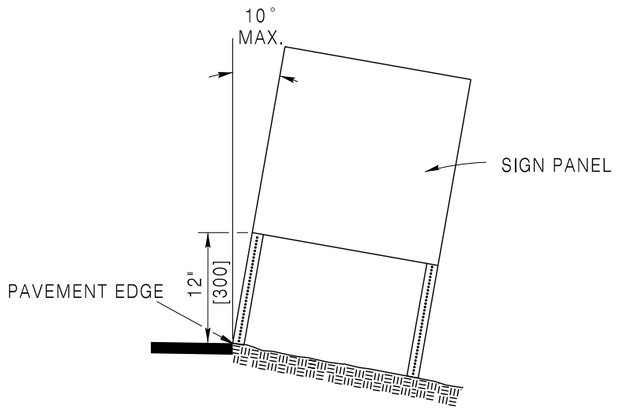

FRONT VIEW

PORTABLE SIGN SUPPORT ORIENTATION

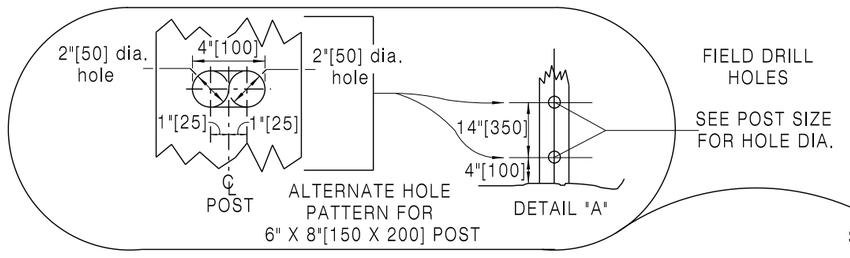

POST SIZE	HOLE DIA.
4" x 4"[100 X 100]	1"[25] Ø
4" x 6"[100 X 150]	2"[50] Ø
6" x 6"[150 X 150]	2 1/2"[64] Ø
6" x 8"[150 X 200]	4"[100] Ø

SIDE

FRONT

BREAK-AWAY TIMBER POST DETAIL

Designed by: TRAFFIC
Drawn by: JTG
Checked by: TRAFFIC
Previous Dwg. No. 703-1E

MISCELLANEOUS SIGNING DETAILS

Note: Units shown in brackets [ ] are metric and are in millimeters (mm) unless other units are shown.

WYOMING DEPARTMENT OF TRANSPORTATION

CONSTRUCTION TRAFFIC CONTROL DEVICES

STANDARD PLAN

STANDARD PLAN NUMBER
703-1F
SHEET 2 of 12
Issued by: TRAFFIC PROGRAM
Date Issued: OCTOBER, 2014

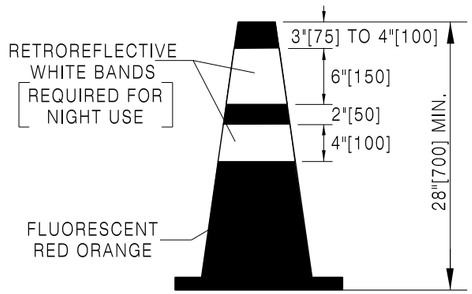

CONE

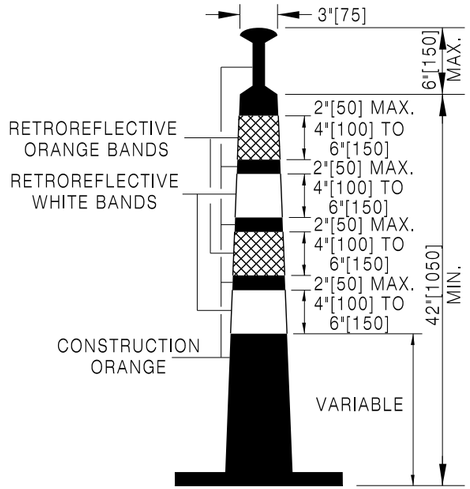

42"[1050] CONE

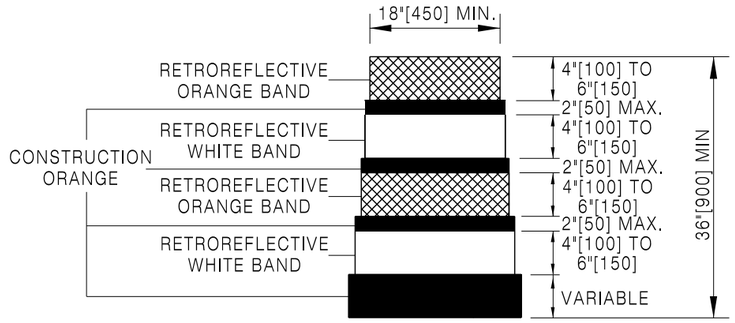

DRUM

CHANNELIZING DEVICES

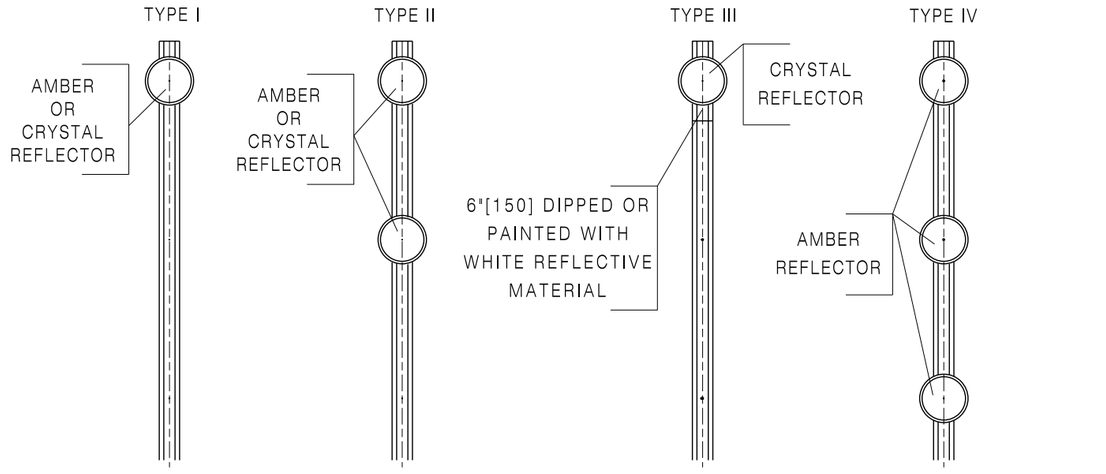

DELINEATORS

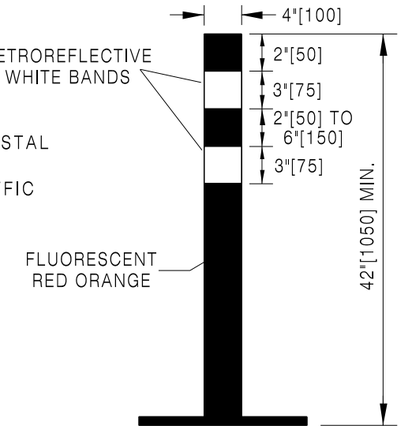

TUBULAR MARKER

DELINEATING DEVICES

Designed by: TRAFFIC	CHANNELIZING AND DELINEATING DEVICES
Drawn by: JTG	
Checked by: TRAFFIC	
Previous Dwg. No. 703-1E	

Note: Units shown in brackets [ ] are metric and are in millimeters (mm) unless other units are shown.

WYOMING DEPARTMENT OF TRANSPORTATION

CONSTRUCTION TRAFFIC CONTROL DEVICES

STANDARD PLAN

STANDARD PLAN NUMBER
703-1F
SHEET 3 of 12
Issued by: TRAFFIC PROGRAM
Date Issued: OCTOBER, 2014

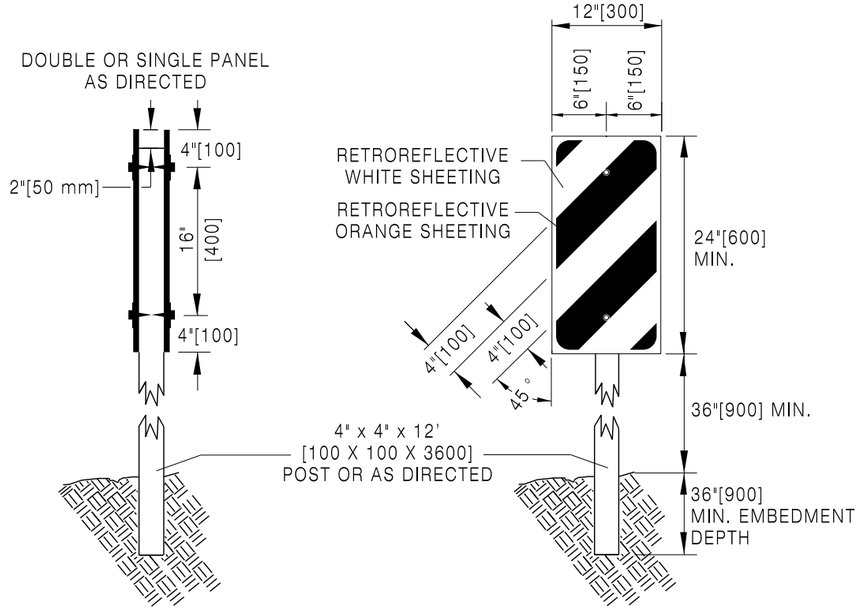

VERTICAL PANELS

Mount vertical panels on wood posts using 1/4 in.[6] X 2 1/2 in.[64] galvanized lag screws and flat washers.

Slope stripes on vertical panels downward towards the travel way or in the direction which traffic moves when moving by the marker.

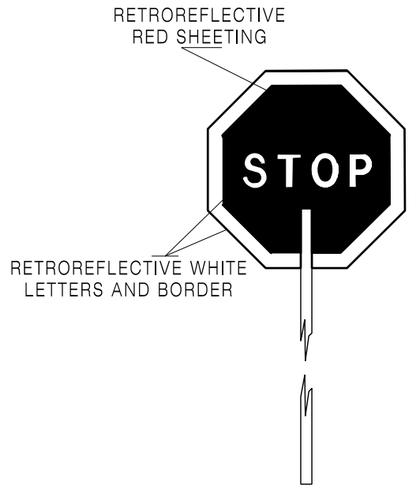

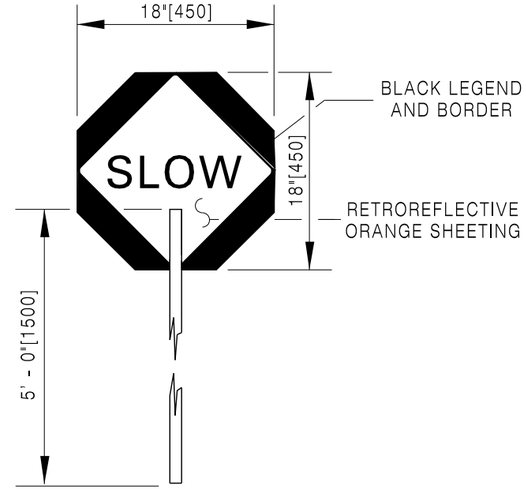

STOP-SLOW PADDLE

LEFT,RIGHT OR DOUBLE ARROW (AS DIRECTED)

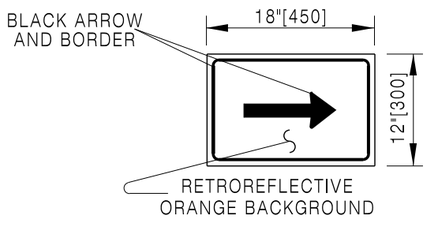

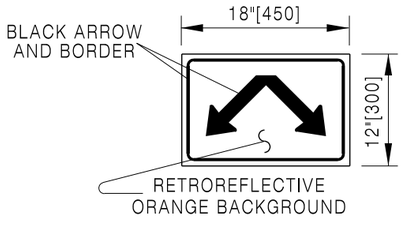

DIRECTIONAL ARROWS

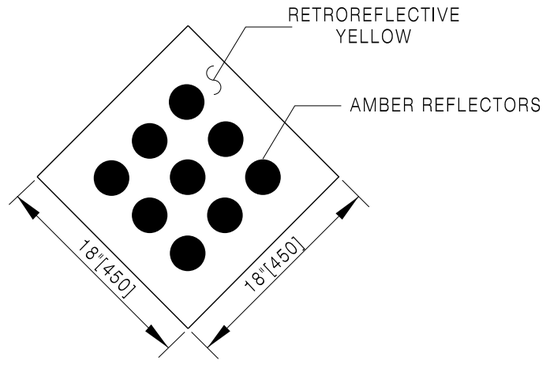

TYPE 1 OBJECT MARKER

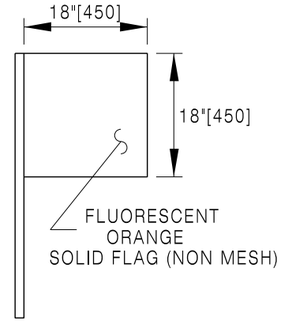

SIGN FLAG DETAIL

Designed by: TRAFFIC Drawn by: JTG Checked by: TRAFFIC Previous Dwg. No. 703-1E	MISCELLANEOUS SIGNING DETAILS	WYOMING DEPARTMENT OF TRANSPORTATION	CONSTRUCTION TRAFFIC CONTROL DEVICES STANDARD PLAN

Note: Units shown in brackets [ ] are metric and are in millimeters (mm) unless other units are shown.

STANDARD PLAN NUMBER
703-1F
SHEET 4 of 12
Issued by: TRAFFIC PROGRAM
Date Issued: OCTOBER, 2014

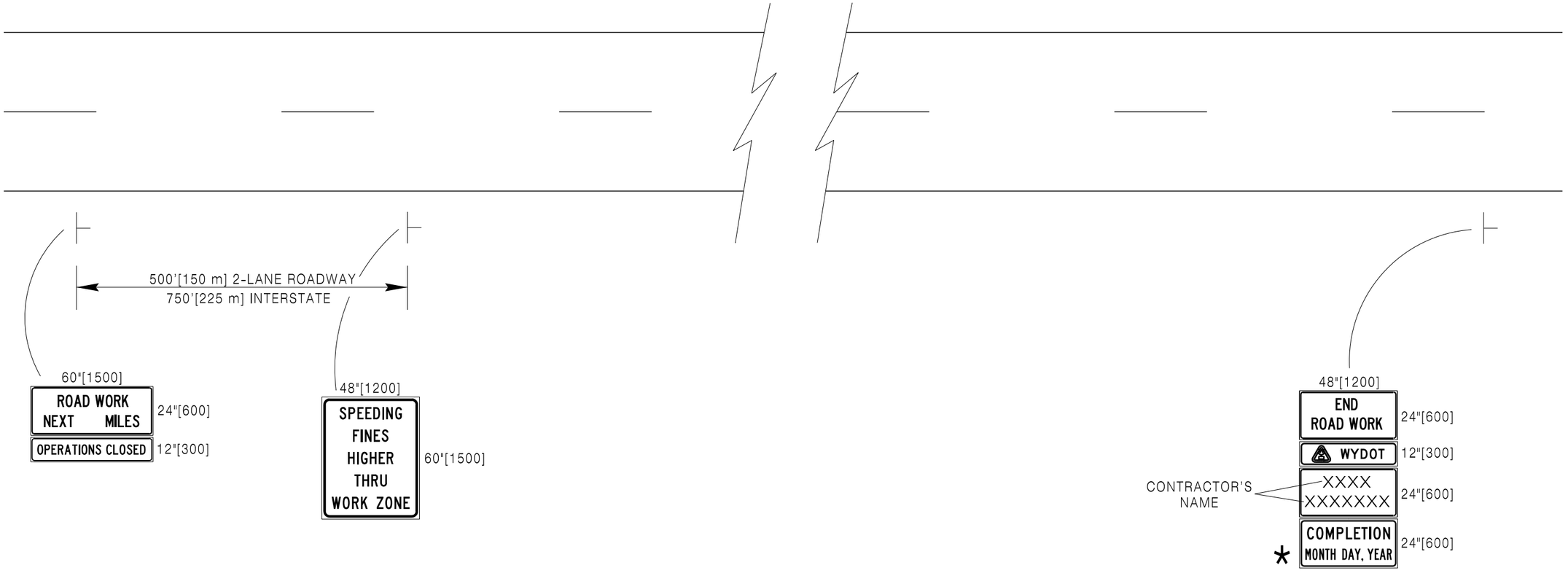

NOTES:

Do not obstruct or detract from the effectiveness of standard construction or permanent signs with these signs. Place signs **500'[150 m] or 750'[225 m]** in advance of any construction or permanent signing. Do not substitute these signs for construction warning or regulatory signs.

Use "OPERATIONS CLOSED" sign as directed by the engineer, when construction ceases for the winter or other periods of suspension.

* This sign signifies the date the project is to be completed. The TRAFFIC PROGRAM of WYDOT furnishes, upon request of the contractor, sign fabrication layout sheets.

Designed by: TRAFFIC Drawn by: JTG Checked by: TRAFFIC Previous Dwg. No. 703-1E	BEGINNING AND ENDING CONSTRUCTION ZONE SIGNING	WYOMING DEPARTMENT OF TRANSPORTATION	CONSTRUCTION TRAFFIC CONTROL DEVICES STANDARD PLAN	STANDARD PLAN NUMBER 703-1F SHEET 5 of 12 Issued by: TRAFFIC PROGRAM Date Issued: OCTOBER, 2014

Note: Units shown in brackets [ ] are metric and are in millimeters (mm) unless other units are shown.

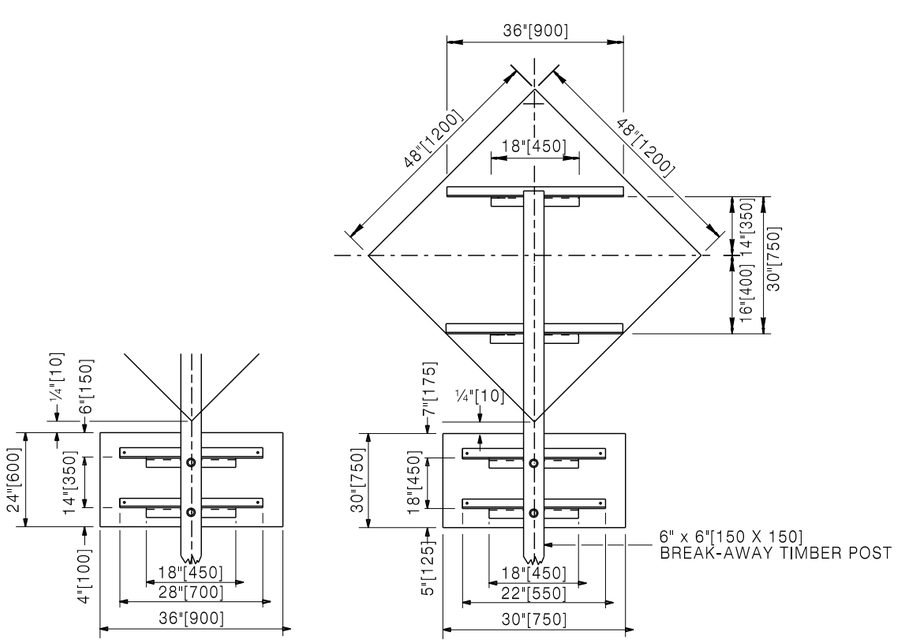

S-1 AND S-1A

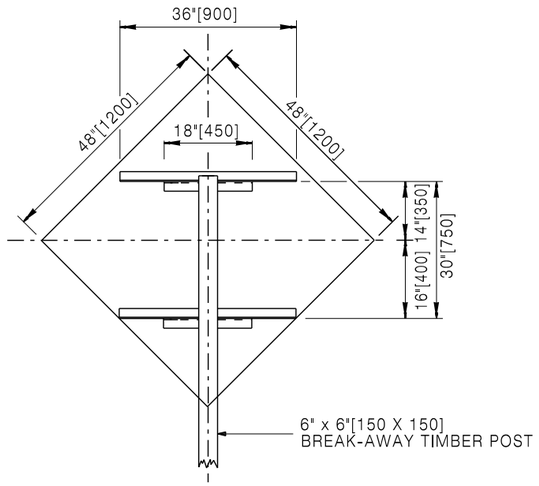

S-2 AND S-2A

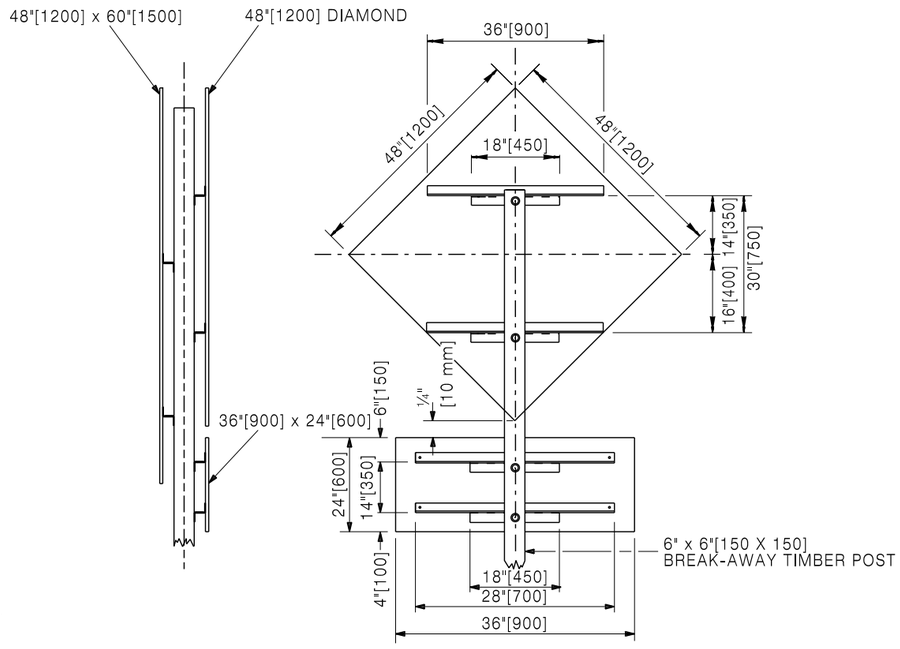

S-3

NOTE:
BACKING ANGLES ARE NOT REQUIRED FOR ONE PIECE 0.125 ALUMINUM OR 1/2" PLYWOOD SIGN PANELS 48" X 60" OR SMALLER.

Designed by: TRAFFIC Drawn by: JTG Checked by: TRAFFIC Previous Dwg. No. 703-1E	SIGN STRUCTURE DETAILS	WYOMING DEPARTMENT OF TRANSPORTATION	**CONSTRUCTION TRAFFIC CONTROL DEVICES** STANDARD PLAN

Note: Units shown in brackets [ ] are metric and are in millimeters (mm) unless other units are shown.

STANDARD PLAN NUMBER
703-1F
SHEET 6 of 12
Issued by: TRAFFIC PROGRAM
Date Issued: OCTOBER, 2014

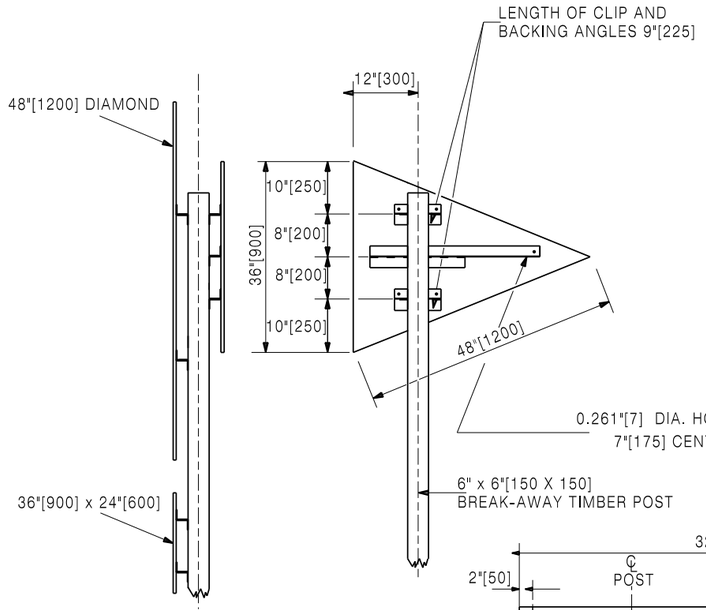

S-4

BACKING ANGLE DETAIL

2" x 2" x 3/16"
[51 X 51 X 4.8]

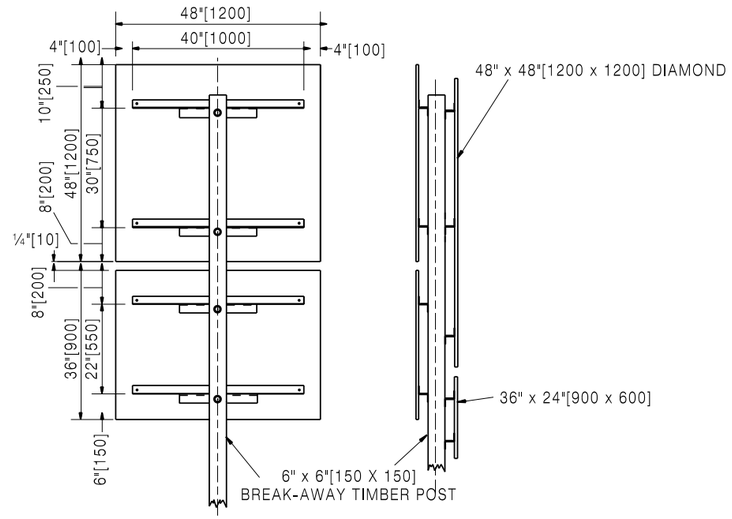

S-5

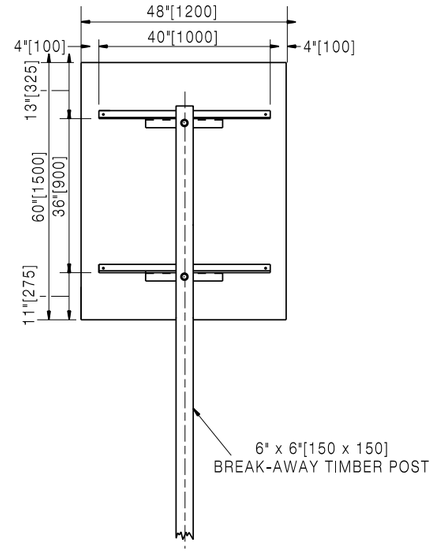

S-6

NOTE:
BACKING ANGLES ARE NOT REQUIRED FOR ONE PIECE 0.125 ALUMINUM OR 1/2" PLYWOOD SIGN PANELS 48" X 60" OR SMALLER.

Designed by: TRAFFIC Drawn by: JTG Checked by: TRAFFIC Previous Dwg. No. 703-1E	SIGN STRUCTURE DETAILS	WYOMING DEPARTMENT OF TRANSPORTATION	**CONSTRUCTION TRAFFIC CONTROL DEVICES** STANDARD PLAN	STANDARD PLAN NUMBER **703-1F** SHEET 7 of 12 Issued by: TRAFFIC PROGRAM Date Issued: OCTOBER, 2014

Note: Units shown in brackets [ ] are metric and are in millimeters (mm) unless other units are shown.

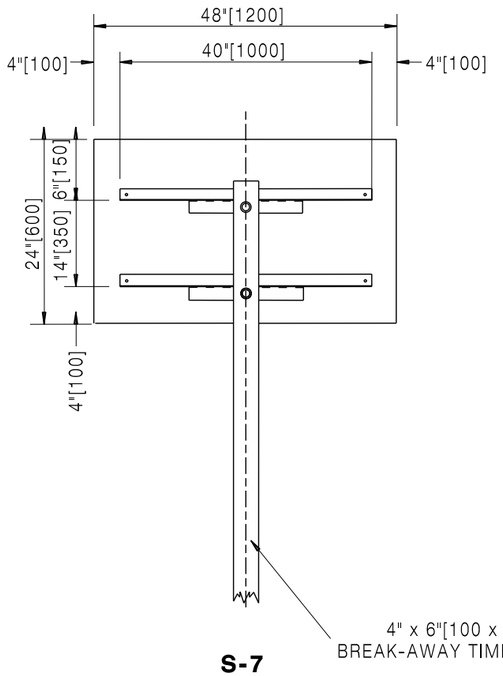

S-7

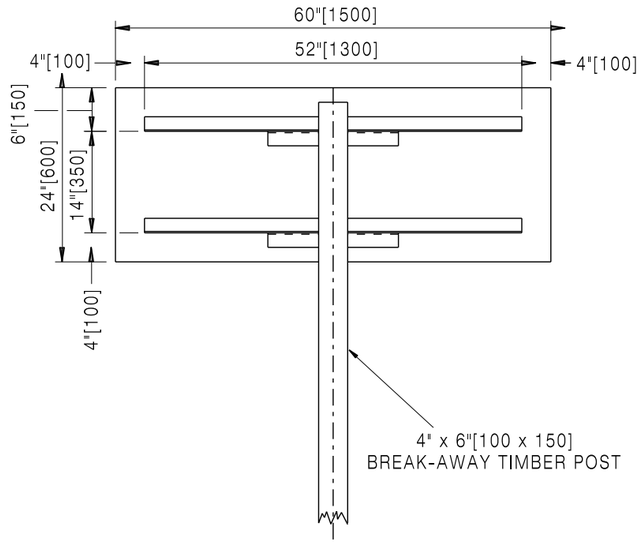

S-10

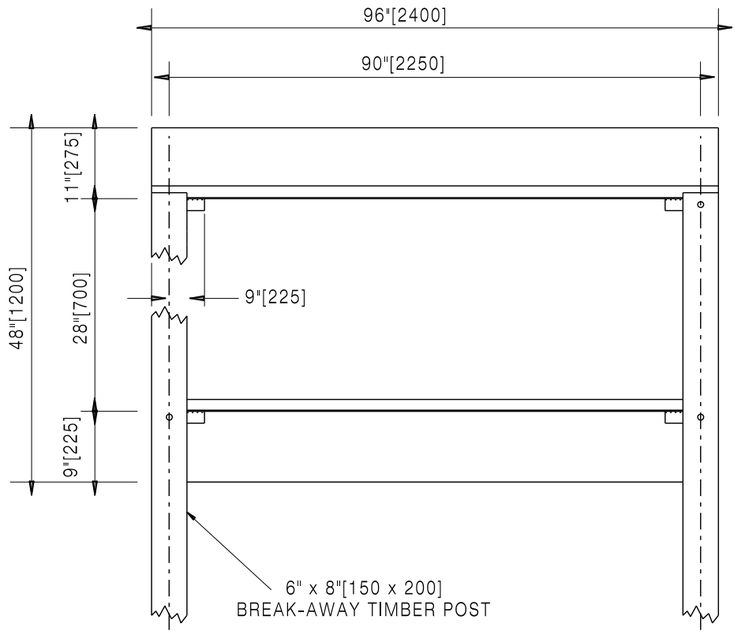

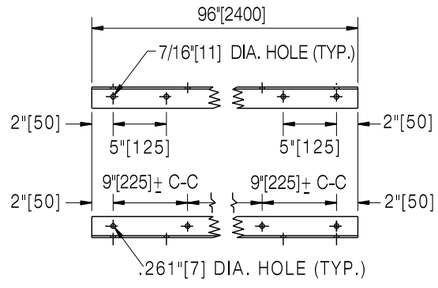

BACKING ANGLE
DETAIL

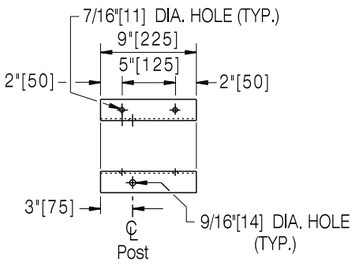

9"[225] CLIP ANGLE
DETAIL

S-11

NOTE:
BACKING ANGLES ARE NOT REQUIRED FOR ONE PIECE 0.125 ALUMINUM OR 1/2" PLYWOOD SIGN PANELS 48" X 60" OR SMALLER.

Designed by: TRAFFIC Drawn by: JTG Checked by: TRAFFIC Previous Dwg. No. 703-1E	SIGN STRUCTURE DETAILS	WYOMING DEPARTMENT OF TRANSPORTATION	**CONSTRUCTION TRAFFIC CONTROL DEVICES** STANDARD PLAN

Note: Units shown in brackets [ ] are metric and are in millimeters (mm) unless other units are shown.

STANDARD PLAN NUMBER
703-1F
SHEET 8 of 12
Issued by: TRAFFIC PROGRAM
Date Issued: OCTOBER, 2014

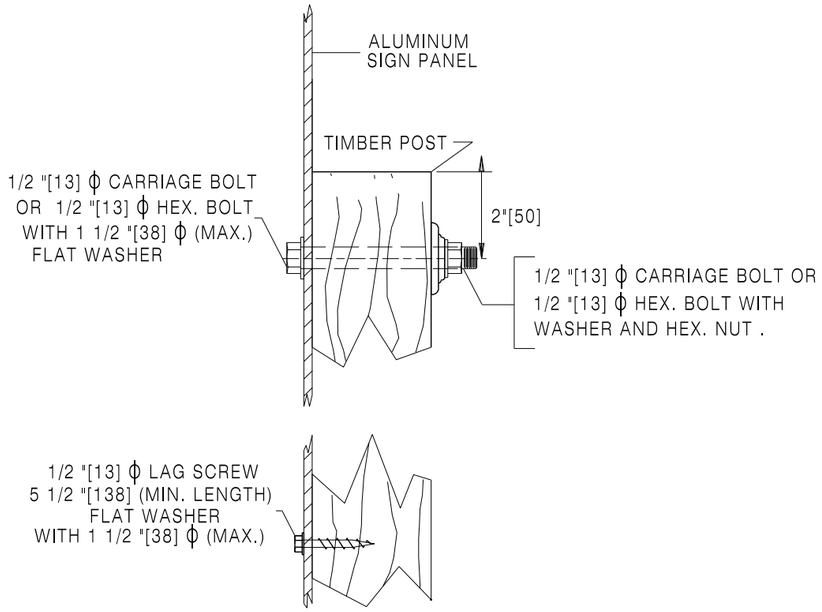

PANEL MOUNTING
SIDE VIEW ALUMINUM
WITHOUT BACKING ANGLES

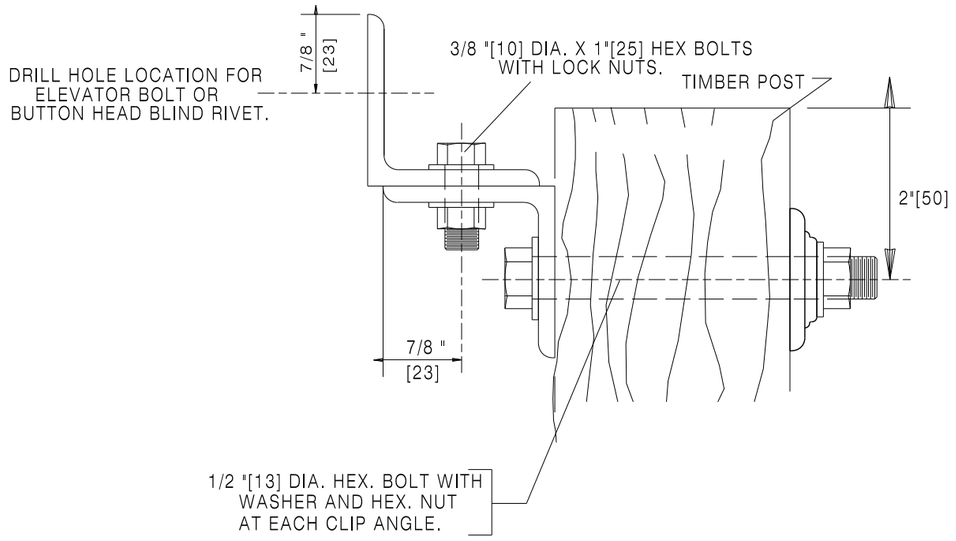

BACKING ANGLE AND CLIP ANGLE
MOUNTING DETAIL

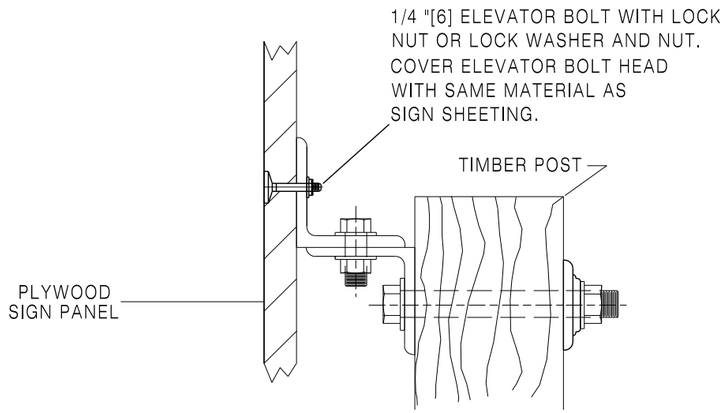

PANEL MOUNTING
SIDE VIEW PLYWOOD

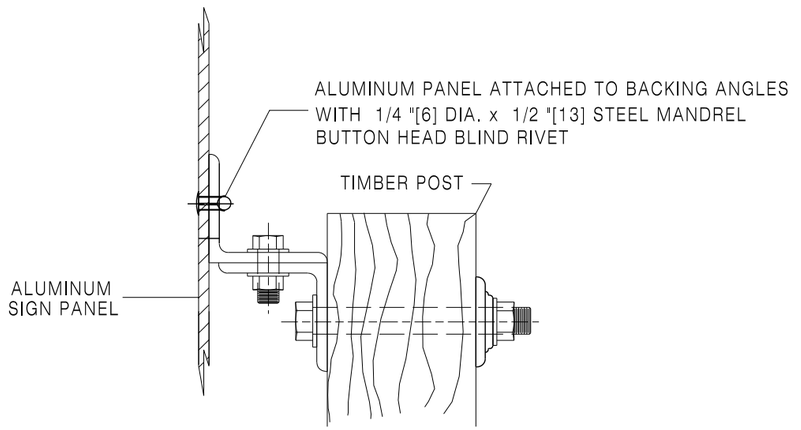

PANEL MOUNTING
SIDE VIEW ALUMINUM

Designed by: TRAFFIC	SIGN STRUCTURE DETAILS
Drawn by: JTG	
Checked by: TRAFFIC	
Previous Dwg. No. 703-1E	

Note: Units shown in brackets [ ] are metric and are in millimeters (mm) unless other units are shown.

WYOMING DEPARTMENT OF TRANSPORTATION

CONSTRUCTION TRAFFIC CONTROL DEVICES

STANDARD PLAN

STANDARD PLAN NUMBER
703-1F
SHEET 9 of 12
Issued by: TRAFFIC PROGRAM
Date Issued: OCTOBER, 2014

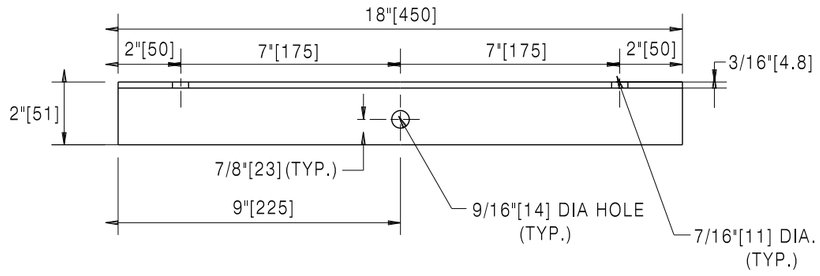

CLIP ANGLE

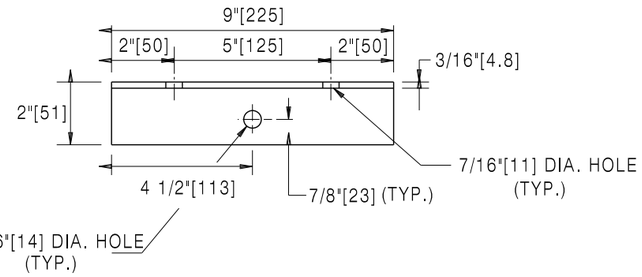

CLIP ANGLE

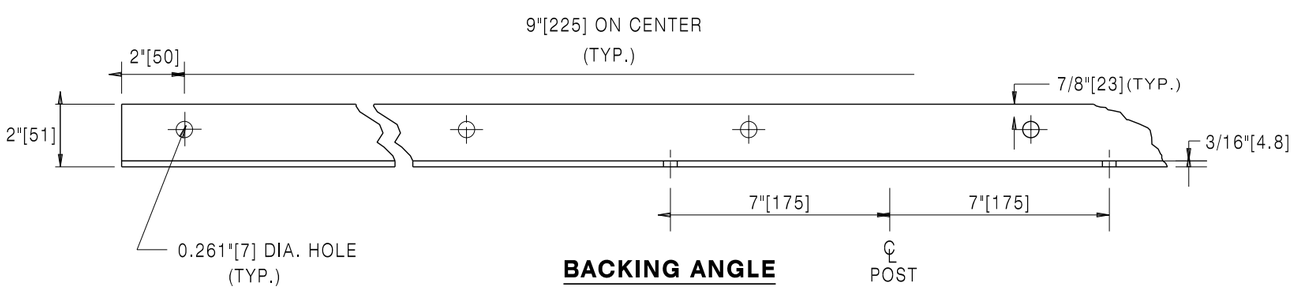

BACKING ANGLE

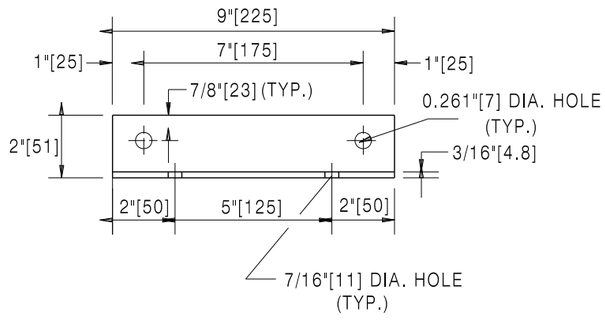

BACKING ANGLE

BACKING ANGLE OR CLIP ANGLE DETAILS

Designed by: TRAFFIC Drawn by: JTG Checked by: TRAFFIC Previous Dwg. No. 703-1E	SIGN STRUCTURE DETAILS	WYOMING DEPARTMENT OF TRANSPORTATION	**CONSTRUCTION TRAFFIC CONTROL DEVICES** STANDARD PLAN
Note: Units shown in brackets [ ] are metric and are in millimeters (mm) unless other units are shown.			STANDARD PLAN NUMBER **703-1F** SHEET 10 of 12 Issued by: TRAFFIC PROGRAM Date Issued: OCTOBER, 2014

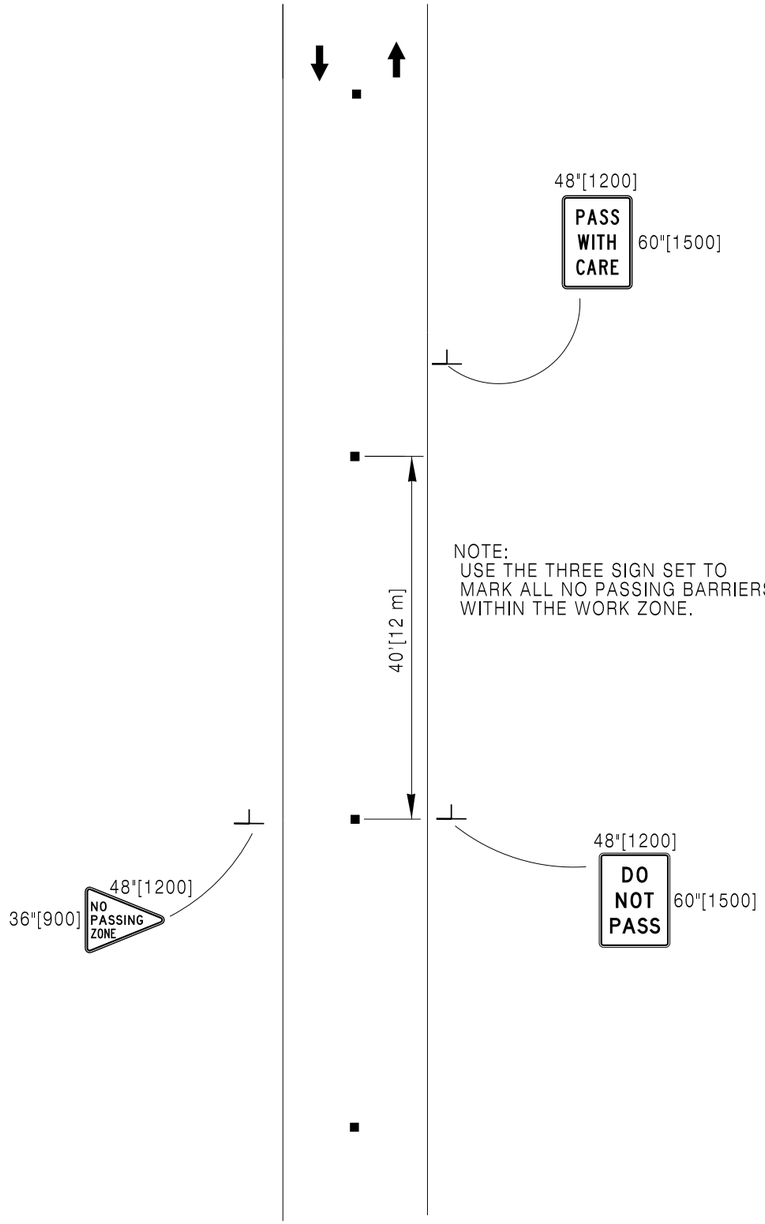

2 LANE 2-WAY ROADWAYS USING RAISED PAVEMENT MARKERS OR MOTORIST GUIDANCE MARKERS, CENTERLINE AND THREE SIGN SEQUENCE, INCLUDING NO-PASSING ZONE

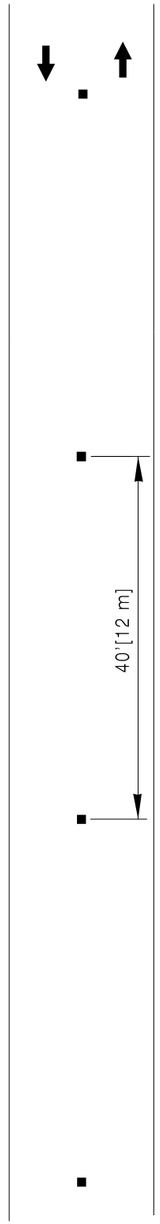

2 LANE 2-WAY ROADWAY (CENTER LINE) USING RAISED PAVEMENT MARKERS OR MOTORIST GUIDANCE MARKERS

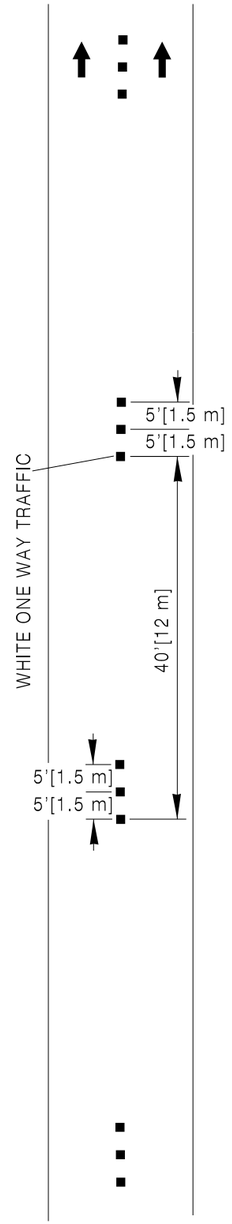

INTERSTATE (LANE LINE) USING RAISED PAVEMENT MARKERS

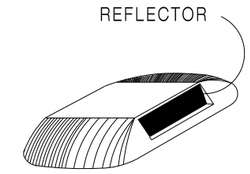

2" x 4"[50 x 100] TEMPORARY RAISED PAVEMENT MARKERS

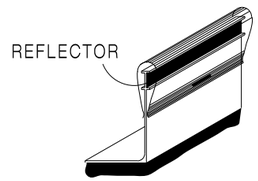

MOTORIST GUIDANCE MARKERS

LEGEND

■ TEMPORARY MARKERS

Designed by: TRAFFIC	FINAL SURFACE TREATMENT TEMPORARY PAVEMENT MARKERS
Drawn by: JTG	
Checked by: TRAFFIC	
Previous Dwg. No. 703-1E	

Note: Units shown in brackets [ ] are metric and are in millimeters (mm) unless other units are shown.

WYOMING DEPARTMENT OF TRANSPORTATION

CONSTRUCTION TRAFFIC CONTROL DEVICES

STANDARD PLAN

STANDARD PLAN NUMBER
703-1F
SHEET 11 of 12
Issued by: TRAFFIC PROGRAM
Date Issued: OCTOBER, 2014

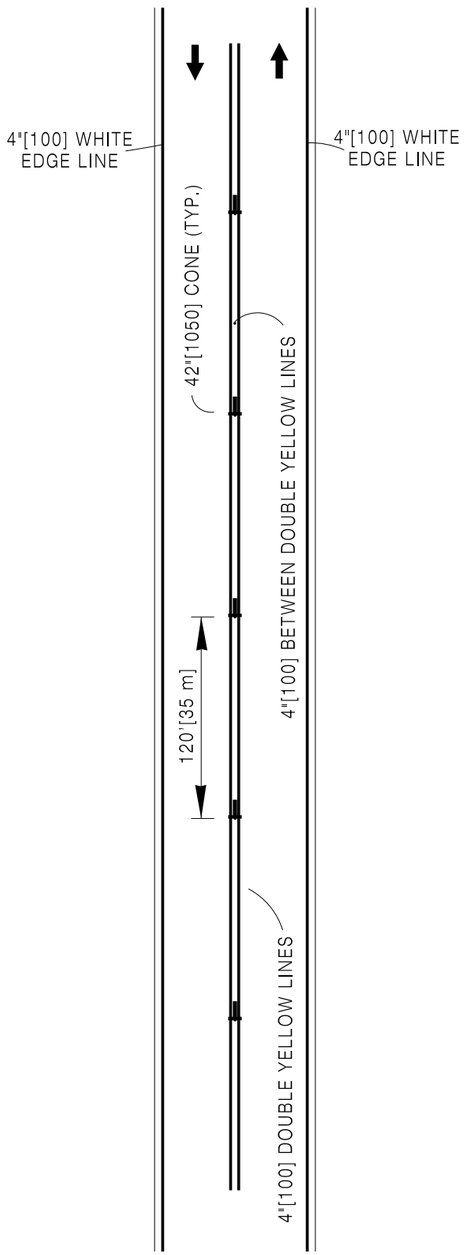

ONE LANE OF INTERSTATE
(2 LANE 2-WAY DURING CONSTRUCTION)
TEMPORARY STRIPING TAPE OR PAINT

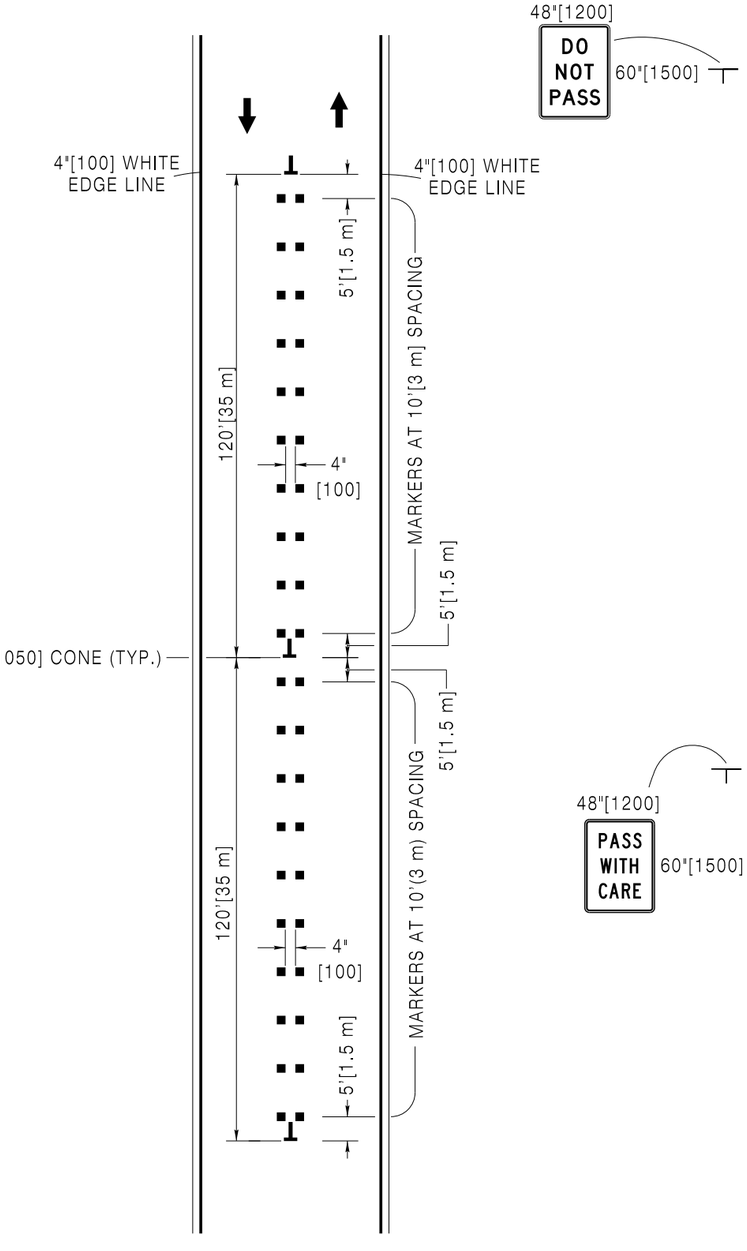

ONE LANE OF INTERSTATE
(2 LANE 2-WAY DURING CONSTRUCTION)
RAISED PAVEMENT MARKERS
DOUBLE SIDE (YELLOW)

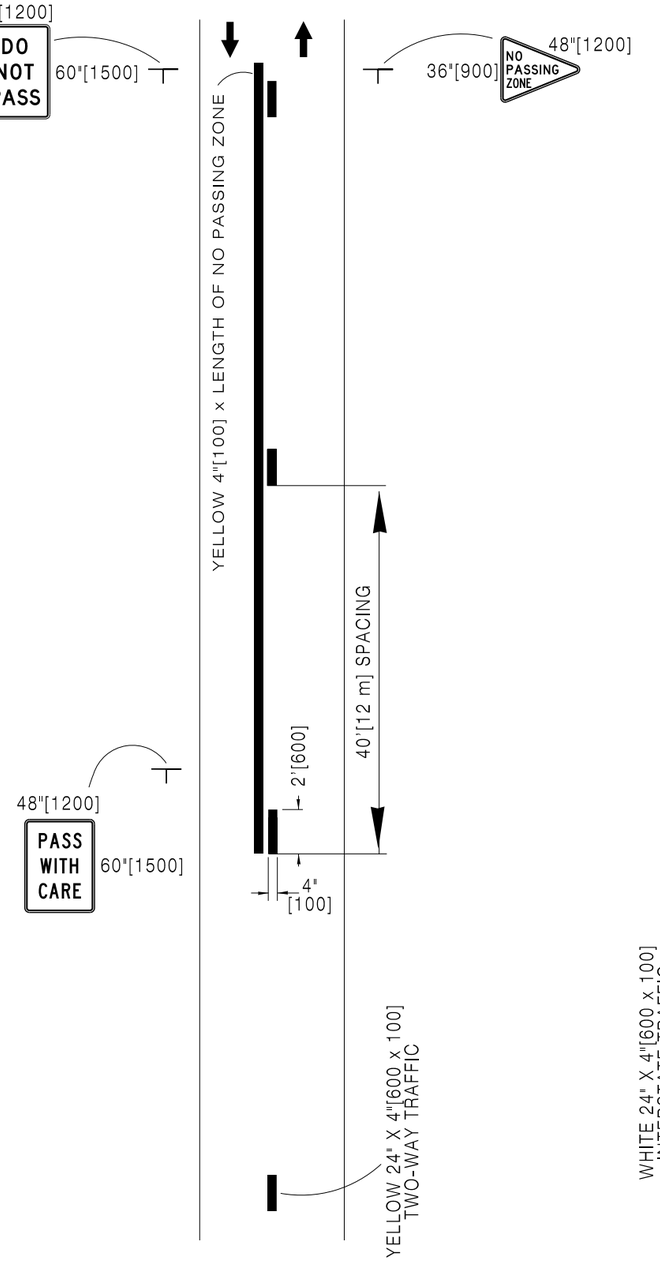

2 LANE 2-WAY ROADWAY
USING TEMPORARY STRIPING TAPE OR
PAINT CENTERLINE AND SOLID LINES
INCLUDING NO-PASSING ZONE

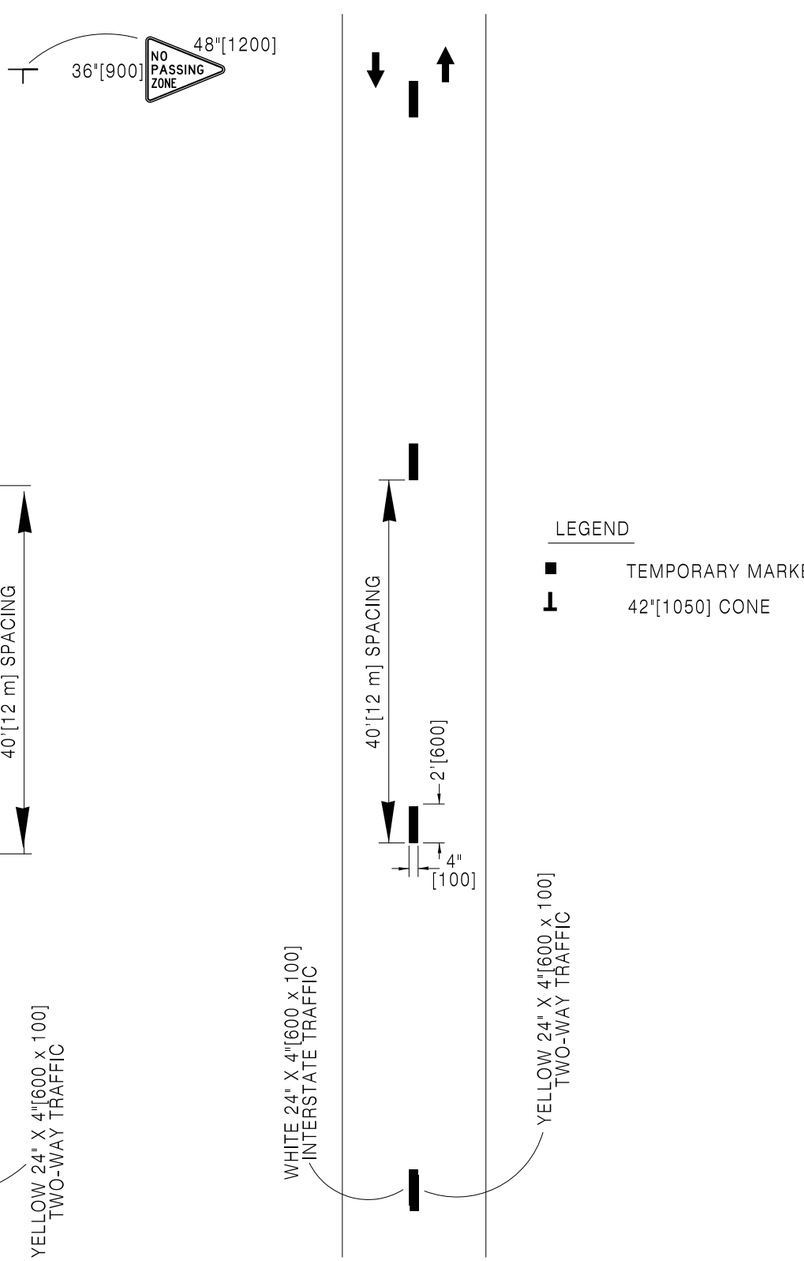

2 LANE 2-WAY ROADWAY
(CENTER LINE) OR INTERSTATE
(LANE LINE) USING TEMPORARY
STRIPING TAPE OR PAINT

LEGEND

- TEMPORARY MARKERS
- 42"[1050] CONE

Designed by: TRAFFIC	
Drawn by: JTG	
Checked by: TRAFFIC	
Previous Dwg. No. 703-1E	

INTERMEDIATE LIFT
TEMPORARY PAVEMENT MARKERS

Note: Units shown in brackets [ ] are metric and are in millimeters (mm) unless other units are shown.

WYOMING DEPARTMENT OF TRANSPORTATION

CONSTRUCTION TRAFFIC CONTROL DEVICES

STANDARD PLAN

STANDARD PLAN NUMBER
703-1F
SHEET 12 of 12
Issued by: TRAFFIC PROGRAM
Date Issued: OCTOBER, 2014