WYOMING STATE HIGHWAY NO. 22
PATHWAY CONNECTOR
Teton County, Wyoming

DRAWING INDEX

Sheet Number	Sheet Title
1.0	TITLE SHEET
OVERVIEWS	
1.1	OVERVIEW
1.2	OVERVIEW
1.3	OVERVIEW
1.4	OVERVIEW
1.5	OVERVIEW
1.6	OVERVIEW
1.7	OVERVIEW
1.8	OVERVIEW
1.9	OVERVIEW
1.10	OVERVIEW
DETAILS	
2.0	TYPICAL SECTIONS
2.1	TYPICAL SECTIONS
2.2	TYPICAL SECTIONS
2.3	DETAILS
2.4	DETAILS
2.5	WEST BRIDGE ABUTMENT
2.6	EAST BRIDGE ABUTMENT
2.7	EMILY STEVEN'S ACCESS
2.8	EMILY STEVEN'S STRIPING DETAIL
2.9	EMILY PAVEMENT SECTIONS AND DETAILS
2.10	WALTON FIELD APPROACH
2.11	WALTON FIELD APPROACH SECTIONS
PLAN & PROFILES	
3.0	FROM STA. 0+00 to 5+20
3.1	FROM STA. 5+00 TO 10+40
3.2	FROM STA. 10+40 TO 15+60
3.3	FROM STA. 15+40 TO 22+20
3.4	FROM STA. 22+20 TO 27+40
3.5	FROM STA. 27+20 TO 32+60
3.6	FROM STA. 34+00.00 - 39+60
3.7	FROM STA. 39+60 - 45+20
3.8	FROM STA. 45+20 TO 49+60
3.9	FROM STA. 49+60 TO 50+09.17
3.10	FROM STA. 50+00 - 55+60
3.11	FROM STA. 55+60 - 61+20
3.12	FROM STA. 61+20 - 66+80
3.13	FROM STA. 66+80 - 72+40
3.14	FROM STA. 72+40 - 78+00
3.15	FROM STA. 78+00 - 83+60
3.16	FROM STA. 83+60 TO 89+20
3.17	FROM STA. 89+20 - 94+80
3.18	FROM STA. 94+80 - 100+40
3.19	FROM STA. 100+40 - 106+00
3.20	FROM STA. 106+00 - 111+60
3.21	FROM STA. 111+60 - 117+20
3.22	FROM STA. 117+20 - 122+80
3.23	FROM STA. 122+80 - 128+40
3.24	FROM STA. 128+40 - 134+00
3.25	FROM STA. 134+00 - 139+60

DRAWING INDEX

Sheet Number	Sheet Title
3.26	FROM STA. 139+60 - 145+20
3.27	FROM STA. 145+20 - 150+80
3.28	FROM STA. 150+80 - 156+40
3.29	BAR Y SPUR FROM STA. 0+00 - 5+40
3.3	FROM STA. 5+40 - 7+28.75
3.31	SKYLINE SPUR FROM STA. 0+00 - 3+59.11
RETAINING WALLS	
4.0	FROM STA. 44+50 TO 45+80
4.1	FROM STA. 45+70 TO 47+10
4.2	FROM STA. 47+0 TO 48+40
4.3	FROM STA. 48+30 TO 49+50
4.4	ISR GABION WALL STA. 138+40 TO 139+60
4.5	ISR GABION WALL STA. 139+60 TO 140+90
4.6	ISR GABION WALL - STA. 140+90 TO 141+25
4.7	UNDERPASS SOLDIER PILE WALL STA. 0+00 TO 1+30
4.8	UNDERPASS SOLDIER PILE WALL
4.9	UNDERPASS SOLDIER PILE WALL
4.10	UNDERPASS SOLDIER PILE WALL
UNDERPASS	
5.0	UNDERPASS GRADING PLAN
5.1	UNDERPASS NORTH END
5.2	UNDERPASS SOUTH END
5.3	END ELEVATIONS
5.4	UNDERPASS SECTIONS
5.5	DRAINAGE SYSTEM
5.6	GUARDRAIL PLAN
UNDERPASS ELECTRICAL PLANS	
E1.0	UNDERPASS LIGHTING PLAN, SCHEDULES AND RISERS
LANDSCAPE PLANS	
6.0	LANDSCAPE PLAN
6.1	LANDSCAPE PLAN
6.2	LANDSCAPE PLAN
JHSC MITIGATION PLAN	
L1.0	PLANTING PLAN
L1.1	IRRIGATION NOTES
WYDOT STANDARD PLANS	
511-1A	WIRE ENCLOSED RIP RAP AND GABIONS (3 PGS)
606-2	MGS GUARDRAIL (18 PGS)
606-3	MGS FABRICATION STANDARD (14 PGS)
606-6	BOX BEAM GUARDRAIL (9 PGS)
606-7	BOX BEAM GUARDRAIL FABRICATION STANDARDS (6 PGS)
607-1A	WIRE FENCE (6 PGS)
703-1E	CONTRCTUCTION TRAFFIC CONTROL DEVICES (12 PGS)
703-2D	CONSTRUCTION TRAFFIC CONTROL TWO LANE (6 PGS)

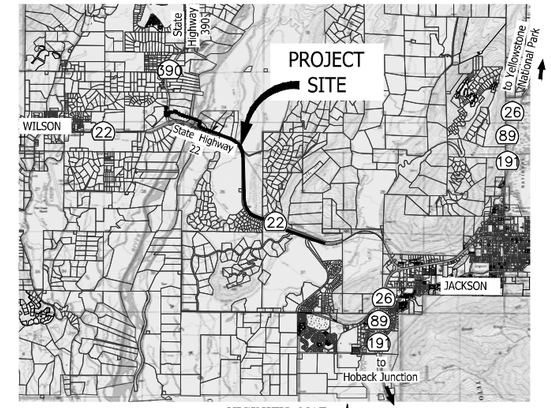

VICINITY MAP
SCALE: N.T.S.

LEGENDS

EXISTING	PROPOSED
PROPERTY LINE	DESIGN CONTOURS
EASEMENT LINE	CENTERLINE OF PATHWAY
EDGE OF ASPHALT	LIMITS OF GRADING
EDGE OF GRAVEL	CONSTRUCTION FENCE
EXISTING CONTOUR	STAGING/STOCKPILE /CONSTRUCTION LIMITS
PRESSURE SEWER	SILT FENCE
SANITARY SEWER	SEDIMENT LOG
SANITARY SEWER SERVICE	CULVERT
OVERHEAD POWER	
3 PHASE OVERHEAD POWER	
BURIED POWER	
CABLE TV	
BURIED TELEPHONE	
BURIED COMMUNICATION LINES	
BURIED FIBER OPTIC	
WATER LINE	
EDGE OF WATER (APPROX.)	
FENCE LINE	
GUARD RAIL	
TREE LINE	
WETLANDS	
BILLBOARD	
LIGHT POLE	
SEWER MANHOLE	
SEWER CLEANOUT	
CULVERT	
POWER POLE	
3'∅ METAL POWER POLE	
CABLE TV POLE	
STRUCTURAL POST	
TELEPHONE PEDESTAL	
POWER TRANSFORMER	
CABLE TV PEDESTAL	
FIBER OPTIC PEDESTAL	
WYDOT VAULT	
IRRIGATION RISER	
SOLAR PANEL	
GUY WIRE	
SIGN	
CONTROL POINT	
BORE HOLE	
RIGHT OF WAY MARKER	

DRAFT

SET No. _____

NELSON ENGINEERING
P.O. BOX 1599, JACKSON WYOMING
(307) 733-2087

DRAWING TITLE
TITLE SHEET

REVISIONS

DRAWING NO 1.0
JOB NO 10-124-03
DATE 1/07/2015

S:\Proj2010\124-07 Path22 Middle Segment\Drawings\Pathway West\Layouts\Title.dwg (Title) - Jan 07 2015 02:09:59 pm PLOTTED BY: karichner

STILSON TO RENDEZVOUS PARK PATHWAY AND MITIGATION – GEC NOTES:

1. DEVELOPMENT SCHEDULE: BEGIN PATHWAY CONSTRUCTION IN FALL 2014 AFTER GEC PERMIT IS ISSUED. ANY REMAINING PATH CONSTRUCTION AND REVEGETATION AND UPLAND MITIGATION WORK WILL BE COMPLETED IN SPRING 2015.
2. PREDOMINANT SOIL TYPE: THE SITE SOISL INLCUDE ALLUVIAL GRAVEL OVERLAIN BY A VARIABLE THICKNESS TOPSOIL COVER.
3. PREDOMINANT VEGETATION: THE EASTERN PATHWAY COORIDOR PASSES THROUGH A PREVIOUSLY DISTURBED AREA THAT HAS BEEN REVEGETATED WITH GRASSES AND WILLOW TREES. AS THE PATH NEARS THE UNDERPASS FROM THE WEST THE VEGETATION CHANGES TO A PREVIOUSLY UNDISTURBED COTTONWOOD FOREST BEFORE ENTERING WYDOT RIGHT OF WAY. VEGETATION AT THE UPLAND MITIGATION AREA IS PRIMARILY MEADOW GRASSES WITH SOME SAGEBRUSH.
4. SITE IS IN FEMA ZONE X

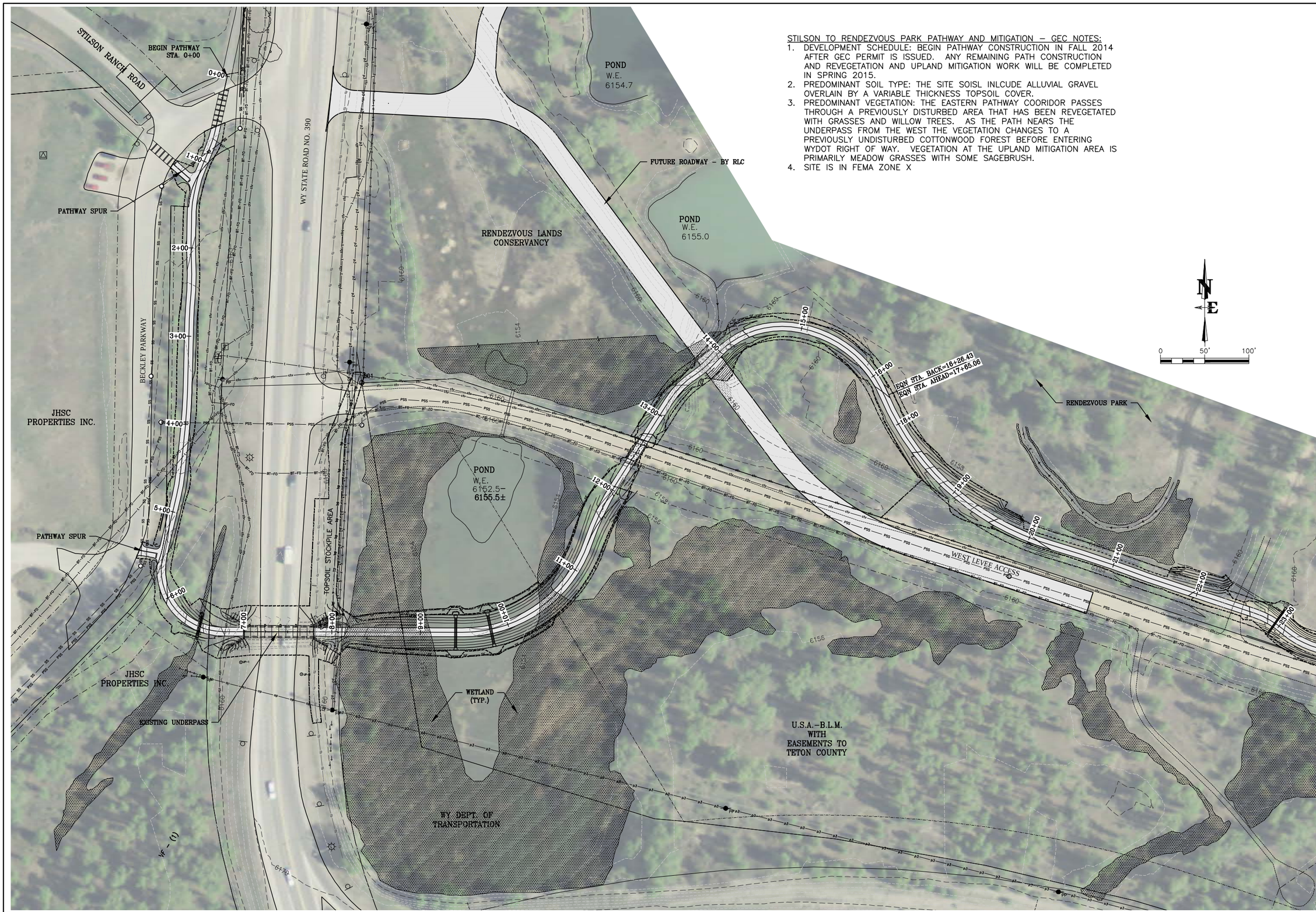

JACKSON HOLE COMMUNITY PATHWAYS
PATH 22

NELSON ENGINEERING
P.O. BOX 1599, JACKSON WYOMING
(307) 733–2087

TETON COUNTY

TOWN OF JACKSON

DRAWING TITLE
OVERVIEW
STA 0+00 TO 23+00

REVISIONS

DRAWING NO
1.1

JOB NO
10–124–03

DATE
1/07/2015

S:\Proj2010\124-07 (Path22 Middle Segment)\Drawings\Pathway West\Layouts\11 Overview.dwg (STA 0+00 TO 23+00) – Jan 07 2015 01:26:26 pm PLOTTED BY: kurchner

PATH 22

NELSON ENGINEERING
P.O. BOX 1599, JACKSON WYOMING
(307) 733-2087

TETON COUNTY

DRAWING TITLE
OVERVIEW
STA 23+00 TO 35+00

REVISIONS

DRAWING NO 1.2
JOB NO 10-124-03
DATE 1/07/2015

S:\Proj2010\124-07 (Path22 Middle Segment)\Drawings\Pathway West\Layouts\11 Overview.dwg (STA 23+00 TO STA 35+00) - Jan 07 2015 01:23:43 pm PLOTTED BY kurtchner

S:\Proj2010\124-07 (Path22 Middle Segment)\Drawings\Pathway West\Layouts\11 Overview.dwg <STA 35+00 TO 50+00> - Jan 07 2015 01:13:12 pm PLOTTED BY: karichner

DRAWING NO	REVISIONS	DRAWING TITLE
1.3		OVERVIEW
JOB NO		STA 35+00 TO 50+00
10-124-03		
DATE		
1/07/2015		

TETON COUNTY WYOMING

NELSON ENGINEERING
P.O. BOX 1599, JACKSON WYOMING
(307) 733-2087

PATH 22 COMMUNITY PATHWAYS JACKSON HOLE

JACKSON HOLE COMMUNITY PATHWAYS
PATH 22

NELSON ENGINEERING
P.O. BOX 1599, JACKSON WYOMING
(307) 733-2087

TETON COUNTY WYOMING

TOWN OF JACKSON WYOMING

DRAWING TITLE
OVERVIEW
STA 50+00 TO 66+00

REVISIONS

DRAWING NO 1.4
JOB NO 10-124-03
DATE 1/07/2015

S:\Proj\2010\124-07 Phase2 Middle Segment\Drawings\Pathway West\Layouts\11 Overviewdwg STA 50+00 TO 66+00 - Jan 07 2015 09:34:40 pm PLOTTED BY kwichner

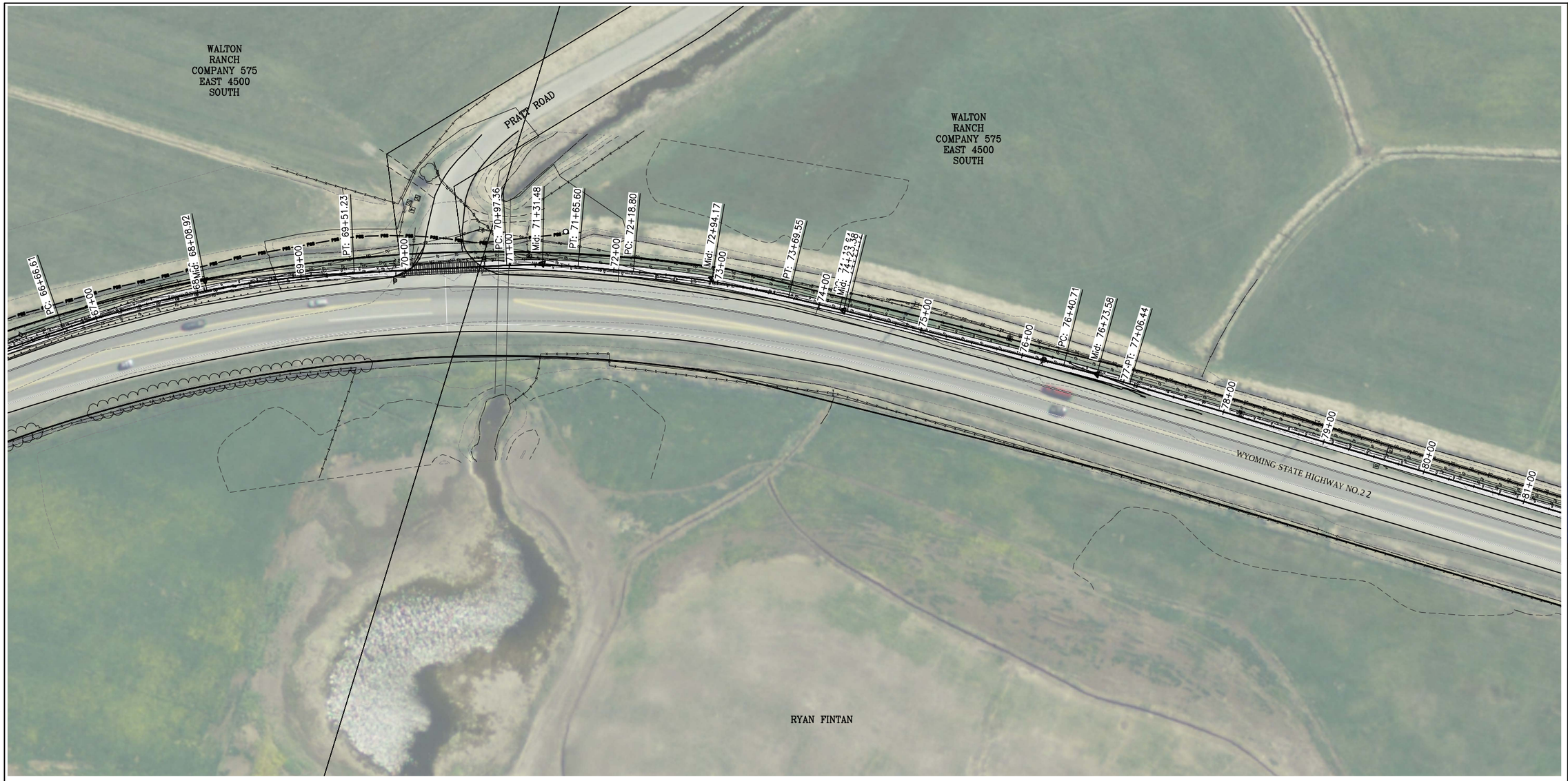

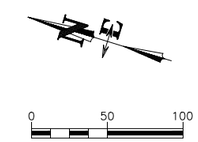

JACKSON HOLE COMMUNITY PATHWAYS

PATH 22

NELSON ENGINEERING
P.O. BOX 1599, JACKSON WYOMING
(307) 733-2087

TETON COUNTY

TOWN OF JACKSON WYOMING

DRAWING TITLE
OVERVIEW
STA 66+00 TO 81+00

REVISIONS

DRAWING NO
1.5

JOB NO
10-124-03

DATE
1/07/2015

S:\Proj2010\124-07 (Path22 Middle Segment)\Drawings\Pathway West\Layouts\11 Overview.dwg (STA 66+00 TO 81+00) - Jan 07 2015 01:14:01 pm PLOTTED BY: karichner

PATH 22

NELSON ENGINEERING
P.O. BOX 1599, JACKSON WYOMING
(307) 733-2087

TETON COUNTY

DRAWING TITLE
OVERVIEW
STA 81+00 TO 96+00

REVISIONS

DRAWING NO 1.6
JOB NO 10-124-03
DATE 1/07/2015

S:\Proj\2010\124-07 Phase2 Middle Segment\Drawings\Pathway West\Layouts\11 Overview.dwg STA 81+00 TO 96+00 - Jan 07 2015 01:42:21 pm PLOTTED BY kerichner

JACKSON HOLE COMMUNITY PATHWAYS

PATH 22

NELSON ENGINEERING
P.O. BOX 1599, JACKSON WYOMING
(307) 733-2087

TETON COUNTY WYOMING

TOWN OF JACKSON WYOMING

DRAWING TITLE
OVERVIEW
STA 96+00 TO 111+00

REVISIONS

DRAWING NO 1.7
JOB NO 10-124-03
DATE 1/07/2015

S:\Proj\2010\124-07 Phase2 Middle Segment\Drawings\Pathway West\Layouts\11 Overview.dwg STA 96+00 TO 111+00 - Jan 07 2015 01:44:40 pm PLOTTED BY karichner

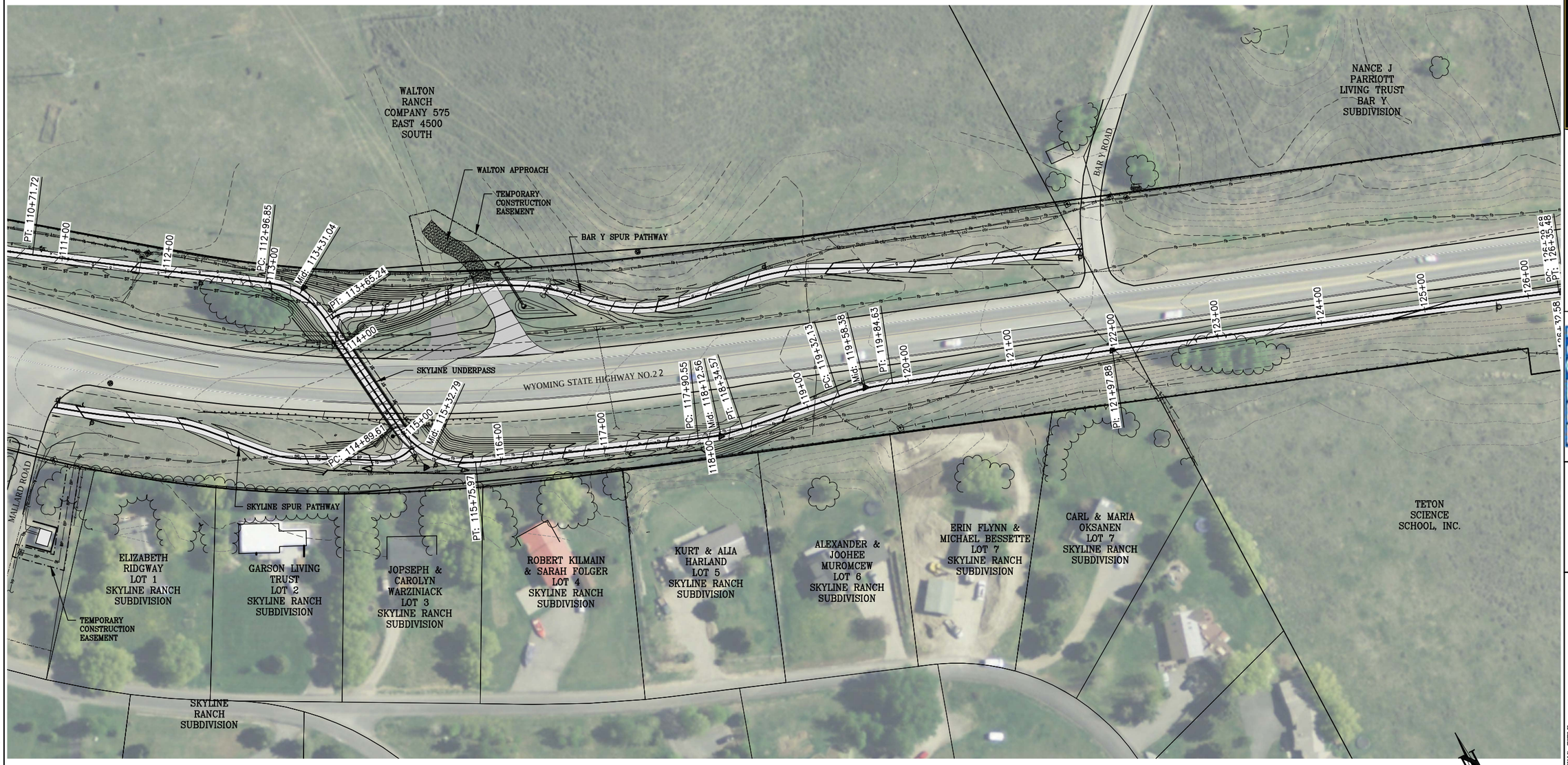

S:\Proj2010\124-07 (Path22 Middle Segment)\Drawings\Pathway West\Layouts\11 Overview.dwg STA 111+00 TO 126+00 - Jan 07 2015 01:54:41 pm PLOTTED BY kurichner

PATH 22

NELSON ENGINEERING
P.O. BOX 1599, JACKSON WYOMING
(307) 733-2087

TETON COUNTY

DRAWING TITLE
OVERVIEW
STA 111+00 TO 126+00

REVISIONS

DRAWING NO 1.8
JOB NO 10-124-03
DATE 1/07/2015

S:\Proj2010\124-07 (Path22 Middle Segment)\Drawings\Pathway West\Layouts\11 Overview.dwg <STA 126+00 TO 141+00> - Jan 07 2015 0:15:20 pm PLOTTED BY: karichner

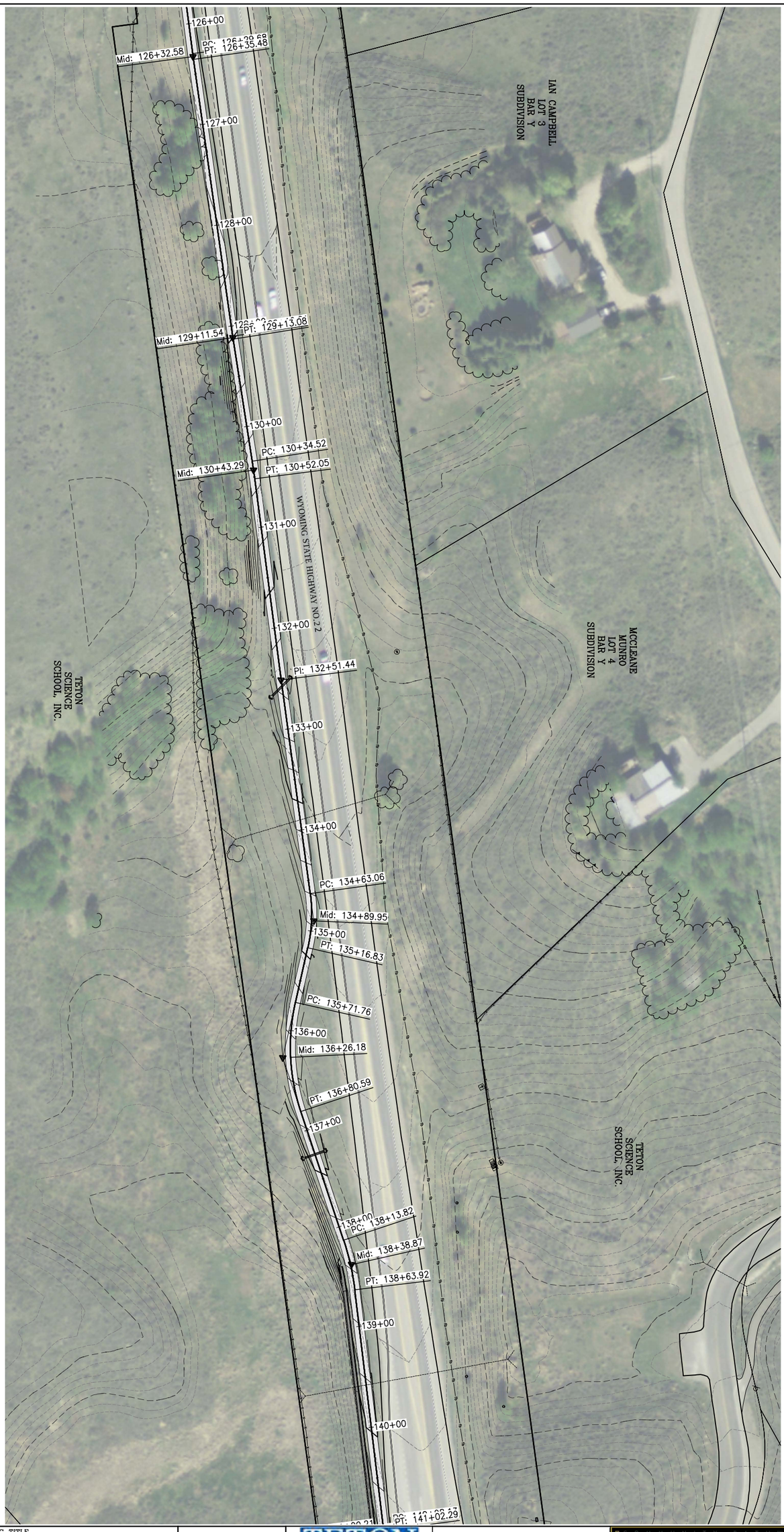

0 50 100

DRAWING NO	REVISIONS	DRAWING TITLE
1.9		OVERVIEW
JOB NO		STA 126+00 TO 141+00
10-124-03		
DATE		
1/07/2015		

TETON COUNTY WYOMING

NELSON ENGINEERING
P.O. BOX 1599, JACKSON WYOMING
(307) 733-2087

PATH 22

JACKSON HOLE COMMUNITY PATHWAYS
PATH 22

NELSON ENGINEERING
P.O. BOX 1599, JACKSON WYOMING
(307) 733-2087

TETON COUNTY

TOWN OF JACKSON

DRAWING NO	REVISIONS	DRAWING TITLE
1.10		OVERVIEW
JOB NO 10-124-03		STA 141+00 TO 155+85
DATE 1/07/2015		

S:\Proj\2010\124-07 (Path22 Middle Segment)\Drawings\Pathway West\Layouts\11 Overview.dwg (STA 141+00 TO 155+85) - Jan 07 2015 01:54:40 pm PLOTTED BY: kurschner

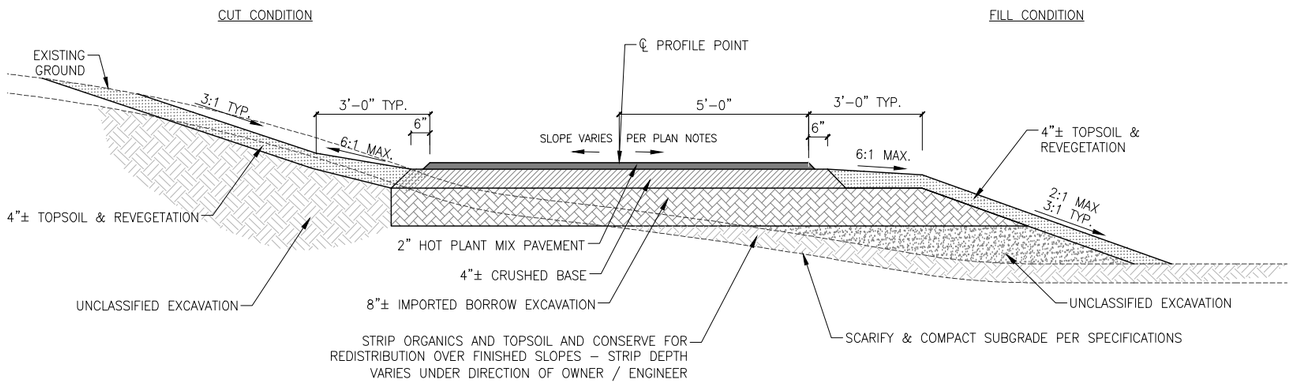

1 / 2.0 PATHWAY TYPICAL SECTION

1/4" = 1'-0"

NOTE: SECTION DEPICTS TYPICAL PATHWAY SURFACING AND CUT & FILL CONDITIONS. HOWEVER, REFER TO PLAN & PROFILES & OTHER TYPICAL SECTIONS PERTINENT TO SPECIFIC LOCATIONS.

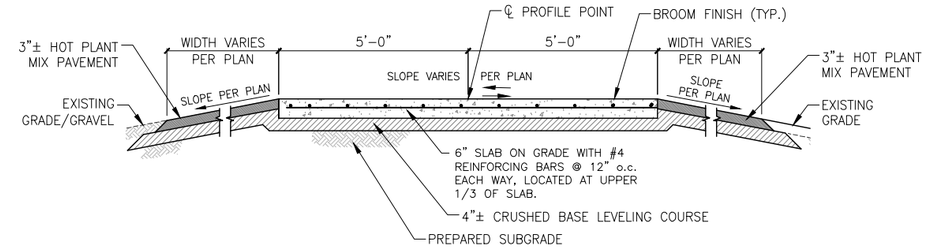

4 / 2.0 TYPICAL SECTION: CONCRETE PATH/ASPHALT

1/4" = 1'-0"

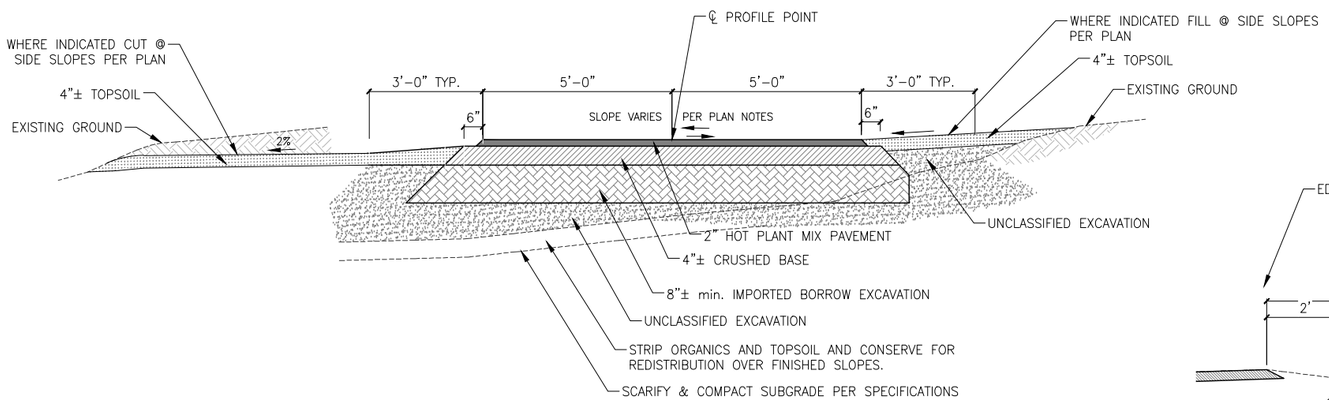

2 / 2.0 TYPICAL SECTION: FLAT SIDE SLOPES CUT/FILL CONDITION

1/4" = 1'-0"

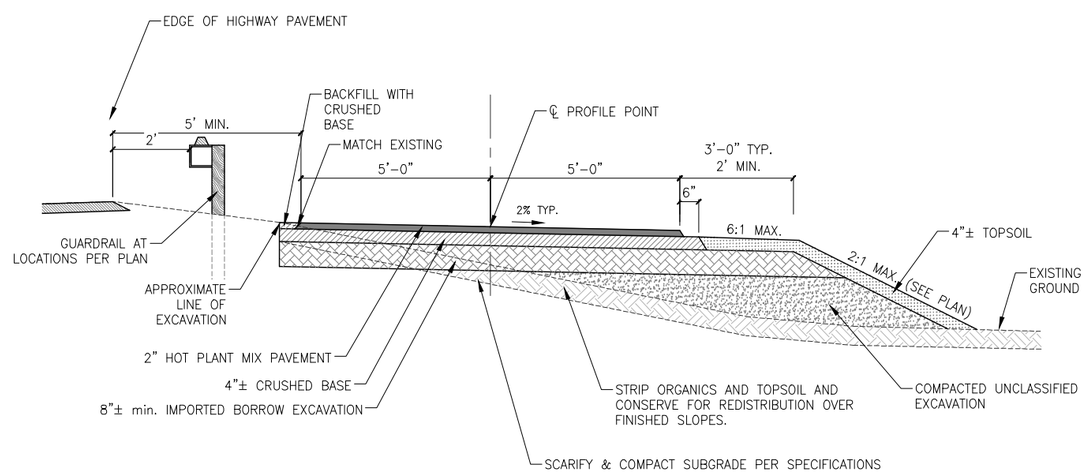

6 / 2.0 TYPICAL SECTION - ALONG HIGHWAY

1/4" = 1'-0"

NELSON ENGINEERING
P.O. BOX 1599, JACKSON WYOMING
(307) 733-2087

DRAWING TITLE
TYPICAL SECTIONS

REVISIONS

DRAWING NO 2.0
JOB NO 10-124-03
DATE 1/07/2015

S:\Proj2010\124-07 Pathway Middle Segment\Drawings\Pathway West\Layouts\2.0 Typical Sections.dwg (2.0) - Jan 07 2015 01:54:47 pm PLOTTED BY karlcher

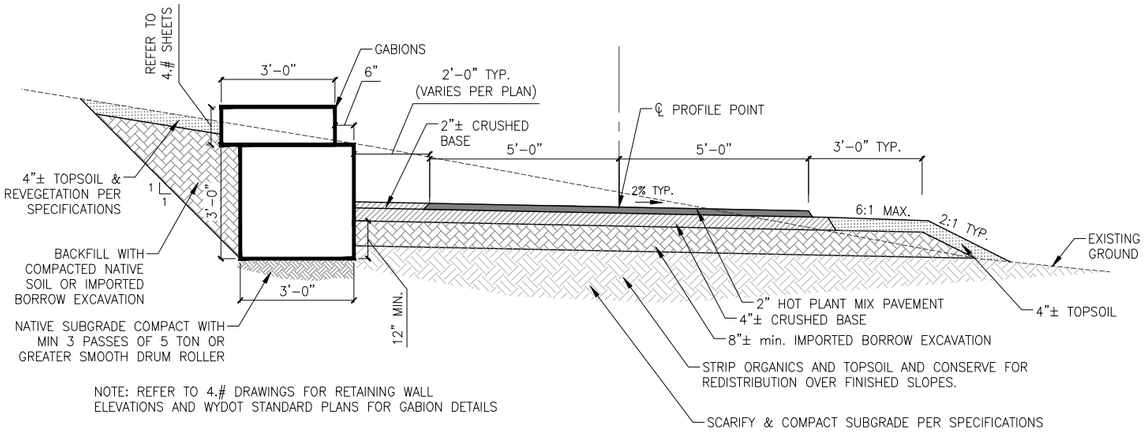

1/2.1 TYPICAL SECTION: IRON ROCK WALL FROM STA. 44+50Ñ TO 44+77Ñ

1/4" = 1'-0"

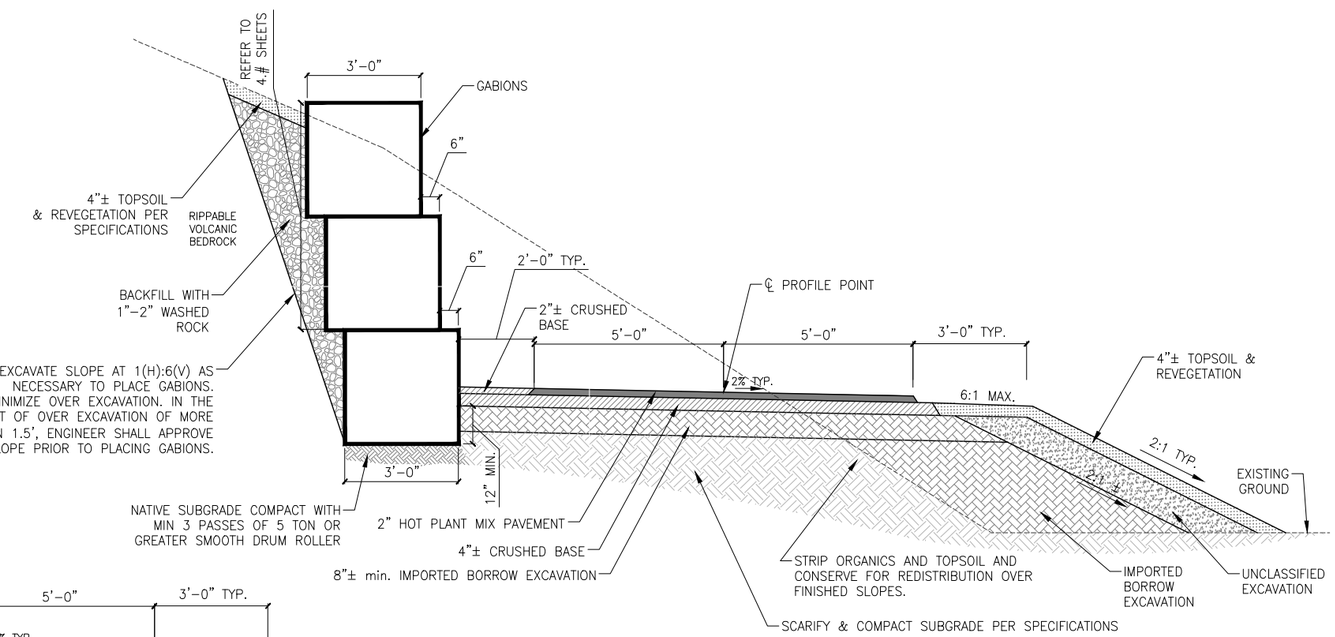

3/2.1 TYPICAL SECTION: IRON ROCK WALL FROM STA. 46+21Ñ TO 49+50Ñ

1/4" = 1'-0"

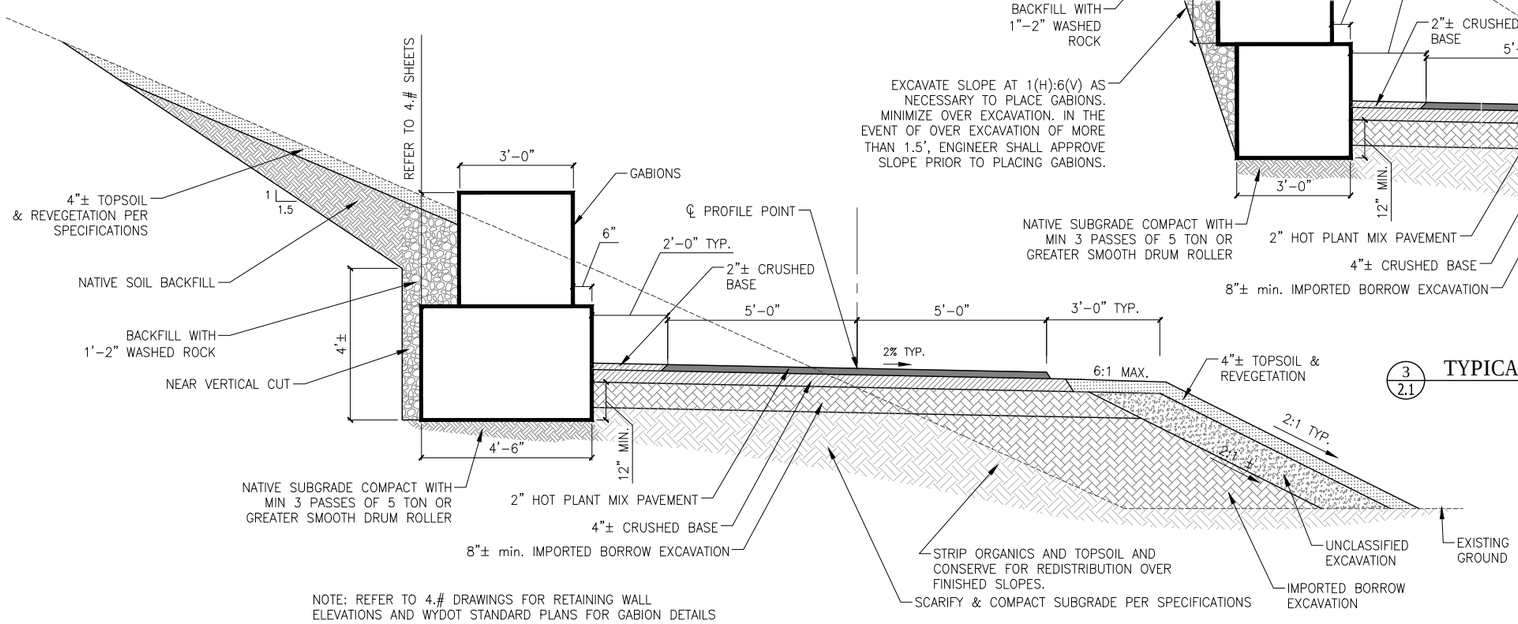

2/2.1 TYPICAL SECTION: IRON ROCK WALL FROM STA. 44+77Ñ TO 46+21Ñ

1/4" = 1'-0"

JACKSON HOLE COMMUNITY PATHWAYS — PATH 22

NELSON ENGINEERING
P.O. BOX 1599, JACKSON WYOMING
(307) 733-2087

TETON COUNTY

TOWN OF JACKSON

DRAWING TITLE
TYPICAL SECTIONS

REVISIONS

DRAWING NO 2.1
JOB NO 10-124-03
DATE 1/07/2015

S:\Proj\2010\124-07 (Path22 Middle Segment)\Drawings\Pathway West\Layouts\28 Typical Sections.dwg (23) - Jan 07 2015 01:55:54 pm PLOTTED BY kerichner

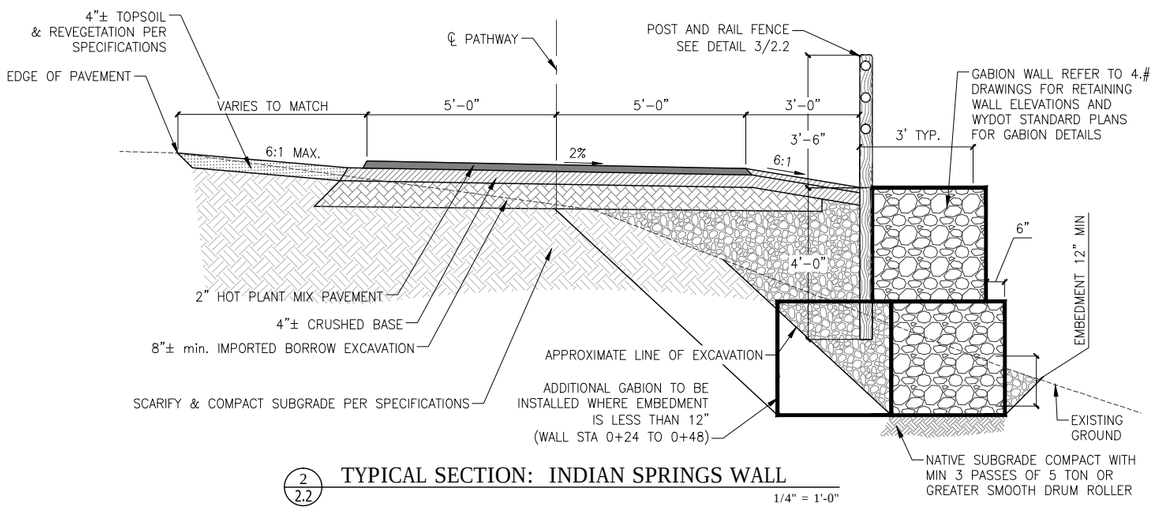

2/2.2 TYPICAL SECTION: INDIAN SPRINGS WALL

1/4" = 1'-0"

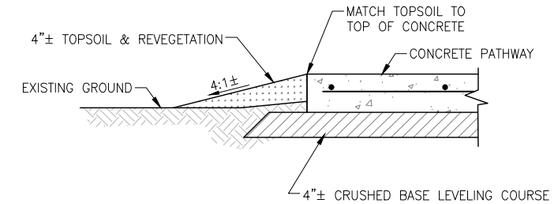

5/2.0 TYPICAL SECTION: CONCRETE PATH/LANDSCAPE

1/2" = 1'-0"

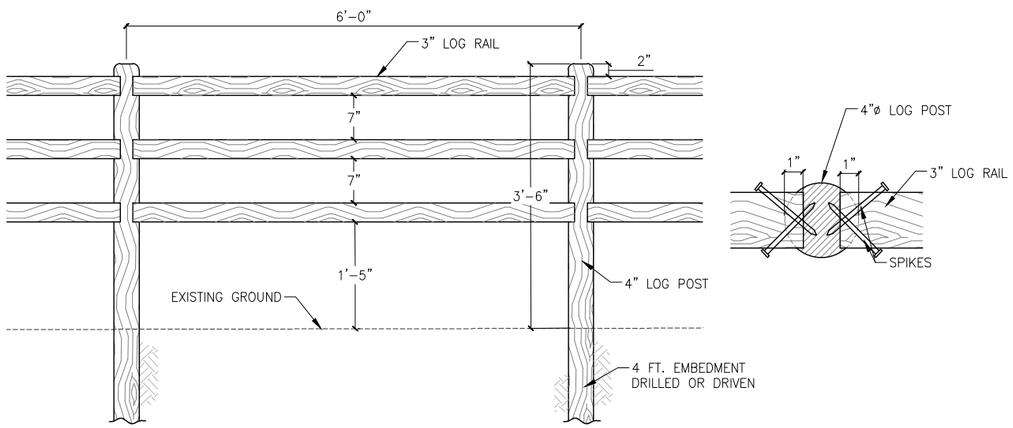

3/2.2 FENCING DETAIL

N.T.S.

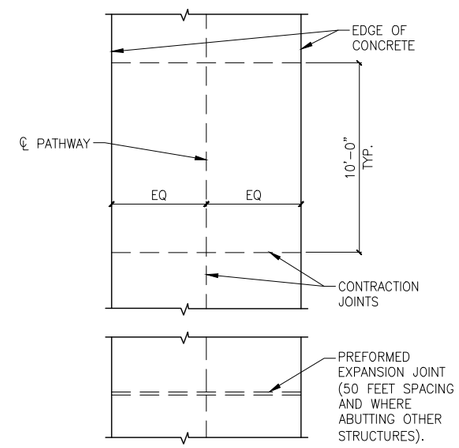

A/2.0 TYPICAL JOINT SPACING FOR CONCRETE PATHWAY

1/8" = 1'-0"

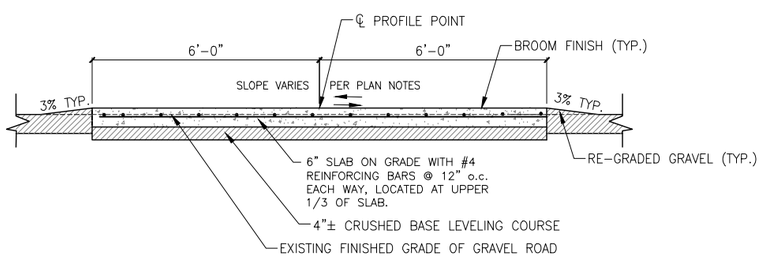

MISCELLANEOUS CONCRETE FLATWORK TO BE OF SAME CONSTRUCTION AS SHOWN BUT WITH DIMENSIONS PER PLAN

3/2.0 SECTION: GRAVEL ROAD CROSSING / CONCRETE FLATWORK

1/4" = 1'-0"

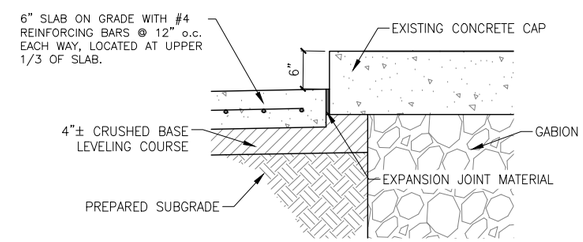

7/2.0 TYPICAL SECTION - CONCRETE SLABS AT GABION WINGWALL

1/8" = 1'-0"

NELSON ENGINEERING
P.O. BOX 1599, JACKSON WYOMING
(307) 733-2087

DRAWING TITLE
TYPICAL SECTIONS

REVISIONS

DRAWING NO 2.2

JOB NO 10-124-03

DATE 1/07/2015

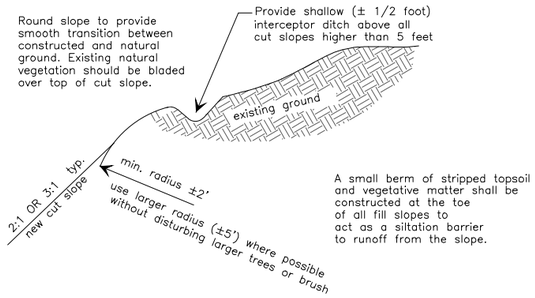

1/2.3 SLOPE ROUNDING DETAIL

N.T.S.

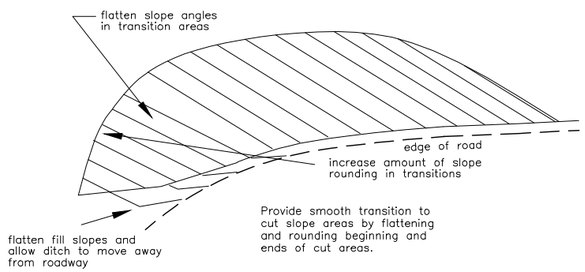

2/2.3 SLOPE TRANSITION DETAIL

N.T.S.

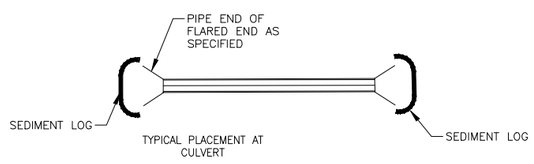

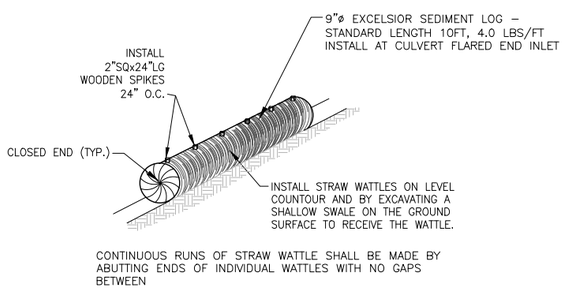

4/2.3 SEDIMENT LOG DETAIL

N.T.S.

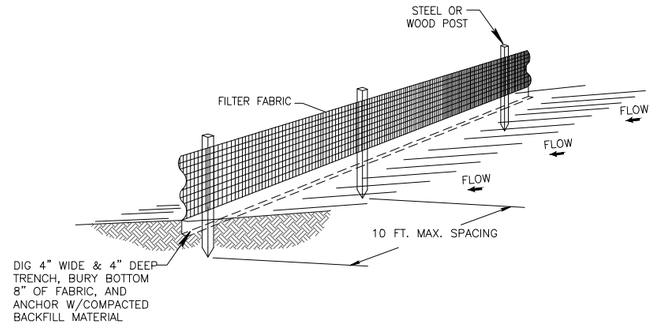

NOTES:

1. THE HEIGHT OF A SILT FENCE SHALL NOT EXCEED 36 INCHES.
2. THE FILTER FABRIC SHALL BE PURCHASED IN A CONTINUOUS ROLL CUT TO THE LENGTH OF THE BARRIER TO AVOID THE USE OF JOINTS.
3. POSTS SHALL BE SPACED A MAXIMUM OF 10 FEET APART AT THE BARRIER LOCATION AND DRIVEN SECURELY INTO THE GROUND A MINIMUM OF 12 INCHES.
4. A TRENCH SHALL BE EXCAVATED APPROXIMATELY 4 INCHES WIDE AND 4 INCHES DEEP ALONG THE LINE OF POSTS AND UPSLOPE FROM THE BARRIER.
5. THE FILTER FABRIC SHALL BE STAPLED OR WIRED TO THE FENCE, AND 8 INCHES OF THE FABRIC SHALL BE EXTENDED INTO THE TRENCH. THE FABRIC SHALL NOT EXTEND MORE THAN 36 INCHES (90 CM) ABOVE THE ORIGIONAL GROUND SURFACE.
6. THE TRENCH SHALL BE BACKFILLED AND THE SOIL COMPACTED OVER THE FILTER FABRIC.
7. FABRIC AND INSTALLATION TECHNIQUES TO BE APPROVED BY ENGINEER.

4/2.3 SILT FENCE INSTALLATION DETAIL

N.T.S.

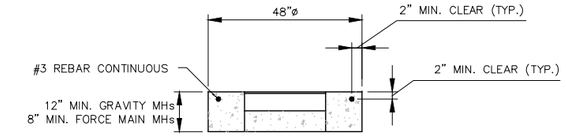

COVER AND COLLAR SECTION

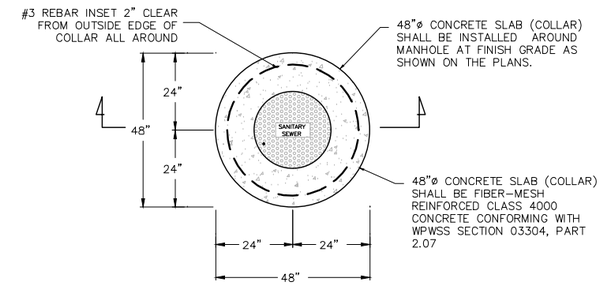

COVER AND COLLAR PLAN

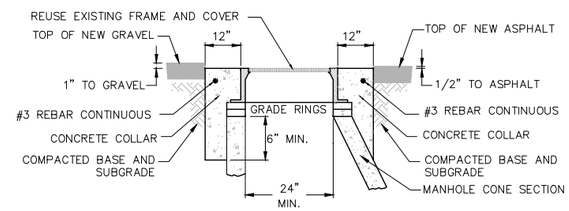

ADJUSTMENT DETAIL

NOTES:

1. PLACE 4" MIN. TO 12" MAX. ADJUSTING RINGS UNDER FRAME. SLOPE MANHOLE RING AS REQUIRED TO MATCH STREET GRADE AND CROSS SLOPE. MAKE FINAL MANHOLE ADJUSTMENT AFTER PAVING AND BEFORE SEAL COATING.
2. PLACE CONCRETE COLLAR AROUND ALL MH FRAMES.
3. A. MH COVERS IN PASTURES AND LAWNS SHALL BE FLUSH WITH FINISHED EARTH SURFACE.
   B. MH COVERS IN ASPHALT SHALL BE 1/2" BELOW FINISHED ASPHALT SURFACE.
   C. MH COVERS IN GRAVEL ROADS SHALL BE 1" BELOW FINISHED GRAVEL SURFACE.

MANHOLE COVER CONCRETE COLLAR DETAIL

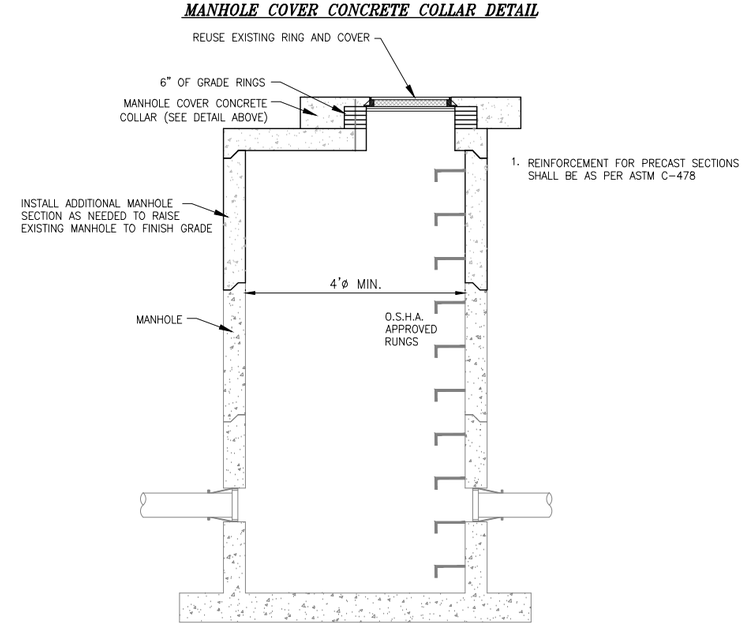

5/2.3 MANHOLE ADJUSTMENT DETAIL

N.T.S.

NELSON ENGINEERING
P.O. BOX 1599, JACKSON WYOMING
(307) 733-2087

DRAWING TITLE: DETAILS

REVISIONS

DRAWING NO: 2.3

JOB NO: 10-124-03

DATE: 1/07/2015

S:\Proj2010\124-07 (Path22 Middle Segment)\Drawings\Pathway West\Layouts\22 DETAILS.dwg (2.2) - Jan 07 2015 01:16:07 pm PLOTTED BY: Kurt Scheer

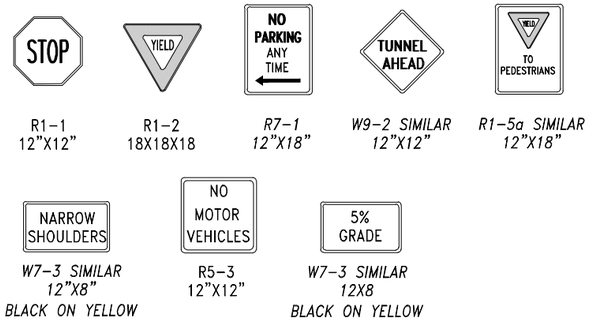

1/2.4 SIGNS

N.T.S.

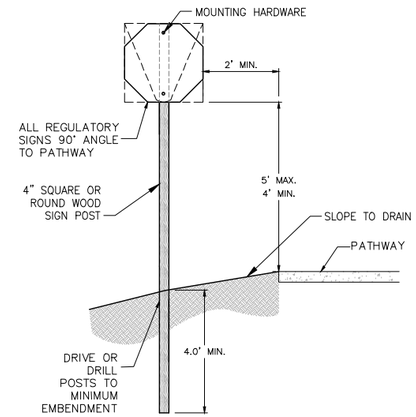

3/2.4 SIGN DETAIL

N.T.S.

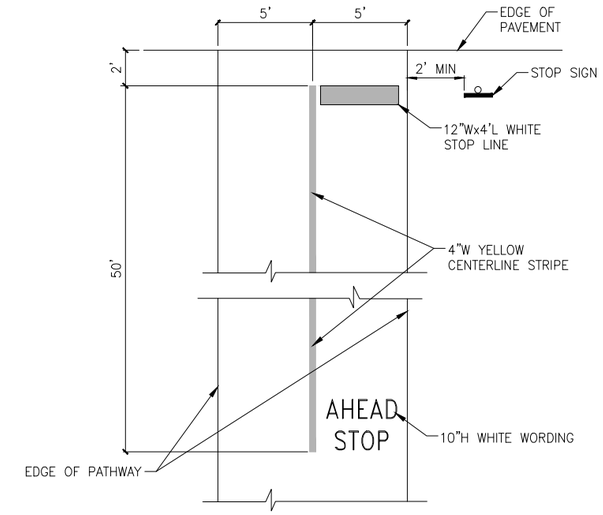

5/2.4 STOP LINE STRIPING DETAIL

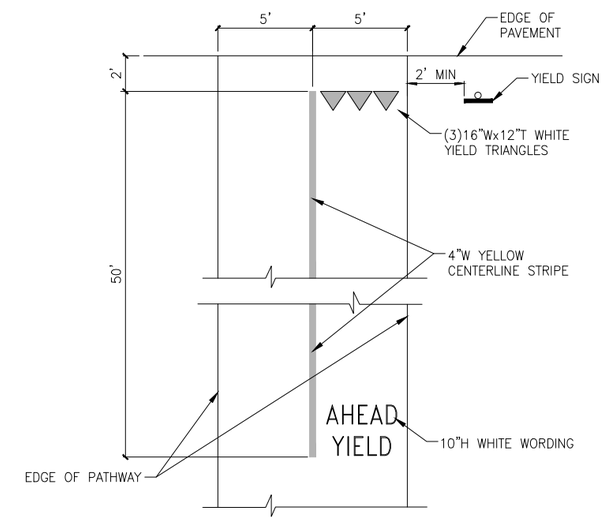

6/2.4 YIELD LINE STRIPING DETAIL

STATION	SIDE	SIGN	OFFSET FROM EOP	REMARKS
0+60±	LT	YIELD	2.75	
1+30±	RT	YIELD	2.75	FACING WEST
5+58±	RT	YIELD	2.75	FACING WEST
5+58±	RT	NO MOTOR VEHICLES	20	FACING WEST
6+25±	RT	TUNNEL AHEAD	2.75	
8+50±	LT	TUNNEL AHEAD	2.75	
12+38±	RT	STOP & NO MOTOR VEHICLES	2.75	OPPOSE SIGNS ON SAME POST
12+65±	LT	STOP & NO MOTOR VEHICLES	2.75	OPPOSE SIGNS ON SAME POST
13+40±	RT	5% GRADE	2.75	
15+00±	LT	5% GRADE	2.75	
17+75±	RT	5% GRADE	2.75	
18+40±	RT	NARROW SHOULDERS	2.75	
20+00±	LT	5% GRADE	2.75	
20+45±	LT	NARROW SHOULDERS	2.75	
22+35±	RT	5% GRADE	2.75	
26+05±	LT	YIELD TO PEDESTRIANS	2.75	
26+60±	RT	5% GRADE	2.75	
26+60±	LT	NO PARKING ANYTIME	10.0	FACING SOUTH
33+70±	RT	5% GRADE	2.75	
36+00±	LT	YIELD TO PEDESTRIANS	2.75	
36+10±	LT	5% GRADE	2.75	
38+65±	RT	5% GRADE	2.75	
41+50±	LT	5% GRADE	2.75	
42+56±	RT	STOP & NO MOTOR VEHICLES	2.75	OPPOSE SIGNS ON SAME POST
43+00±	LT	STOP & NO MOTOR VEHICLES	2.75	OPPOSE SIGNS ON SAME POST
43+70±	RT	5% GRADE	2.75	BEHIND STA EQN
45+10±	LT	5% GRADE	2.75	AHEAD OF STA EQN
49+90±	LT	NARROW SHOULDERS	2.75	
50+06±	RT	YIELD & NO MOTOR VEHICLES	2.75	OPPOSE SIGNS ON SAME POST
50+49±	LT	YIELD & NO MOTOR VEHICLES	2.75	OPPOSE SIGNS ON SAME POST
61+70±	RT	YIELD & NO MOTOR VEHICLES	2.75	OPPOSE SIGNS ON SAME POST
62+23±	LT	YIELD & NO MOTOR VEHICLES	2.75	OPPOSE SIGNS ON SAME POST
69+91±	RT	YIELD & NO MOTOR VEHICLES	2.75	OPPOSE SIGNS ON SAME POST
70+76±	LT	YIELD & NO MOTOR VEHICLES	2.75	OPPOSE SIGNS ON SAME POST
112+35±	RT	5% GRADE & TUNNEL AHEAD	2.75	
115+40±	RT	5% GRADE	2.75	
119+55±	LT	5% GRADE & TUNNEL AHEAD	2.75	
0+03± BAR Y SPUR	LT	STOP & NO MOTOR VEHICLES	2.75	OPPOSE SIGNS ON SAME POST
3+30± BAR Y SPUR	RT	5% GRADE & TUNNEL AHEAD	2.75	
7+26± BAR Y SPUR	RT	STOP	2.75	
0+03± SKYLINE EAST SPUR	LT	STOP & NO MOTOR VEHICLES	2.75	OPPOSE SIGNS ON SAME POST
0+40± SKYLINE EAST SPUR	RT	5% GRADE & TUNNEL AHEAD	2.75	
3+56± SKYLINE EAST SPUR	RT	STOP	2.75	
141+73±	RT	YIELD & NO MOTOR VEHICLES	2.75	OPPOSE SIGNS ON SAME POST
142+55±	LT	YIELD & NO MOTOR VEHICLES	2.75	OPPOSE SIGNS ON SAME POST
148+40±	RT	5% GRADE	2.75	
149+85±	LT	5% GRADE	2.75	
150+15±	RT	5% GRADE	2.75	
154+85	LT	5% GRADE	2.75	
155+83±	RT	YIELD	2.75	

2/2.4 PATHWAY SIGN SCHEDULE

START STATION	END STATION	DESCRIPTION	COLOR	REMARKS
0+20	0+60	CROSSWALK	WHITE	2'W x 10'L @ 5'-O.C.
SPUR @	1+25±	CROSSWALK	WHITE	2'W x 10'L @ 5'-O.C. AT CROSSING OF BECKLEY PARK WAY
5+58±	9+00±	4" CL STRIPE	YELLOW	
12+00±	15+00±	4" CL STRIPE	YELLOW	
24+50±	26+70±	4" CL STRIPE	YELLOW	
34+00±	39+00±	4" CL STRIPE	YELLOW	
42+63±	42+98±	CROSSWALK	WHITE	2'W x 10'l @5' O.C.
43+00±	45+44±	4" CL STRIPE	YELLOW	BEHIND STA EQN
44+32±	44+40±	4" CL STRIPE	YELLOW	AHEAD OF STA EQN
50+09±	50+41±	CROSSWALK	WHITE	2'W x 10'L @5' O.C.
61+79±	62+19±	CROSSWALK	WHITE	2'W x 10'L @5' O.C.
70+04±	70+69±	CROSSWALK	WHITE	2'W x 10'L @5' O.C.
112+55±	118+50±	4"CL STRIPE	YELLOW	
150+50	155+83	4"CL STRIPE	YELLOW	
STATION	SIDE	DESCRIPTION		
12+38±	RT	STOP LINE	SEE DETAIL	
12+62+	LT	STOP LINE	SEE DETAIL	
42+61±	RT	STOP LINE	SEE DETAIL	
43+00±	LT	STOP LINE	SEE DETAIL	
50+06±	RT	YIELD LINE	SEE DETAIL	
50+49±	LT	YIELD LINE	SEE DETAIL	
61+77±	RT	YIELD LINE	SEE DETAIL	
62+23±	LT	YIELD LINE	SEE DETAIL	
69+91±	RT	YIELD LINE	SEE DETAIL	
70+76±	LT	YIELD LINE	SEE DETAIL	
0+03± BAR Y SPUR	RT	STOP LINE	SEE DETAIL	
7+26± BAR Y SPUR	LT	STOP LINE	SEE DETAIL	
0+03± SKYLINE EAST SPUR	LT	STOP LINE	SEE DETAIL	
3+56± SKYLINE EAST SPUR	RT	STOP LINE	SEE DETAIL	
141+73	RT	YIELD LINE	SEE DETAIL	
142+50	LT	YIELD LINE	SEE DETAIL	
155+83	RT	YIELD LINE	SEE DETAIL	

4/2.4 STRIPING SCHEDULE

STATION	SIGN	REMARKS
42+61±	JCT 390	REMOVE AND REPLACE, SEE SHEET 2.7 FOR LOCATION
43+82±	EMILY STEVEN'S PARK BILLBOARD	REMOVE AND REPLACE, SEE SHEET 2.7 FOR LOCATION
44+76±	RIGHT LANE MUST TURN RIGHT	NEW SIGN, SEE SHEET 2.7 FOR LOCATION
56+63±	SPEED LIMIT	REMOVE AND REPLACE 2' NORTH OF ORIGINAL LOCATION
59+23±	CONSERVATION TRUST	REMOVE AND RESET
62+33±	WALTON RANCH ROAD	REMOVE AND RESET
74+00±	MILE MARKER "3"	REMOVE AND REPLACE 3' WEST OF ORIGINAL LOCATION
76+20±	TETON VILLAGE PARKING INFO	REMOVE AND REPLACE AT STA 103+00
81+94±	ICY ROAD	REMOVE AND REPLACE 10' WEST OF ORIGINAL LOCATION
92+08±	ROAD TEST	REMOVE AND RESET
125+71±	LITTER CONTROL	REMOVE AND REPLACE 3' SOUTH OF ORIGINAL LOCATION

7/2.4 ROAD SIGN SCHEDULE

JACKSON HOLE COMMUNITY PATHWAYS
PATH 22

NELSON ENGINEERING
P.O. BOX 1599, JACKSON WYOMING
(307) 733-2087

TETON COUNTY

DRAWING TITLE
DETAILS

REVISIONS

DRAWING NO 2.4
JOB NO 10-124-03
DATE 1/07/2015

S:\Proj2010\124-07 (Path22 Middle Segment)\Drawings\Pathway West\Layouts\22 DETAILS.dwg (2.3) -- Jan 07 2015 01:16:13 pm PLOTTED BY: karlchner

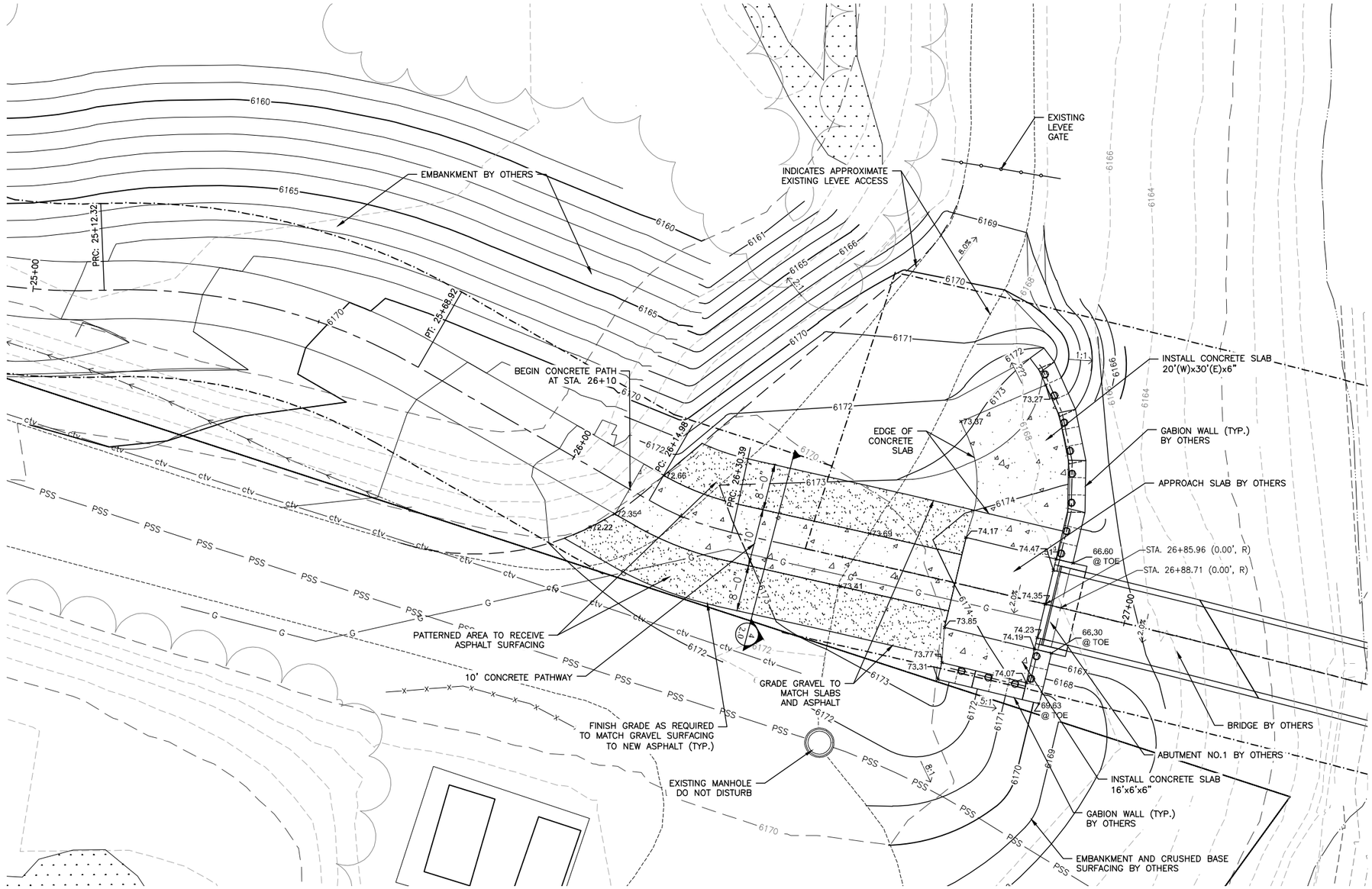

JACKSON HOLE COMMUNITY PATHWAYS
PATH 22

NELSON ENGINEERING
P.O. BOX 1599, JACKSON WYOMING
(307) 733-2087

TETON COUNTY

TOWN OF JACKSON WYOMING

DRAWING TITLE
WEST BRIDGE ABUTMENT
SITE LAYOUT PLAN

REVISIONS

DRAWING NO 2.5
JOB NO 10-124-03
DATE 1/07/2015

S:\Proj2010\124-07 (Path22 Middle Segment)\Drawings\Pathway West\Layouts\24 West Bridge Abutment.dwg (2.5) - Jan 07 2015 01:54:41 pm PLOTTED BY: kurichner

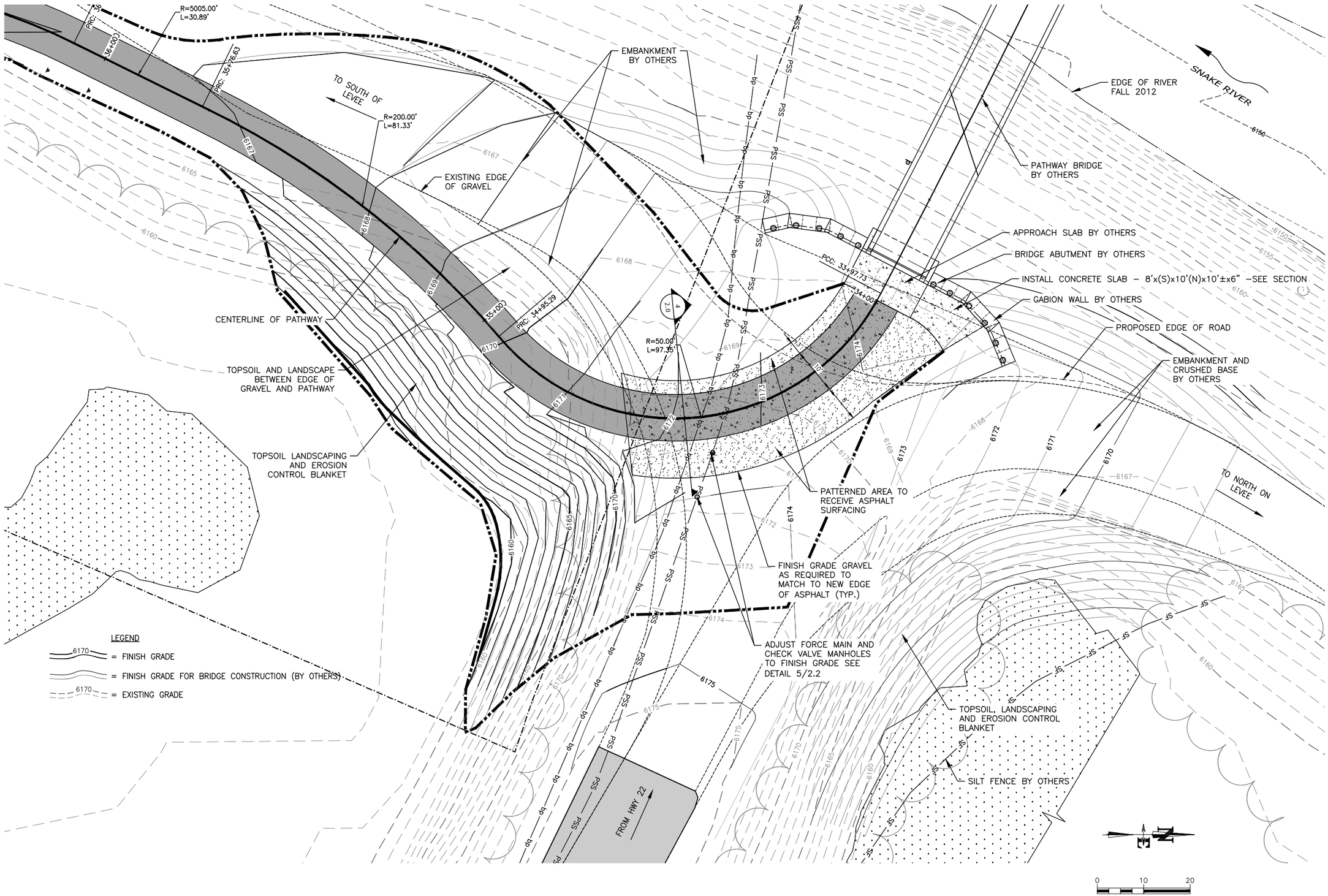

PATH 22

NELSON ENGINEERING
P.O. BOX 1599, JACKSON WYOMING
(307) 733-2087

TETON COUNTY

DRAWING TITLE
EAST BRIDGE ABUTMENT
SITE PLAN

REVISIONS

DRAWING NO 2.6
JOB NO 10-124-03
DATE 1/07/2015

S:\Proj2010\124-07 (Path22 Middle Segment)\Drawings\Pathway West\Layouts\25 East Bridge Abutment.dwg <25 EAST ABUTMENT> - Jan 07 2015 08:17:55 pm PLOTTED BY kurichner

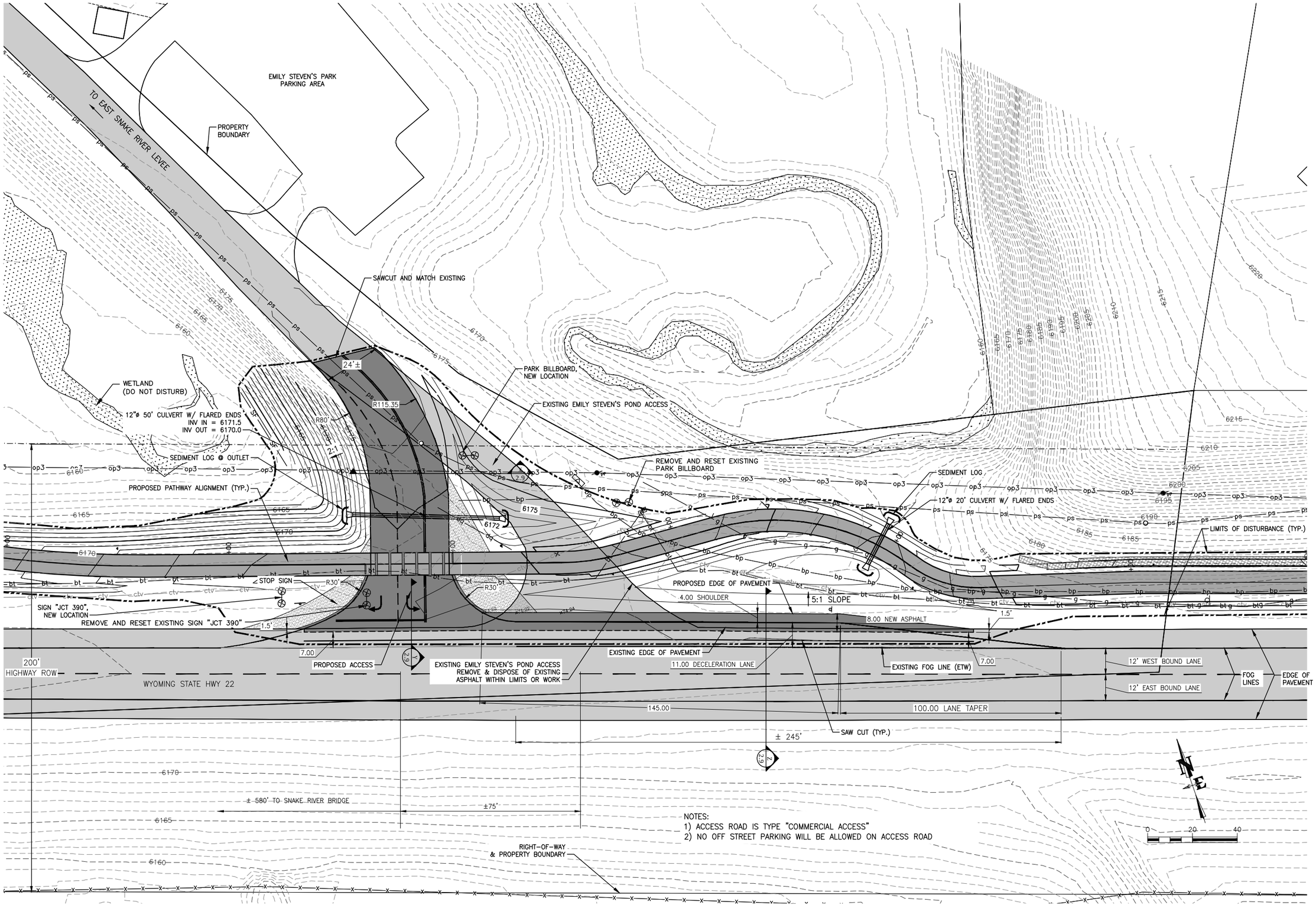

NOTES:
1) ACCESS ROAD IS TYPE "COMMERCIAL ACCESS"
2) NO OFF STREET PARKING WILL BE ALLOWED ON ACCESS ROAD

JACKSON HOLE COMMUNITY PATHWAYS
PATH 22

NELSON ENGINEERING
P.O. BOX 1599, JACKSON WYOMING
(307) 733-2087

TETON COUNTY WYOMING

TOWN OF JACKSON WYOMING

DRAWING TITLE
EMILY STEVEN'S ACCESS
PLAN LAYOUT

REVISIONS

DRAWING NO 2.7
JOB NO 10-124-03
DATE 1/07/2015

S:\Proj2000\124-06 (Path 22 West - Pathway Planning East of River)\To WYDOT\C1-PLAN-PROF-CL PATHWAY.DWG (EMILY'S ACCESS) - Jan 07 2015 01:19:08 pm PLOTTED BY: karichner

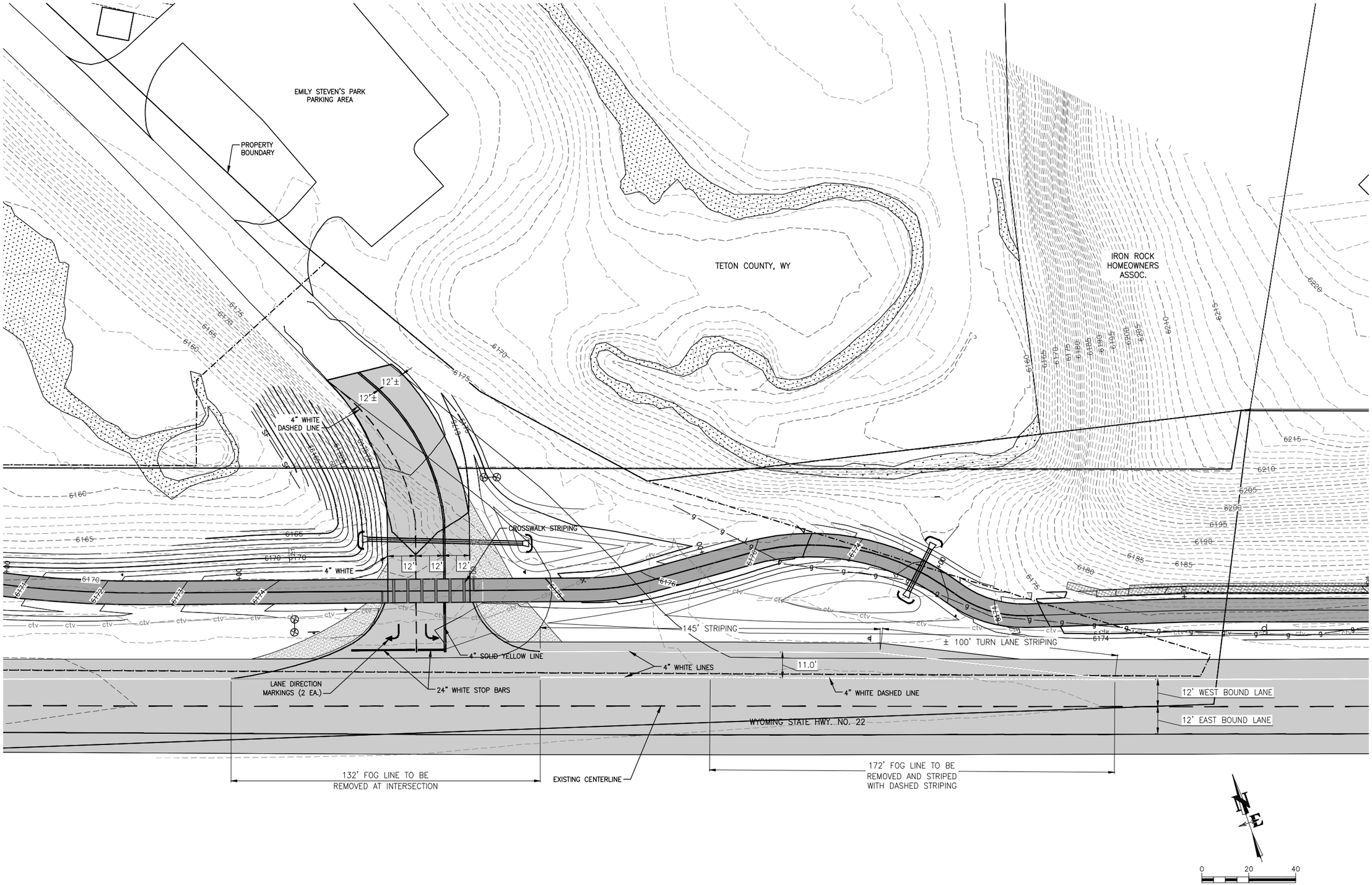

JACKSON HOLE COMMUNITY PATHWAYS

PATH 22

NELSON ENGINEERING
P.O. BOX 1599, JACKSON WYOMING
(307) 733-2087

TETON COUNTY WYOMING

TOWN OF JACKSON WYOMING

DRAWING TITLE
EMILY STEVEN'S STRIPING DETAIL

REVISIONS

DRAWING NO
2.8

JOB NO
10-124-03

DATE
1/07/2015

S:\Proj2000\124-06 (Path 22 West - Pathway Planning East of River)\To WYDOT\C1-PLAN-PROF-CL PATHWAY.DWG (EMILY'S ACCESS STRIPING) - Jan 07 2015 01:19:23 pm PLOTTED BY: karichner

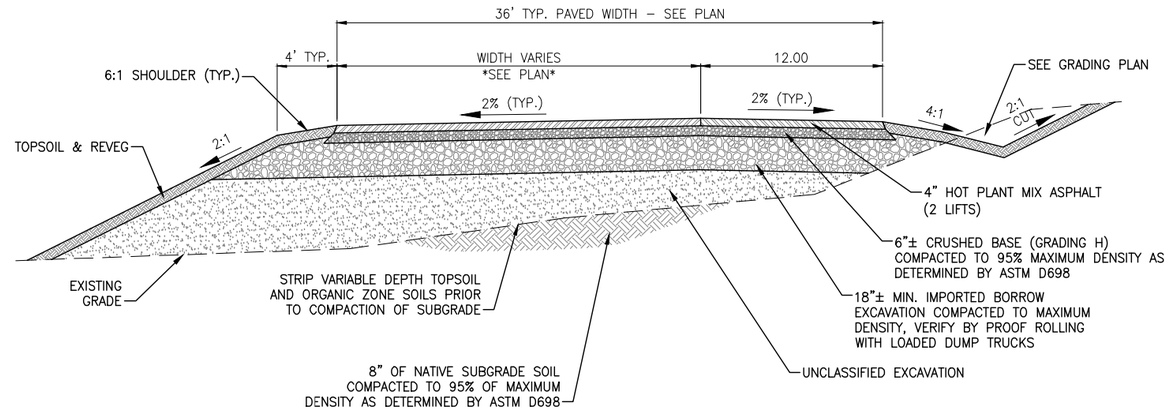

X / 2.9 TYPICAL ROAD SECTION
Scale:N.T.S.

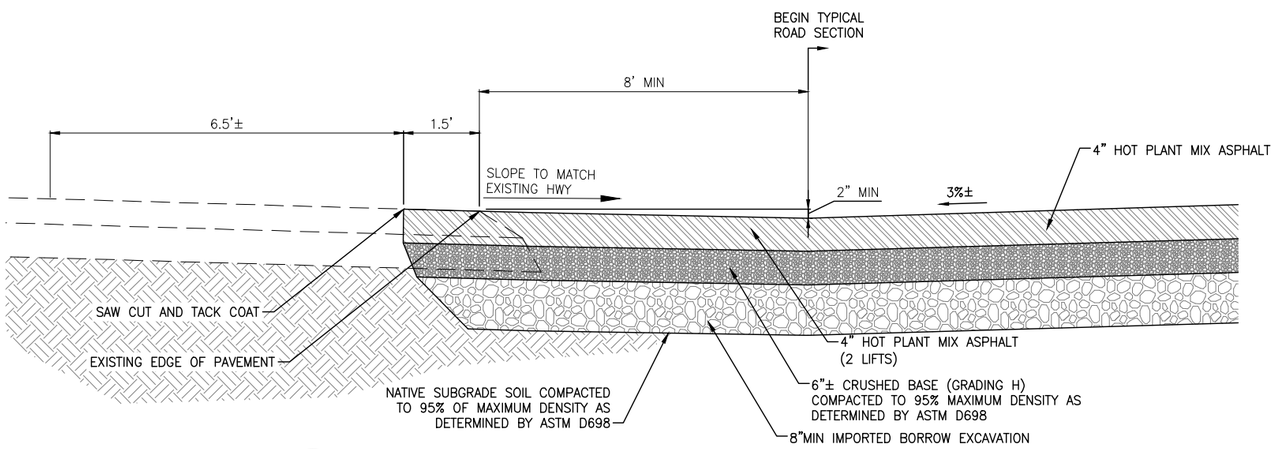

Y / 2.9 APPROACH SECTION
Scale:N.T.S.

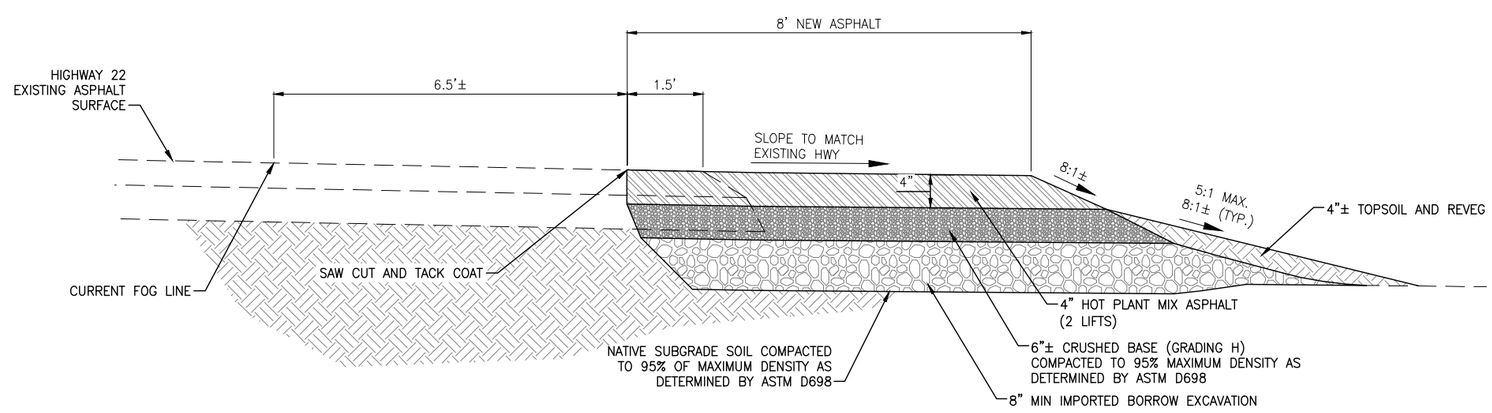

Z / 2.9 DECELERATION LANE SECTION
Scale:N.T.S.

JACKSON HOLE COMMUNITY PATHWAYS
PATH 22

NELSON ENGINEERING
P.O. BOX 1599, JACKSON WYOMING
(307) 733-2087

TETON COUNTY

TOWN OF JACKSON WYOMING

DRAWING TITLE
EMILY PAVEMENT SECTIONS AND DETAILS

REVISIONS

DRAWING NO 2.9
JOB NO 10-124-03
DATE 1/07/2015

S:\Proj2000\124-06 (Path 22 West - Pathway Planning East of River)\To WYDOT\C1-PLAN-PROF-CL PATHWAY.DWG (SECTIONS) - Jan 07 2015 01:20:01 pm PLOTTED BY: karichner

LINE TABLE: ALIGNMENTS		
LINE #	BEARING	LENGTH
L1	N28.474045E	13.33
L2	N02.462000W	51.48

CURVE TABLE: ALIGNMENTS					
CURVE #	ARC LENGTH	RADIUS	CHORD BEARING	CHORD LENGTH	DELTA ANGLE
C1	27.55	50.00	N13°00'40"E	27.20	031°34'00"
C2	31.16	50.00	N20°37'35"W	30.66	035°42'29"
C3	37.80	49.03	N16°30'34"W	36.87	044°10'08"

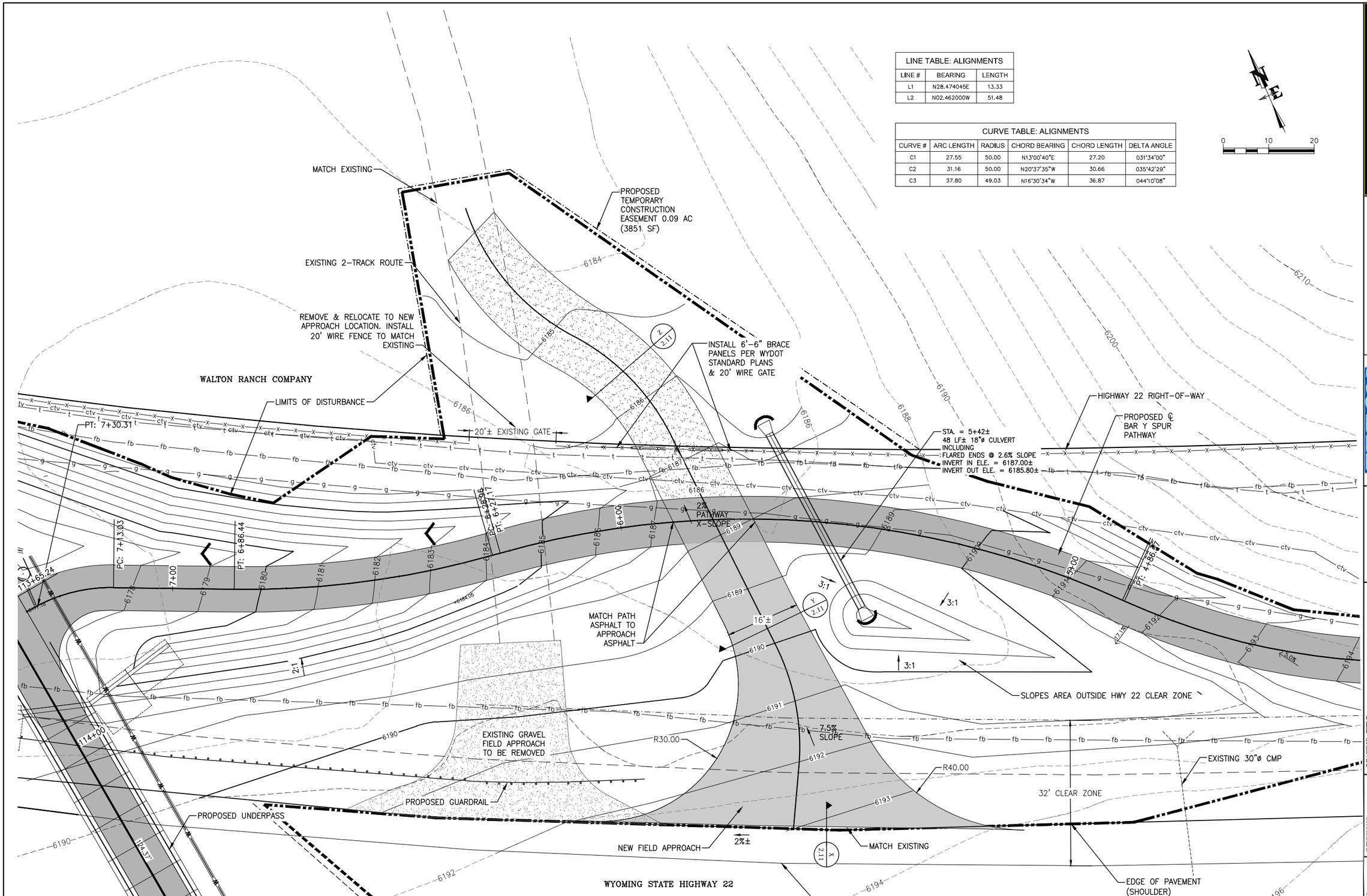

1 / 2.10 WALTON RANCH FIELD APPROACH PLAN

Scale: 1"=20'

JACKSON HOLE COMMUNITY PATHWAYS — PATH 22

NELSON ENGINEERING
P.O. BOX 1599, JACKSON WYOMING
(307) 733-2087

TETON COUNTY

TOWN OF JACKSON

DRAWING TITLE
WALTON FIELD APPROACH
APPROACH PERMIT DRAWING
WYDOT

REVISIONS

DRAWING NO 2.10
JOB NO 10-124-03
DATE 1/07/2015

S:\Proj2010\124-07 (Path22 Middle Segment)\Drawings\Layouts\Walton Field Approach.dwg - Jan 07 2015 01:23:23 pm PLOTTED BY: karichner

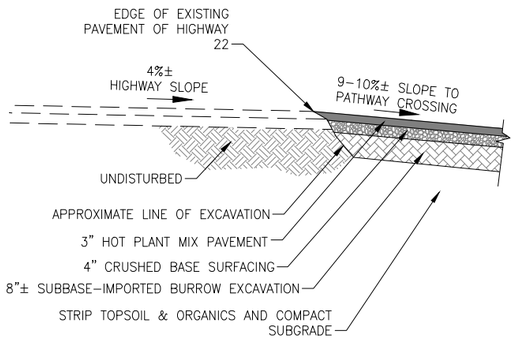

X / 2.11 HWY 22 EDGE SECTION
Scale:N.T.S.

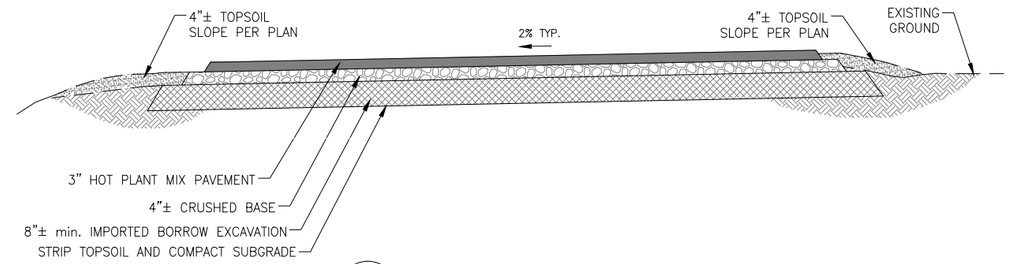

Y / 2.11 ASPHALT APPROACH SECTION
Scale:N.T.S.

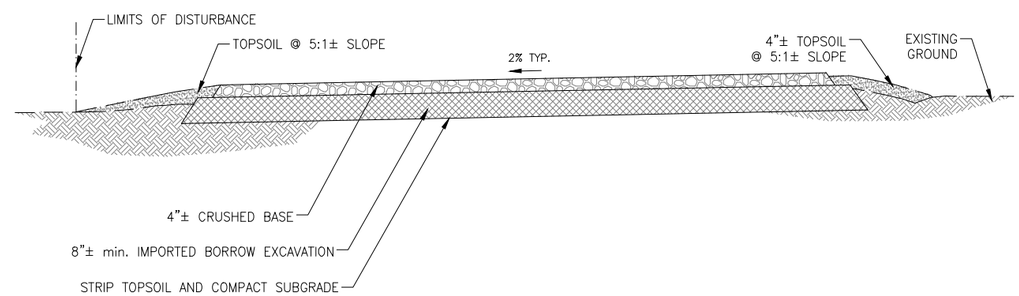

Z / 2.11 GRAVEL APPROACH SECTION
Scale:N.T.S.

PATH 22 — JACKSON HOLE COMMUNITY PATHWAYS

NELSON ENGINEERING
P.O. BOX 1599, JACKSON WYOMING
(307) 733–2087

TETON COUNTY

TOWN OF JACKSON

DRAWING TITLE
WALTON FIELD APPROACH
DETAILS

REVISIONS

DRAWING NO 2.11
JOB NO 10–124–03
DATE 1/07/2015

S:\Proj2010\124-07 (Path22 Middle Segment)\Drawings\Layouts\Walton Field Approachdwg (Walton Approach 2.11) - Jan 07 2015 01:22:23 pm PLOTTED BY: kerichner

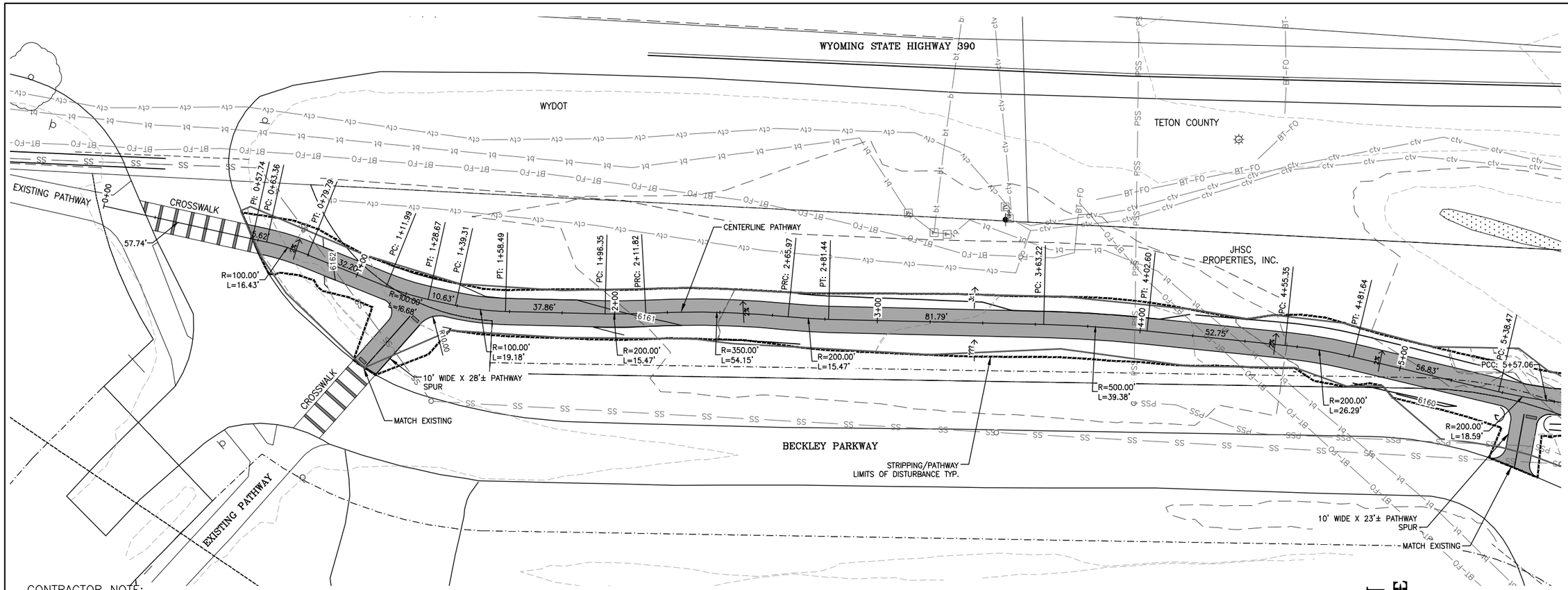

CONTRACTOR NOTE:

CAUTION: UNDERGROUND UTILITY LOCATIONS ARE NOT GUARANTEED, NOR IS THERE ANY GUARANTEE THAT ALL EXISTING UTILITIES (WHETHER FUNCTIONAL OR ABANDONED) WITHIN THE PROJECT AREA ARE SHOWN ON THESE DRAWINGS. THE CONTRACTOR SHALL DETERMINE THE EXACT LOCATION OF ALL UNDERGROUND UTILITIES BEFORE STARTING WORK. THE CONTRACTOR SHALL BE RESPONSIBLE FOR ALL DAMAGE RESULTING FROM CONTRACTORS WORK.

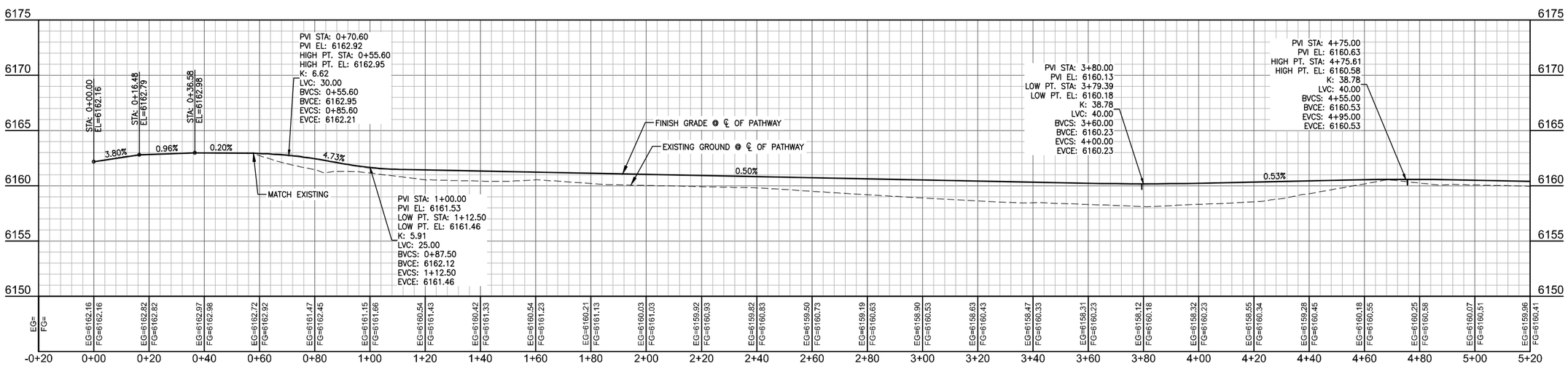

JACKSON HOLE COMMUNITY PATHWAYS PATH 22

NELSON ENGINEERING
P.O. BOX 1599, JACKSON WYOMING
(307) 733-2087

TETON COUNTY WYOMING

DRAWING TITLE
PATHWAY ALIGNMENT
PLAN & PROFILE
STA. 0+00 TO 5+20

REVISIONS

DRAWING NO 3.0
JOB NO 10-124-03
DATE 1/07/2015

S:\Proj2010\124-02 (Path 22 (Vest)- Design Phase\Drawings\LAYOUT\PATHWAY LAYOUTS\Pathway Alignment PAP 0+00 TO 15+00.dwg (9+00 to 5+00) - Jan 07 2015 08:26:51 pm PLOTTED BY: kurichner

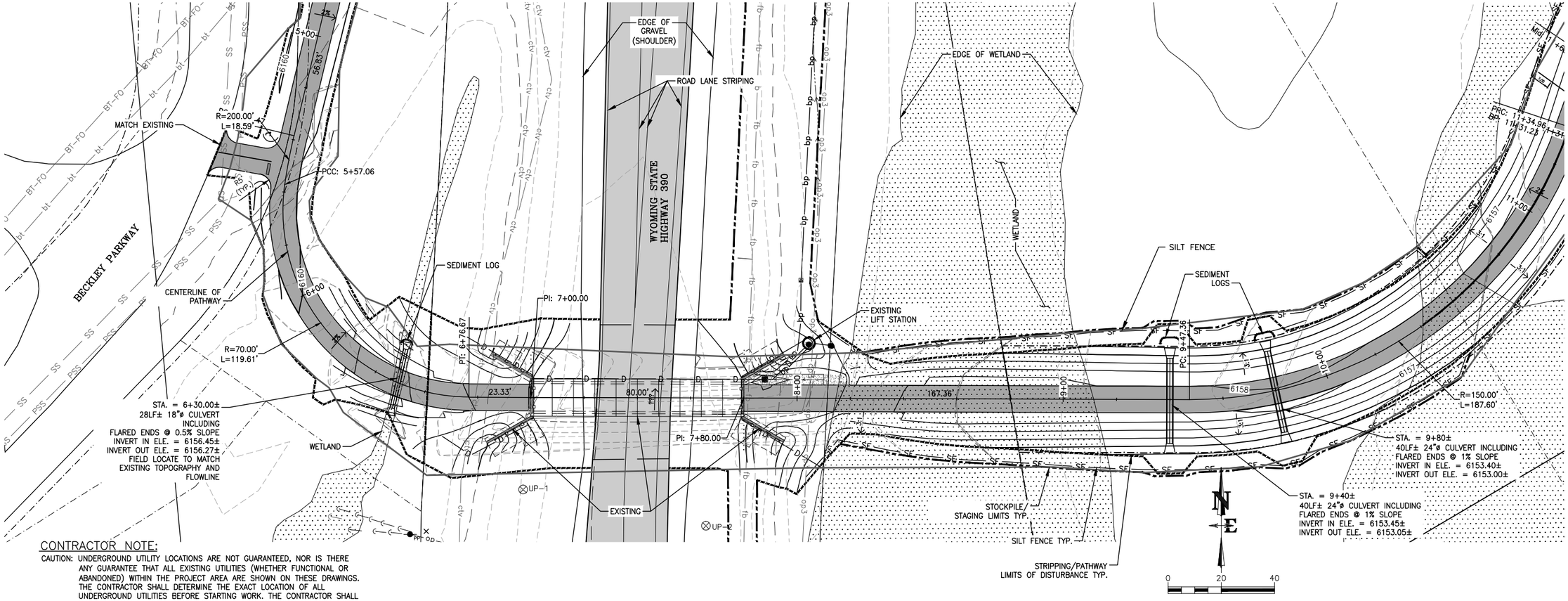

CONTRACTOR NOTE:

CAUTION: UNDERGROUND UTILITY LOCATIONS ARE NOT GUARANTEED, NOR IS THERE ANY GUARANTEE THAT ALL EXISTING UTILITIES (WHETHER FUNCTIONAL OR ABANDONED) WITHIN THE PROJECT AREA ARE SHOWN ON THESE DRAWINGS. THE CONTRACTOR SHALL DETERMINE THE EXACT LOCATION OF ALL UNDERGROUND UTILITIES BEFORE STARTING WORK. THE CONTRACTOR SHALL BE RESPONSIBLE FOR ALL DAMAGE RESULTING FROM CONTRACTORS WORK.

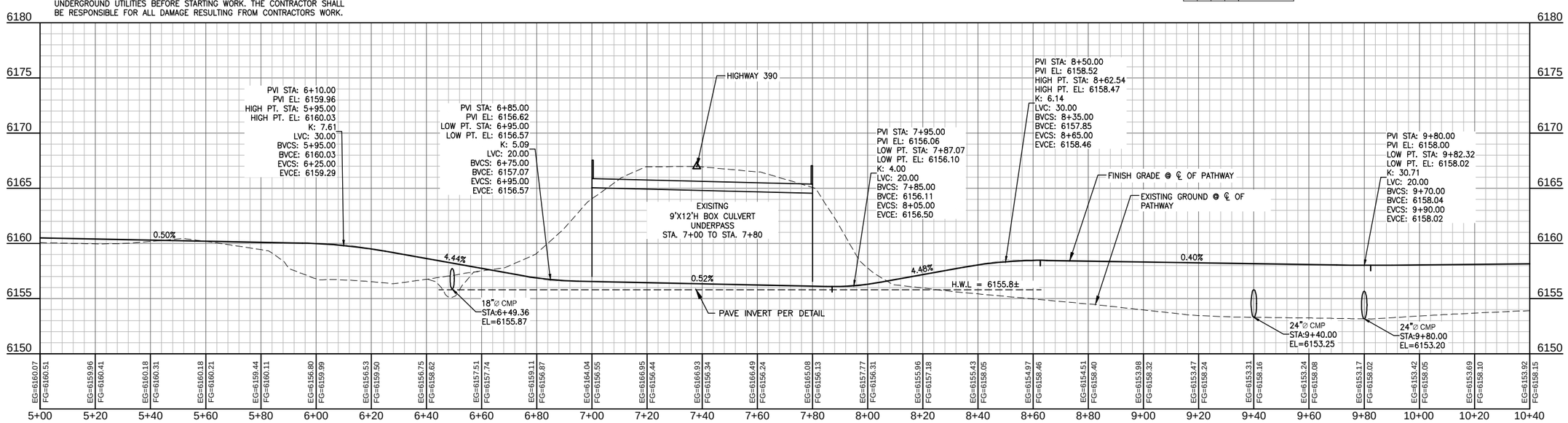

NELSON ENGINEERING
P.O. BOX 1599, JACKSON WYOMING
(307) 733-2087

DRAWING TITLE
PATHWAY ALIGNMENT
PLAN & PROFILE
STA. 5+00 TO 10+40

REVISIONS

DRAWING NO 3.1
JOB NO 10-124-03
DATE 1/07/2015

S:\Proj2010\124-02 (Path 22 (West)- Design Phase\Drawings\LAYOUT\PATHWAY LAYOUT\Pathway Alignment P&P 0+00 TO 15+00.dwg 15+00 to 10+40 - Jan 07 2015 8:20:04 pm PLOTTED BY: kurichner

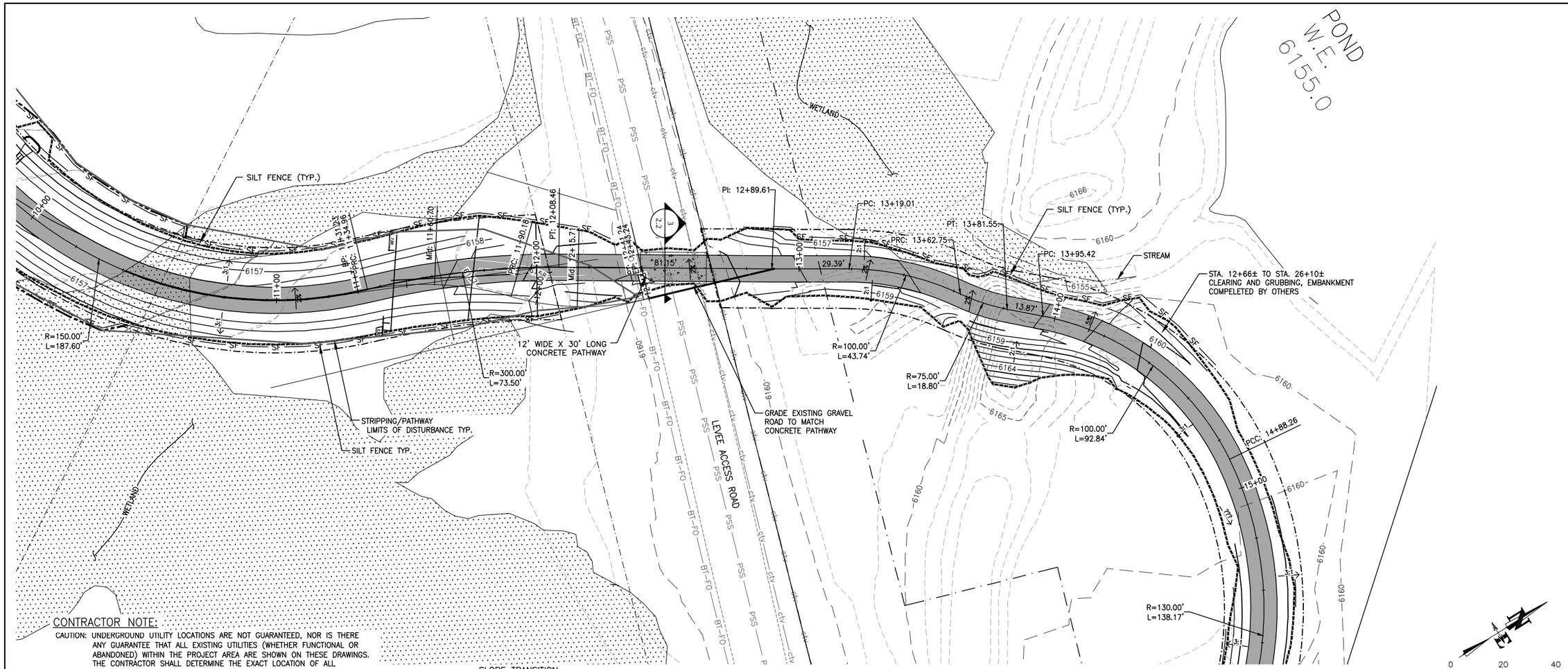

CONTRACTOR NOTE:

CAUTION: UNDERGROUND UTILITY LOCATIONS ARE NOT GUARANTEED, NOR IS THERE ANY GUARANTEE THAT ALL EXISTING UTILITIES (WHETHER FUNCTIONAL OR ABANDONED) WITHIN THE PROJECT AREA ARE SHOWN ON THESE DRAWINGS. THE CONTRACTOR SHALL DETERMINE THE EXACT LOCATION OF ALL UNDERGROUND UTILITIES BEFORE STARTING WORK. THE CONTRACTOR SHALL BE RESPONSIBLE FOR ALL DAMAGE RESULTING FROM CONTRACTORS WORK.

SLOPE TRANSITION:

1. TRANSITION CROSS-SLOPE RIGHT 2% TO LEFT 2% FROM STA. 14+20.00± TO 14+40.00±

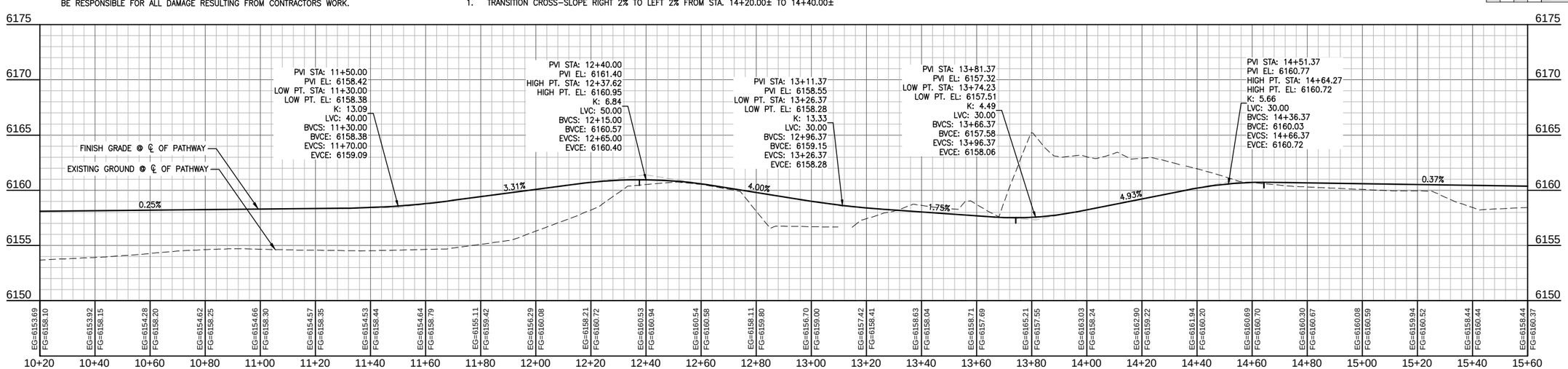

JACKSON HOLE COMMUNITY PATHWAYS

PATH 22

NELSON ENGINEERING
P.O. BOX 1599, JACKSON WYOMING
(307) 733-2087

TETON COUNTY WYOMING

TOWN OF JACKSON WYOMING

DRAWING TITLE
PATHWAY ALIGNMENT
PLAN & PROFILE
STA. 10+40 TO 15+60

REVISIONS

DRAWING NO 3.2

JOB NO 10-124-03

DATE 1/07/2015

S:\Proj2000\124-02 (Path 22 (West)- Design Phase\Drawings\LAYOUT\PATHWAY LAYOUTS\Pathway Alignment PLP 0+00 TO 15+00.dwg (10+20 to 15+60) - Jan 07 2015 01:23:15 pm PLOTTED BY: karichner

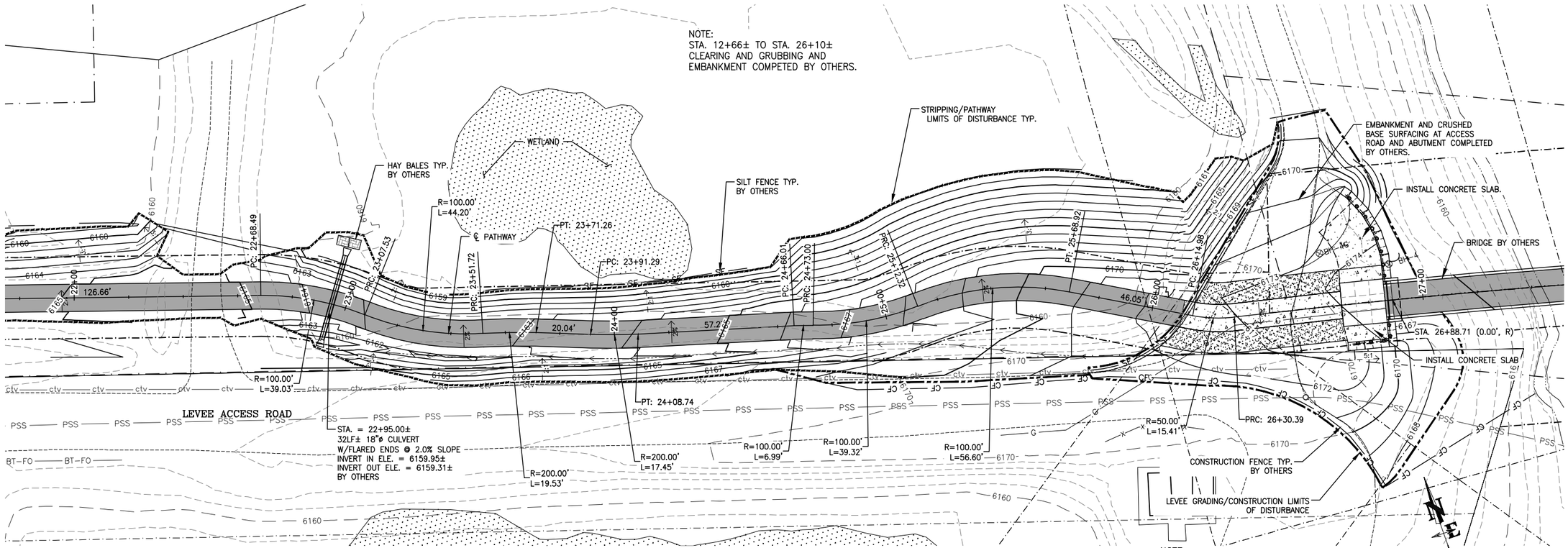

CONTRACTOR NOTE:

CAUTION: UNDERGROUND UTILITY LOCATIONS ARE NOT GUARANTEED, NOR IS THERE ANY GUARANTEE THAT ALL EXISTING UTILITIES (WHETHER FUNCTIONAL OR ABANDONED) WITHIN THE PROJECT AREA ARE SHOWN ON THESE DRAWINGS. THE CONTRACTOR SHALL DETERMINE THE EXACT LOCATION OF ALL UNDERGROUND UTILITIES BEFORE STARTING WORK. THE CONTRACTOR SHALL BE RESPONSIBLE FOR ALL DAMAGE RESULTING FROM CONTRACTORS WORK.

NOTES:

1. 10 FEET WIDE PATHWAY WITH 2 FEET SHOULDER ON BOTH SIDES FROM STA. 18+70± TO 22+15±

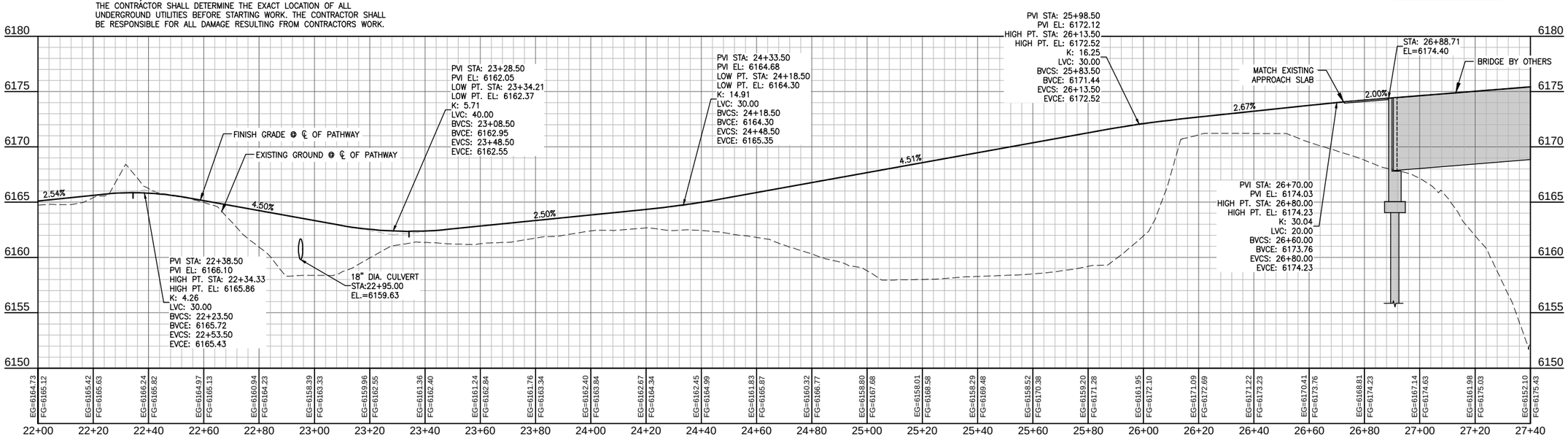

JACKSON HOLE COMMUNITY PATHWAYS
PATH 22

NELSON ENGINEERING
P.O. BOX 1599, JACKSON WYOMING
(307) 733-2087

TETON COUNTY WYOMING

TOWN OF JACKSON

DRAWING TITLE
PATHWAY ALIGNMENT
PLAN & PROFILE
STA. 22+20 TO 27+40

REVISIONS

DRAWING NO 3.4
JOB NO 10-124-03
DATE 1/07/2015

S:\Proj2010\124-02 (Path 22 (West)- Design Phase\Drawings\LAYOUT\PATHWAY LAYOUTS\Pathway Alignment P&P (4+00 TO 34+00).dwg (22+00 to 27+40) - Jan 07 2015 01:23:43 pm PLOTTED BY kurichner

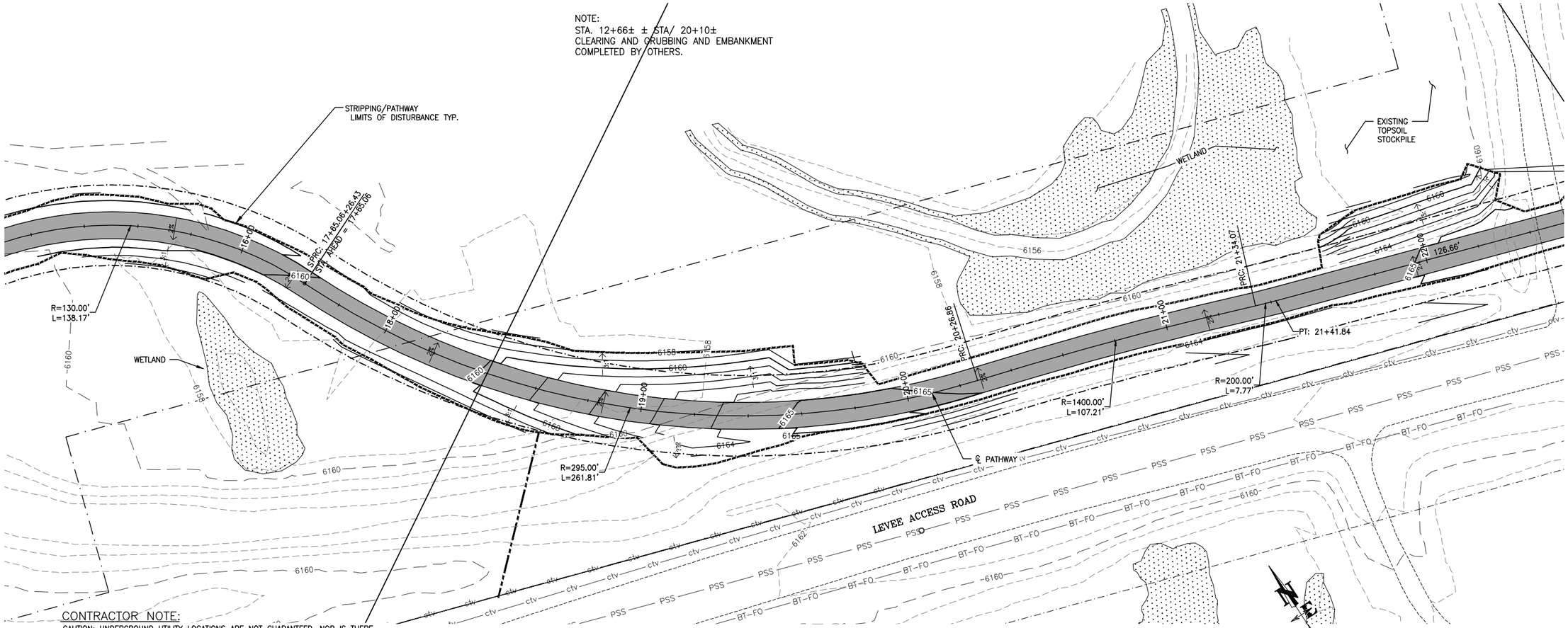

CONTRACTOR NOTE:

CAUTION: UNDERGROUND UTILITY LOCATIONS ARE NOT GUARANTEED, NOR IS THERE ANY GUARANTEE THAT ALL EXISTING UTILITIES (WHETHER FUNCTIONAL OR ABANDONED) WITHIN THE PROJECT AREA ARE SHOWN ON THESE DRAWINGS. THE CONTRACTOR SHALL DETERMINE THE EXACT LOCATION OF ALL UNDERGROUND UTILITIES BEFORE STARTING WORK. THE CONTRACTOR SHALL BE RESPONSIBLE FOR ALL DAMAGE RESULTING FROM CONTRACTORS WORK.

NOTES:

1. 10 FEET WIDE PATHWAY WITH 2 FEET SHOULDER ON BOTH SIDES FROM STA. 18+70± TO 22+15±

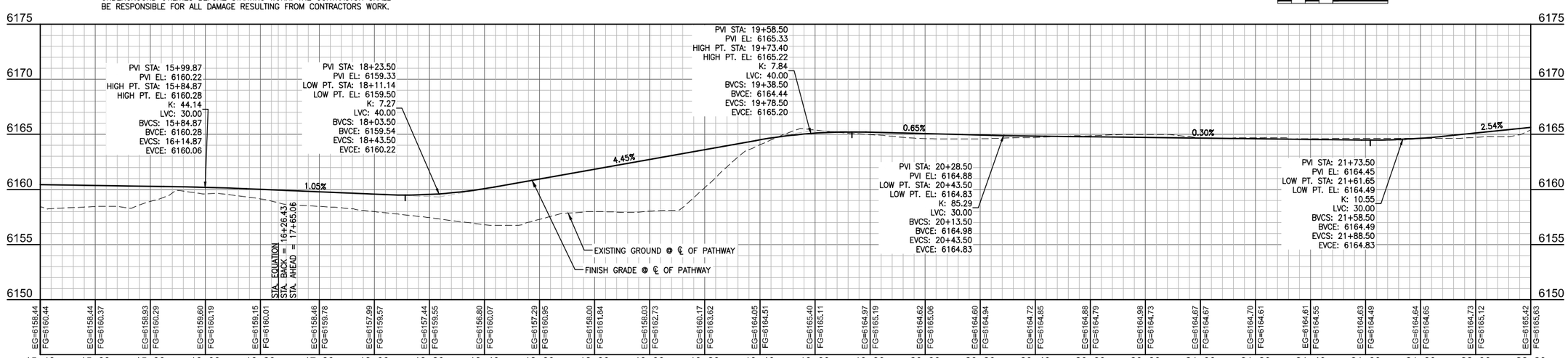

PATH 22

NELSON ENGINEERING
P.O. BOX 1599, JACKSON WYOMING
(307) 733-2087

TETON COUNTY WYOMING

DRAWING TITLE
PATHWAY ALIGNMENT
PLAN & PROFILE
STA. 15+40 TO 22+20

REVISIONS

DRAWING NO 3.3
JOB NO 10-124-03
DATE 1/07/2015

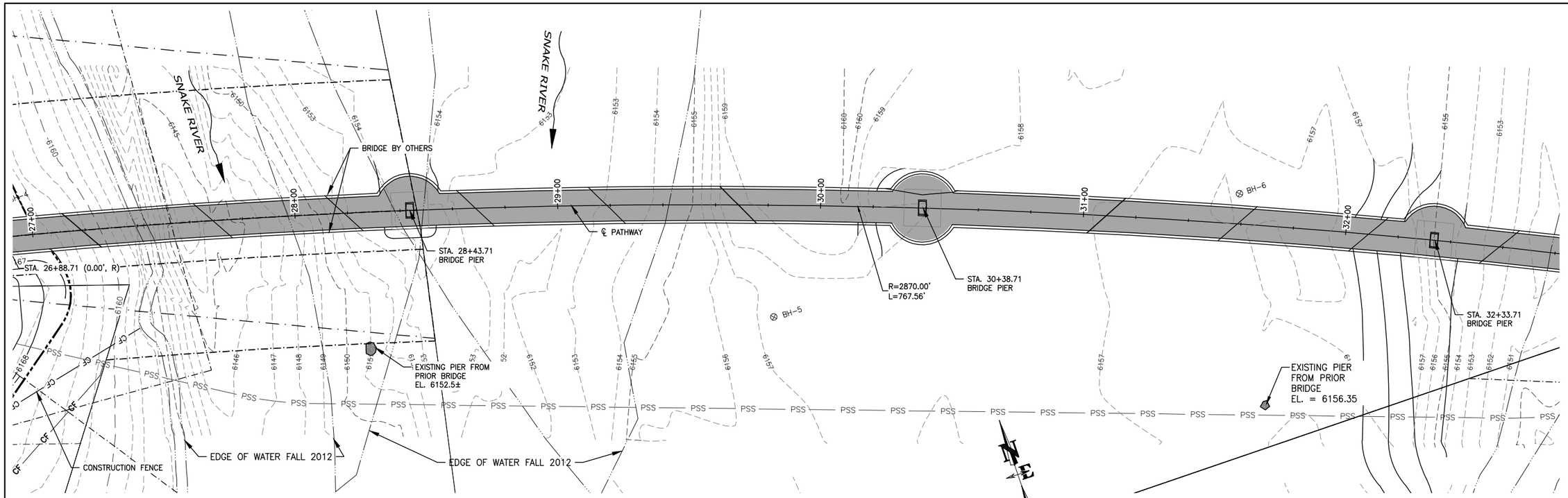

CONTRACTOR NOTE:

CAUTION: UNDERGROUND UTILITY LOCATIONS ARE NOT GUARANTEED, NOR IS THERE ANY GUARANTEE THAT ALL EXISTING UTILITIES (WHETHER FUNCTIONAL OR ABANDONED) WITHIN THE PROJECT AREA ARE SHOWN ON THESE DRAWINGS. THE CONTRACTOR SHALL DETERMINE THE EXACT LOCATION OF ALL UNDERGROUND UTILITIES BEFORE STARTING WORK. THE CONTRACTOR SHALL BE RESPONSIBLE FOR ALL DAMAGE RESULTING FROM CONTRACTORS WORK.

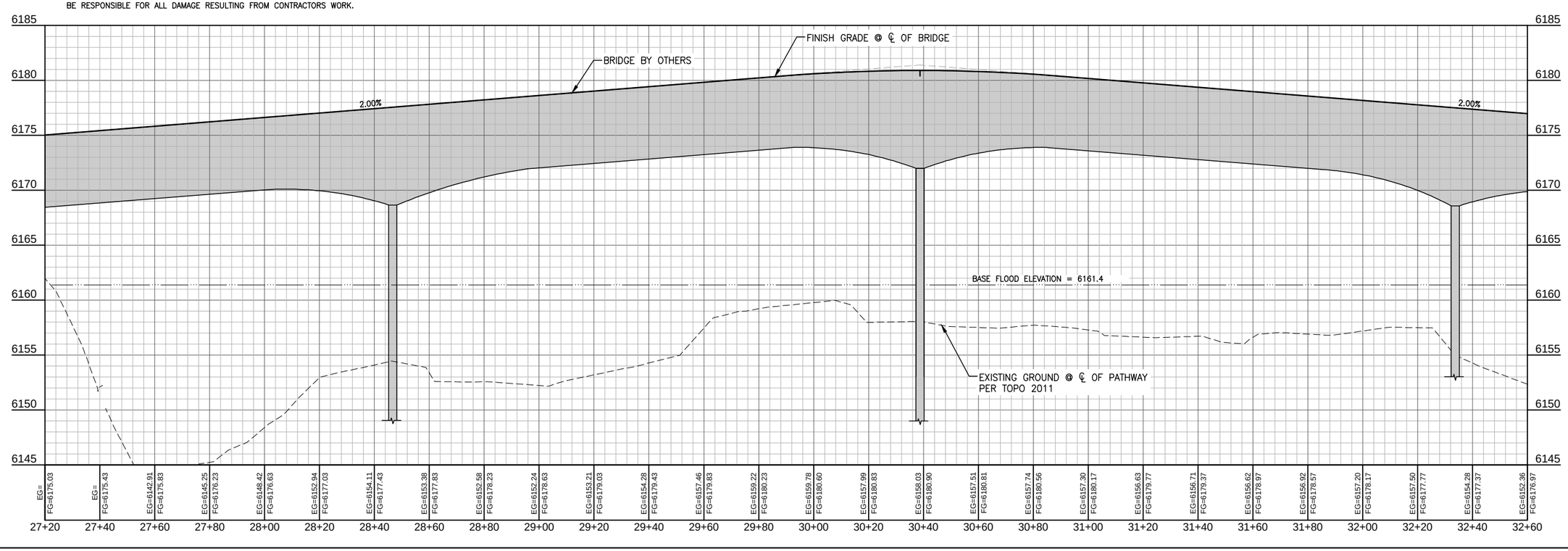

PATH 22

NELSON ENGINEERING
P.O. BOX 1599, JACKSON WYOMING
(307) 733-2087

TETON COUNTY

DRAWING TITLE
PATHWAY ALIGNMENT
PLAN & PROFILE
STA. 27+20 TO 32+60

REVISIONS

DRAWING NO 3.5

JOB NO 10-124-03

DATE 1/07/2015

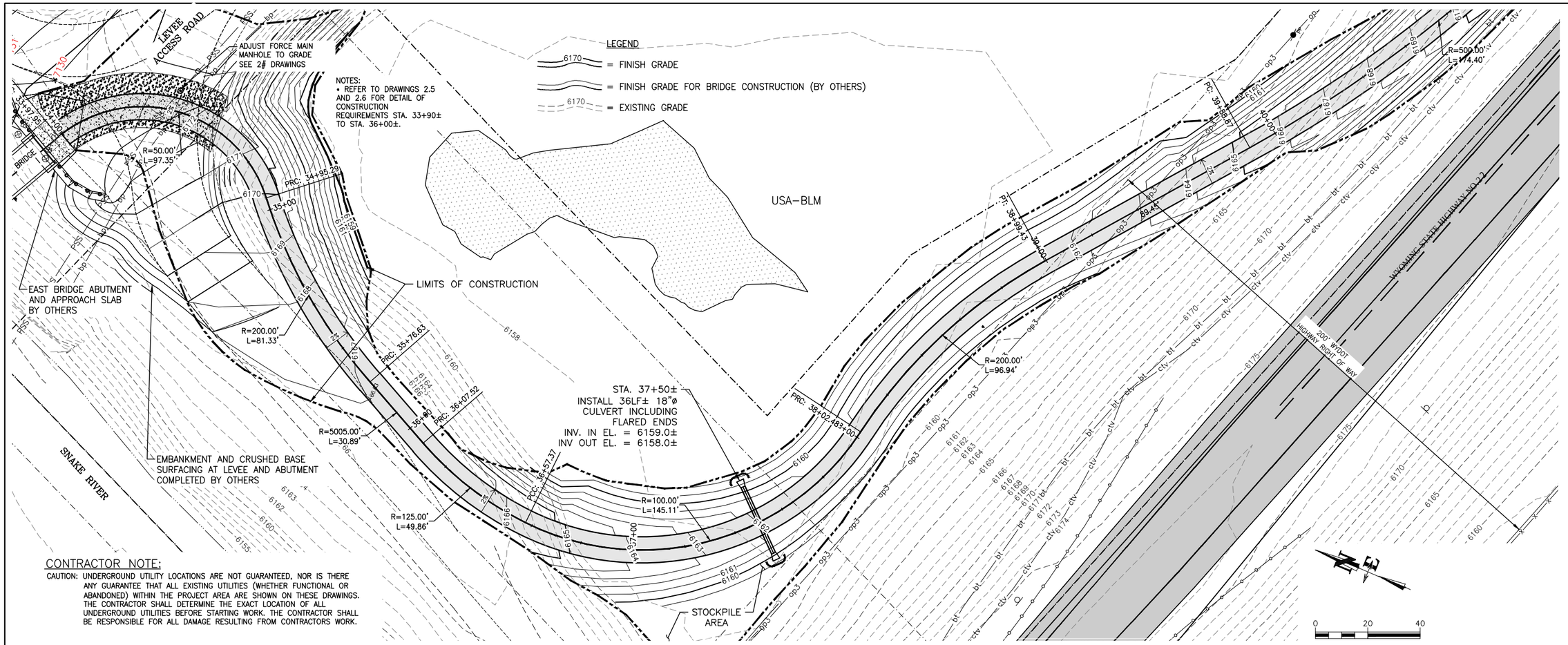

CONTRACTOR NOTE:

CAUTION: UNDERGROUND UTILITY LOCATIONS ARE NOT GUARANTEED, NOR IS THERE ANY GUARANTEE THAT ALL EXISTING UTILITIES (WHETHER FUNCTIONAL OR ABANDONED) WITHIN THE PROJECT AREA ARE SHOWN ON THESE DRAWINGS. THE CONTRACTOR SHALL DETERMINE THE EXACT LOCATION OF ALL UNDERGROUND UTILITIES BEFORE STARTING WORK. THE CONTRACTOR SHALL BE RESPONSIBLE FOR ALL DAMAGE RESULTING FROM CONTRACTORS WORK.

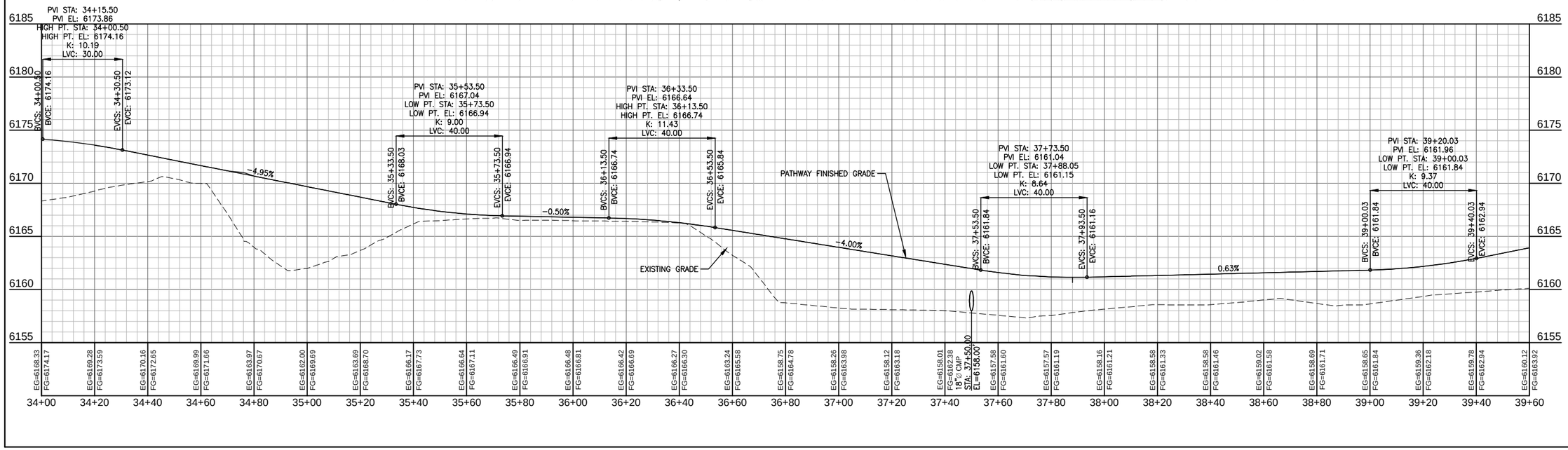

NELSON ENGINEERING
P.O. BOX 1599, JACKSON WYOMING
(307) 733-2087

DRAWING TITLE
PATHWAY ALIGNENT
PLAN & PROFILE
STA. 34+00.00 - 39+60

REVISIONS

DRAWING NO 3.6
JOB NO 10-124-03
DATE 1/07/2015

S:\Proj2010\124-06 (Path 22 West - Pathway Planning East of River)\Emilys Pathway 22 West.dwg (STA 34+00.00 - 39+60) - Jan 07 2015 02:55:51 pm PLOTTED BY kurichner

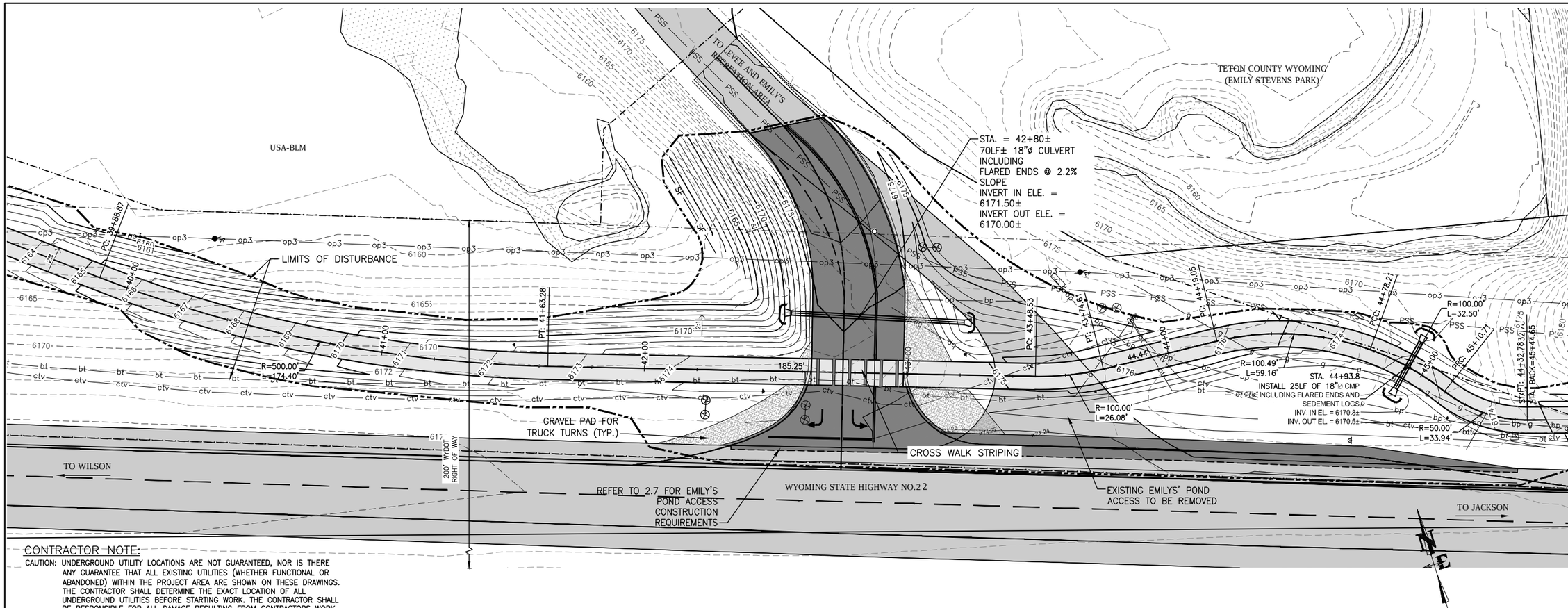

CONTRACTOR NOTE:

CAUTION: UNDERGROUND UTILITY LOCATIONS ARE NOT GUARANTEED, NOR IS THERE ANY GUARANTEE THAT ALL EXISTING UTILITIES (WHETHER FUNCTIONAL OR ABANDONED) WITHIN THE PROJECT AREA ARE SHOWN ON THESE DRAWINGS. THE CONTRACTOR SHALL DETERMINE THE EXACT LOCATION OF ALL UNDERGROUND UTILITIES BEFORE STARTING WORK. THE CONTRACTOR SHALL BE RESPONSIBLE FOR ALL DAMAGE RESULTING FROM CONTRACTORS WORK.

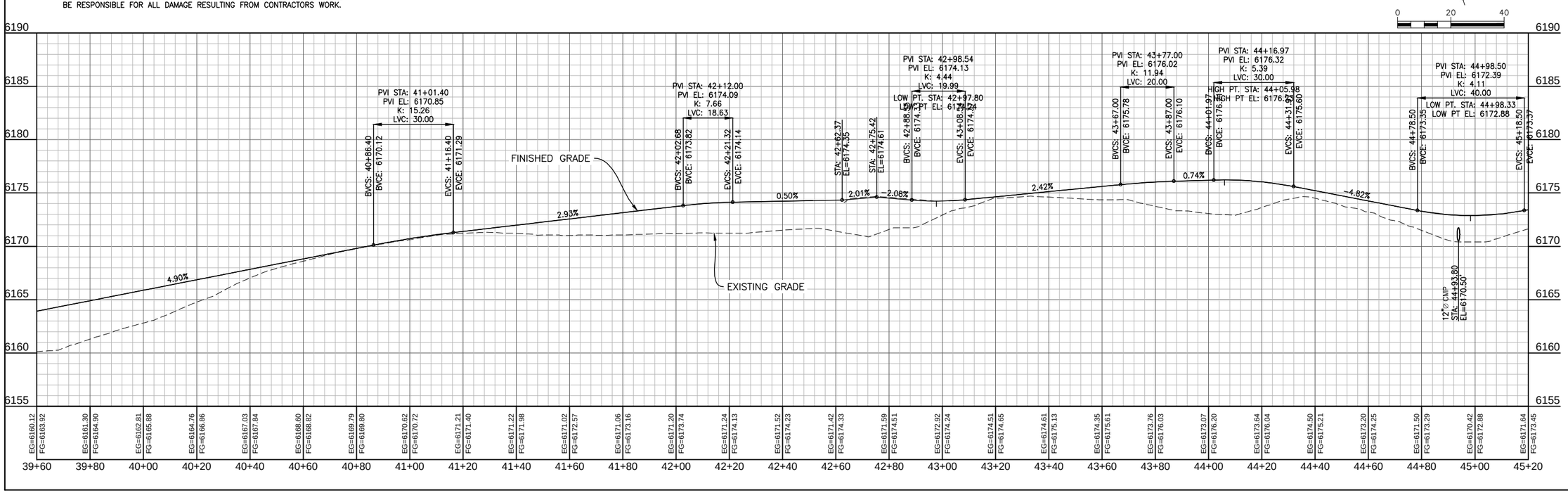

S:\Proj2010\124-06 (Path 22 West - Pathway Planning East of River)\Emilys Pathway 22 West.dwg <STA 39+60 - 45+20> - Jan 07 2015 8:26:18 pm PLOTTED BY: kurtchner

JACKSON HOLE COMMUNITY PATHWAYS

PATH 22

NELSON ENGINEERING
P.O. BOX 1599, JACKSON WYOMING
(307) 733-2087

TETON COUNTY

TOWN OF JACKSON

DRAWING TITLE
PATHWAY
PLAN & PROFILE
STA. 39+60 - 45+20

REVISIONS

DRAWING NO 3.7

JOB NO 10-124-03

DATE 1/07/2015

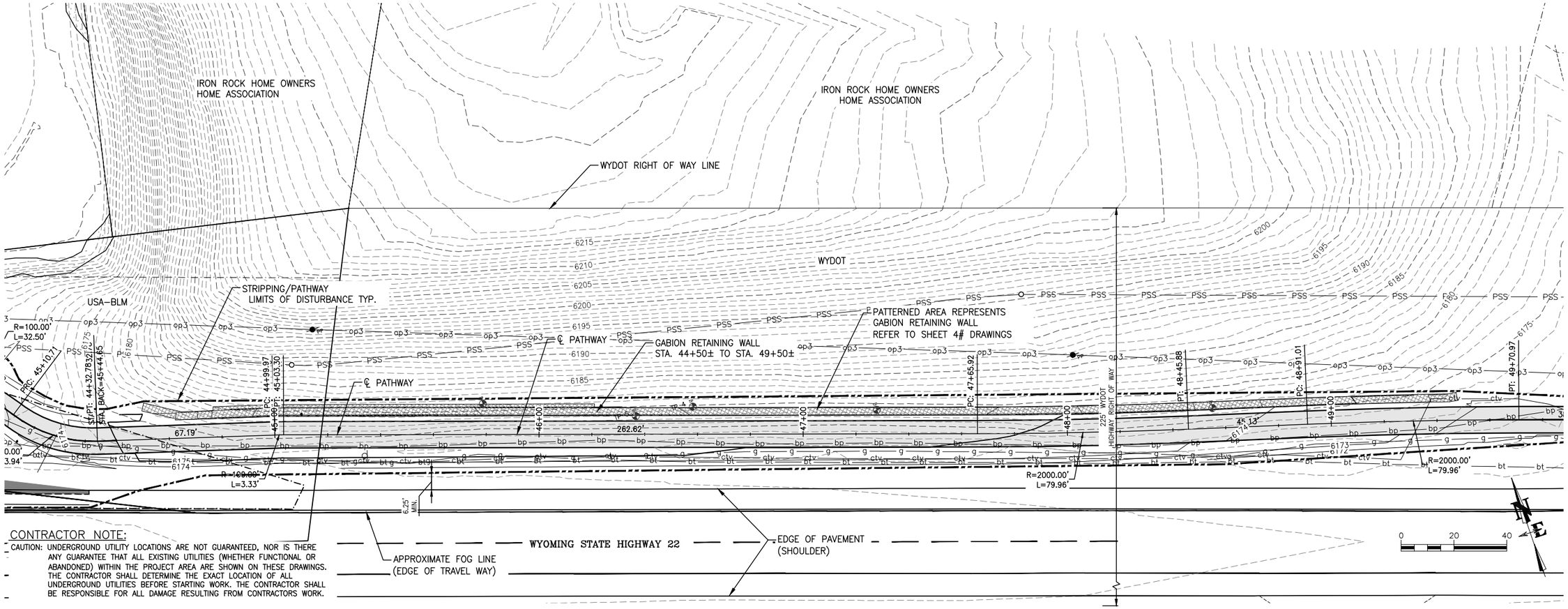

CONTRACTOR NOTE:

CAUTION: UNDERGROUND UTILITY LOCATIONS ARE NOT GUARANTEED, NOR IS THERE ANY GUARANTEE THAT ALL EXISTING UTILITIES (WHETHER FUNCTIONAL OR ABANDONED) WITHIN THE PROJECT AREA ARE SHOWN ON THESE DRAWINGS. THE CONTRACTOR SHALL DETERMINE THE EXACT LOCATION OF ALL UNDERGROUND UTILITIES BEFORE STARTING WORK. THE CONTRACTOR SHALL BE RESPONSIBLE FOR ALL DAMAGE RESULTING FROM CONTRACTORS WORK.

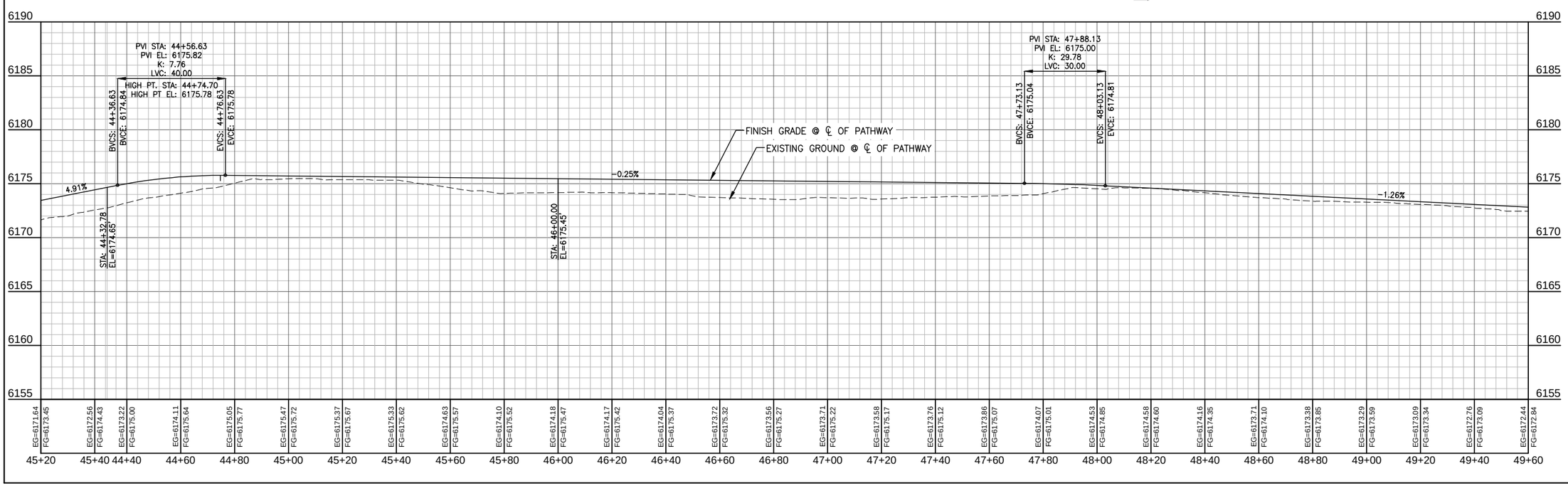

NELSON ENGINEERING
P.O. BOX 1599, JACKSON WYOMING
(307) 733-2087

DRAWING TITLE
PATHWAY ALIGNMENT
PLAN & PROFILE
STA. 45+20 TO 49+60

REVISIONS

DRAWING NO 3.8
JOB NO 10-124-03
DATE 1/07/2015

S:\Proj2010\124-06 Path 22 West - Pathway Planning East of River\Valys Pathway 22 Westbeg (45+20 to 49+60) - Jan 07 2015 01:26:47 pm PLOTTED BY: kwarkiner

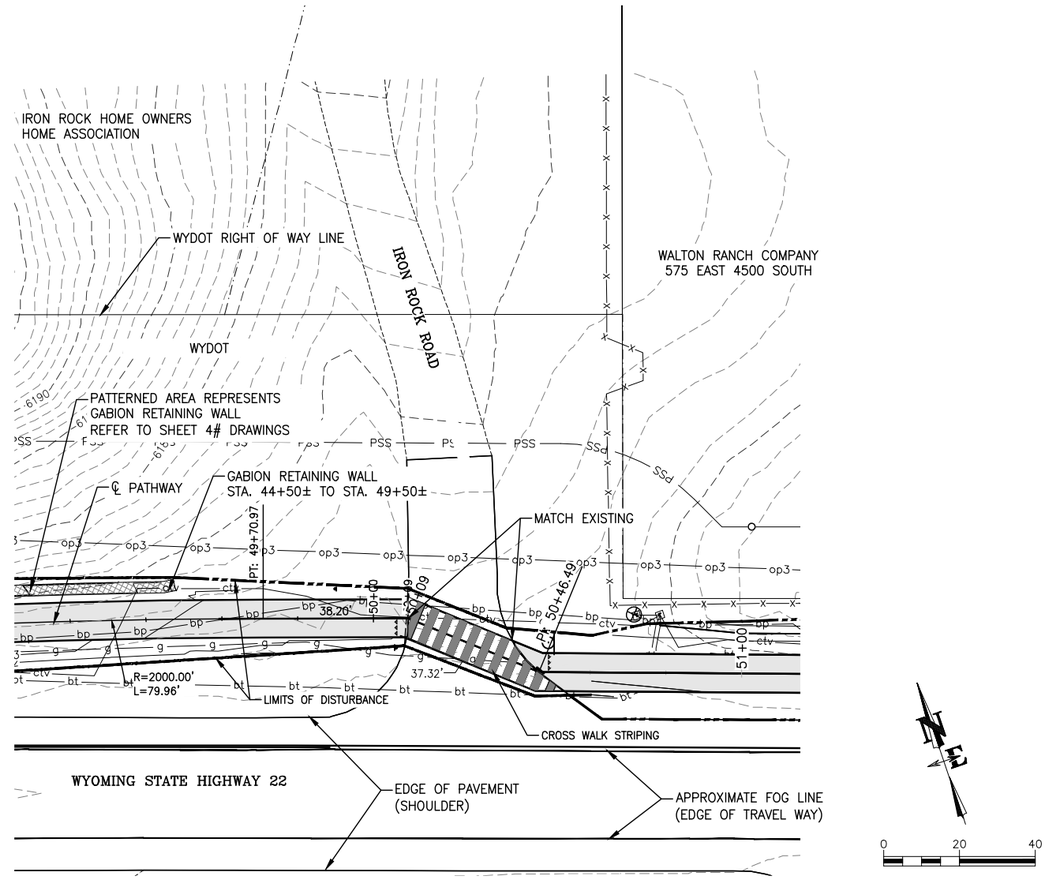

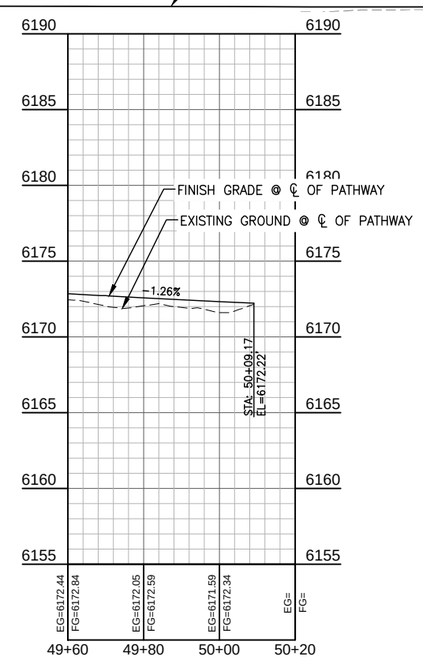

CONTRACTOR NOTE:

CAUTION: UNDERGROUND UTILITY LOCATIONS ARE NOT GUARANTEED, NOR IS THERE ANY GUARANTEE THAT ALL EXISTING UTILITIES (WHETHER FUNCTIONAL OR ABANDONED) WITHIN THE PROJECT AREA ARE SHOWN ON THESE DRAWINGS. THE CONTRACTOR SHALL DETERMINE THE EXACT LOCATION OF ALL UNDERGROUND UTILITIES BEFORE STARTING WORK. THE CONTRACTOR SHALL BE RESPONSIBLE FOR ALL DAMAGE RESULTING FROM CONTRACTORS WORK.

PATH 22

NELSON ENGINEERING
P.O. BOX 1599, JACKSON WYOMING
(307) 733-2087

TETON COUNTY

DRAWING TITLE
PATHWAY ALIGNMENT
PLAN & PROFILE
STA. 49+60 TO 50+09.17

REVISIONS

DRAWING NO 3.9
JOB NO 10-124-03
DATE 1/07/2015

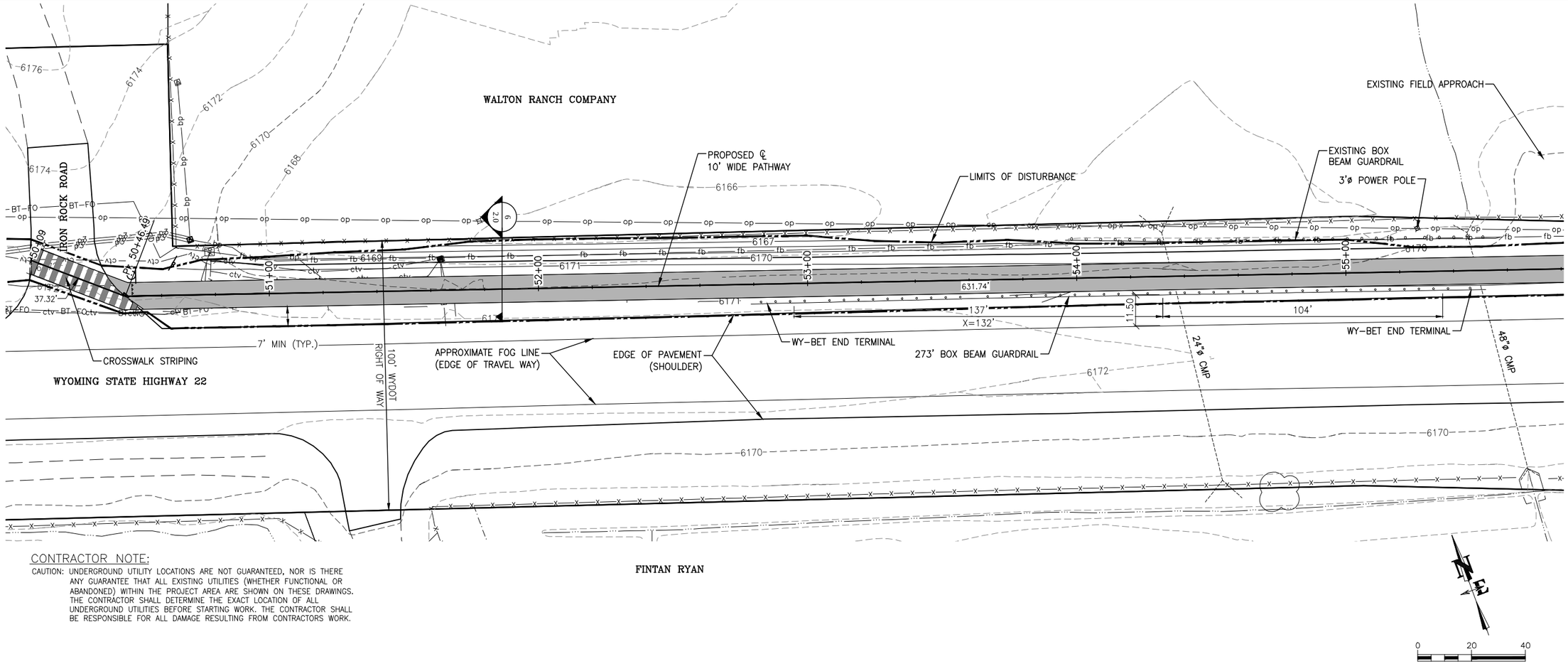

CONTRACTOR NOTE:

CAUTION: UNDERGROUND UTILITY LOCATIONS ARE NOT GUARANTEED, NOR IS THERE ANY GUARANTEE THAT ALL EXISTING UTILITIES (WHETHER FUNCTIONAL OR ABANDONED) WITHIN THE PROJECT AREA ARE SHOWN ON THESE DRAWINGS. THE CONTRACTOR SHALL DETERMINE THE EXACT LOCATION OF ALL UNDERGROUND UTILITIES BEFORE STARTING WORK. THE CONTRACTOR SHALL BE RESPONSIBLE FOR ALL DAMAGE RESULTING FROM CONTRACTORS WORK.

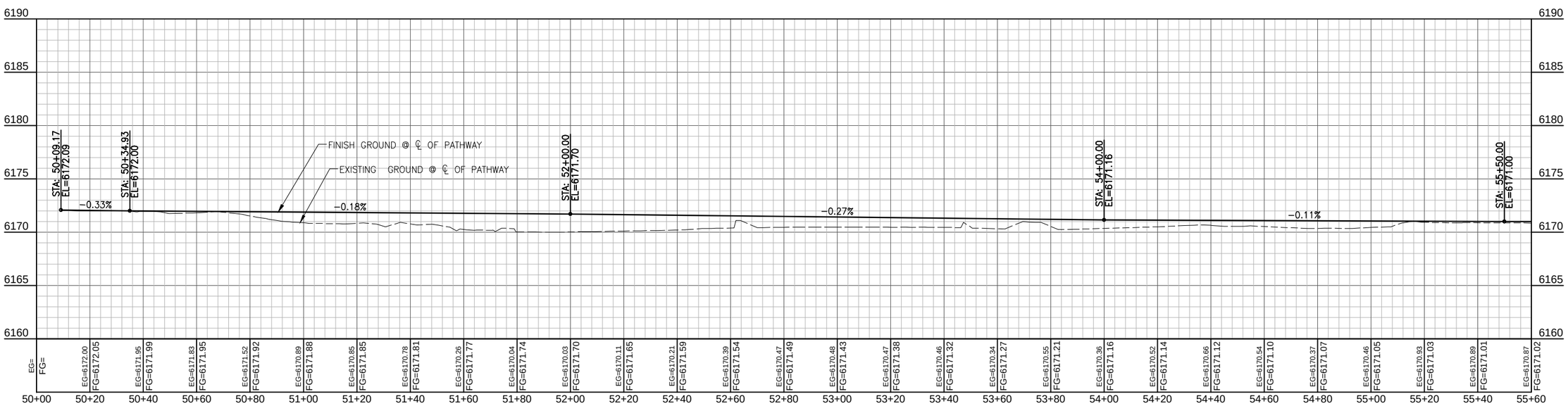

NELSON ENGINEERING
P.O. BOX 1599, JACKSON WYOMING
(307) 733-2087

DRAWING TITLE
PATHWAY ALIGNMENT
PLAN & PROFILE
STA. 50+00 – 55+60

REVISIONS

DRAWING NO 3.10
JOB NO 10-124-03
DATE 1/07/2015

S:\Proj2010\124-07 Pathway Middle Segment\Drawings\Layouts\CL175-PLAN-PROF-MIDDLE PATHWAY DESIGN CL.dwg (PATH50+00 - 55+60) - Jan 07 2015 01:28:06 pm PLOTTED BY: karlchner

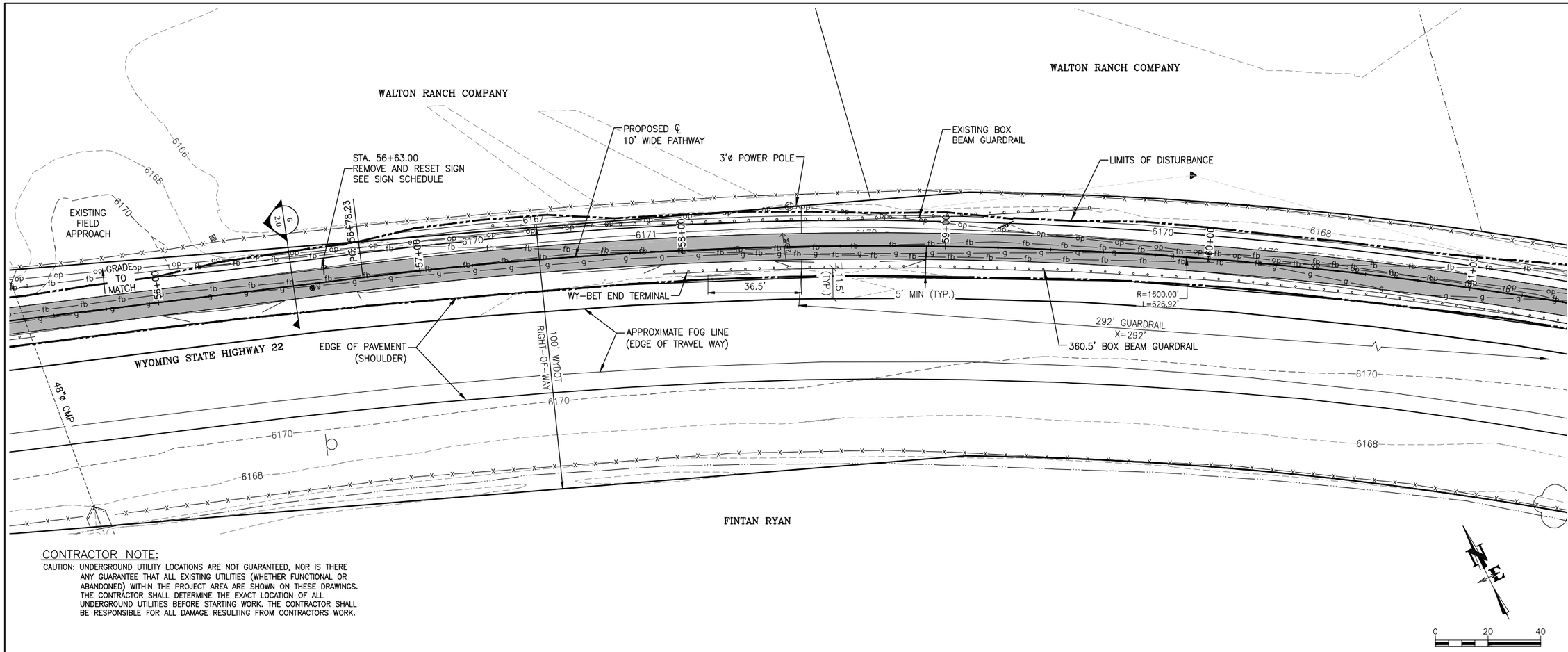

CONTRACTOR NOTE:

CAUTION: UNDERGROUND UTILITY LOCATIONS ARE NOT GUARANTEED, NOR IS THERE ANY GUARANTEE THAT ALL EXISTING UTILITIES (WHETHER FUNCTIONAL OR ABANDONED) WITHIN THE PROJECT AREA ARE SHOWN ON THESE DRAWINGS. THE CONTRACTOR SHALL DETERMINE THE EXACT LOCATION OF ALL UNDERGROUND UTILITIES BEFORE STARTING WORK. THE CONTRACTOR SHALL BE RESPONSIBLE FOR ALL DAMAGE RESULTING FROM CONTRACTORS WORK.

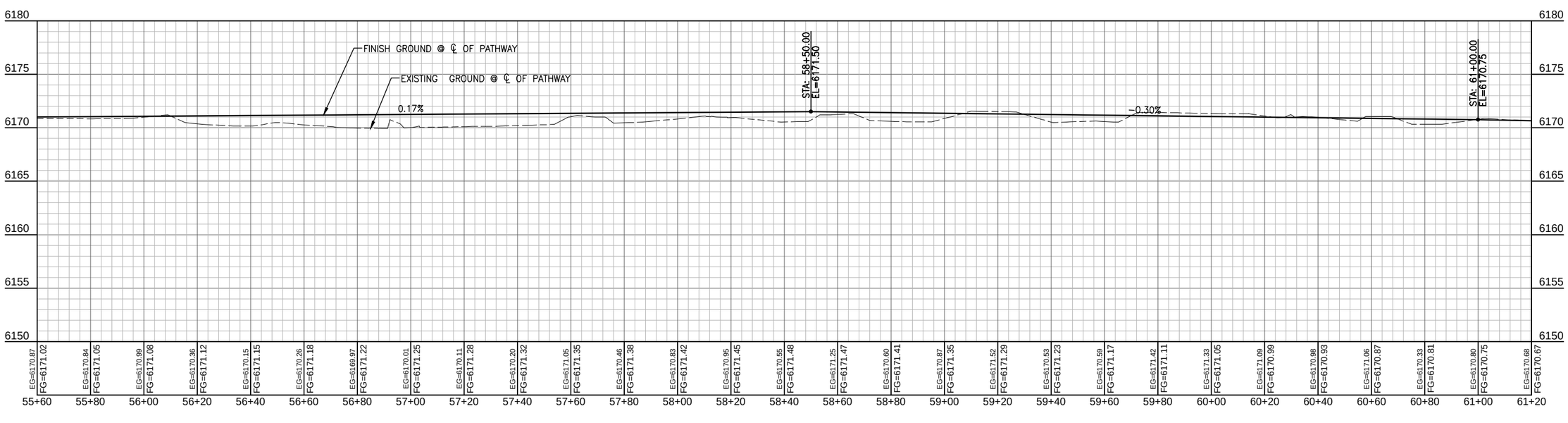

PATH 22

NELSON ENGINEERING
P.O. BOX 1599, JACKSON WYOMING
(307) 733-2087

TETON COUNTY

DRAWING TITLE
PATHWAY ALIGNMENT
PLAN & PROFILE
STA. 55+60 - 61+20

REVISIONS

DRAWING NO 3.11
JOB NO 10-124-03
DATE 1/07/2015

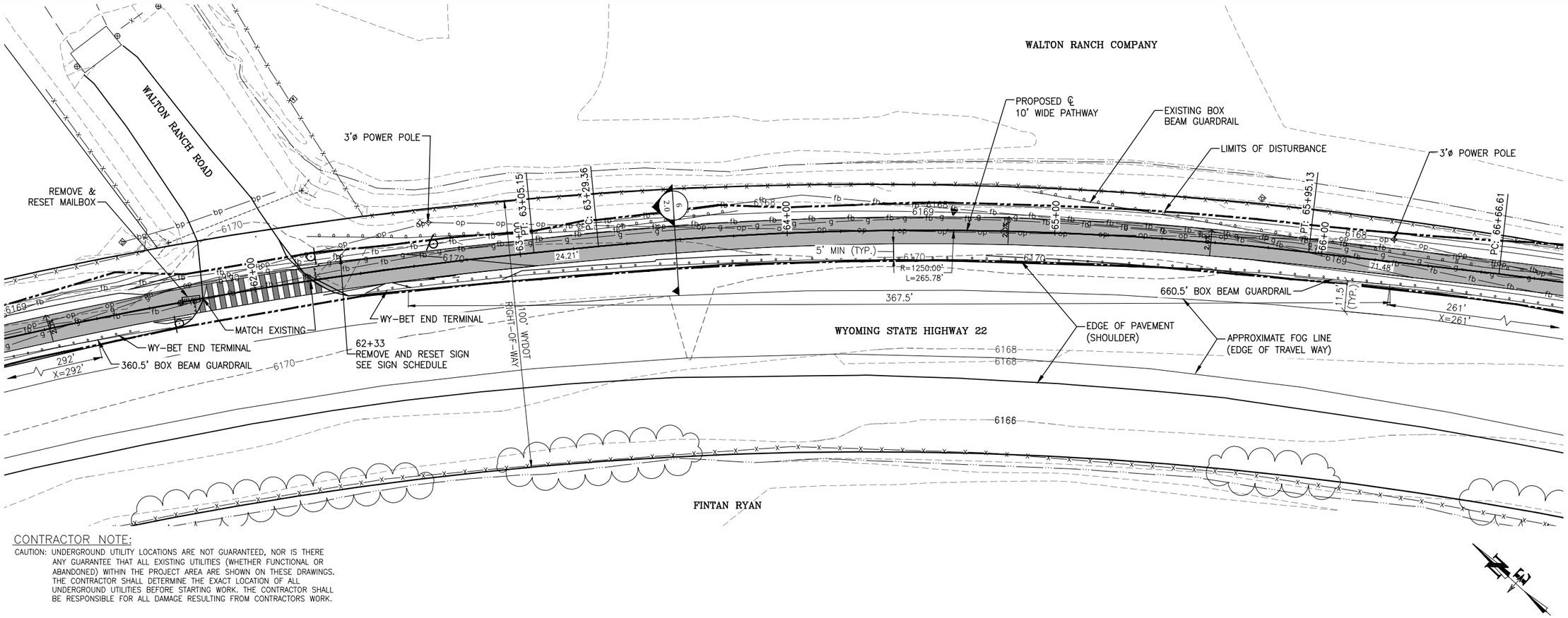

CONTRACTOR NOTE:

CAUTION: UNDERGROUND UTILITY LOCATIONS ARE NOT GUARANTEED, NOR IS THERE ANY GUARANTEE THAT ALL EXISTING UTILITIES (WHETHER FUNCTIONAL OR ABANDONED) WITHIN THE PROJECT AREA ARE SHOWN ON THESE DRAWINGS. THE CONTRACTOR SHALL DETERMINE THE EXACT LOCATION OF ALL UNDERGROUND UTILITIES BEFORE STARTING WORK. THE CONTRACTOR SHALL BE RESPONSIBLE FOR ALL DAMAGE RESULTING FROM CONTRACTORS WORK.

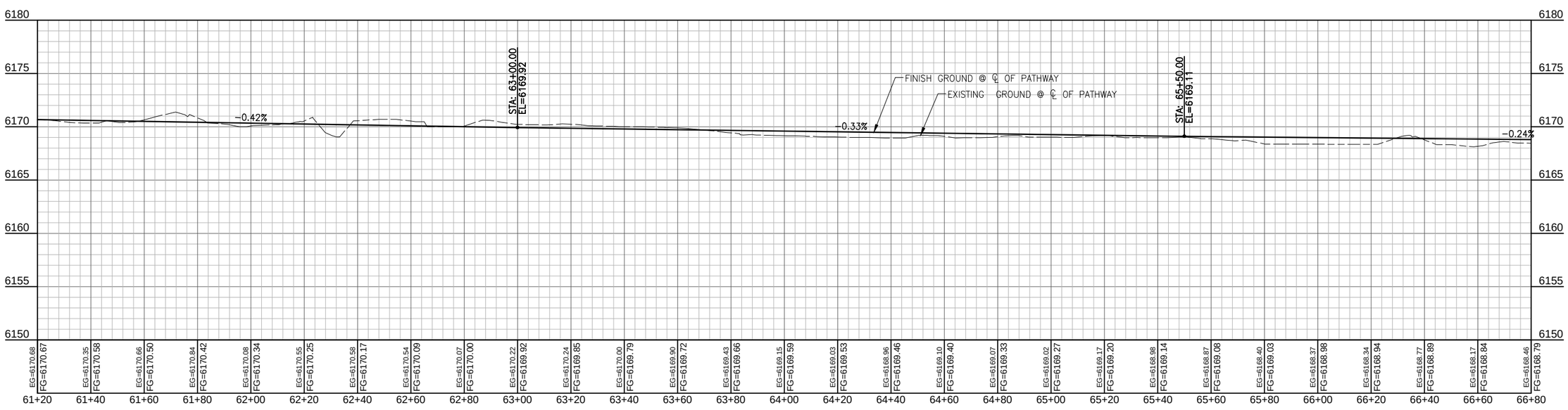

NELSON ENGINEERING
P.O. BOX 1599, JACKSON WYOMING
(307) 733-2087

DRAWING TITLE
PATHWAY ALIGNMENT
PLAN & PROFILE
STA. 61+20 - 66+80

REVISIONS

DRAWING NO 3.12
JOB NO 10-124-03
DATE 1/07/2015

S:\Proj2010\124-07 Pathway Middle Segment\Drawings\Layouts\C177-PLAN-PROF-MIDDLE PATHWAY DESIGN CL.dwg <STA. 61+20 - 66+80> - Jan 07 2015 01:30:14 pm PLOTTED BY kerichner

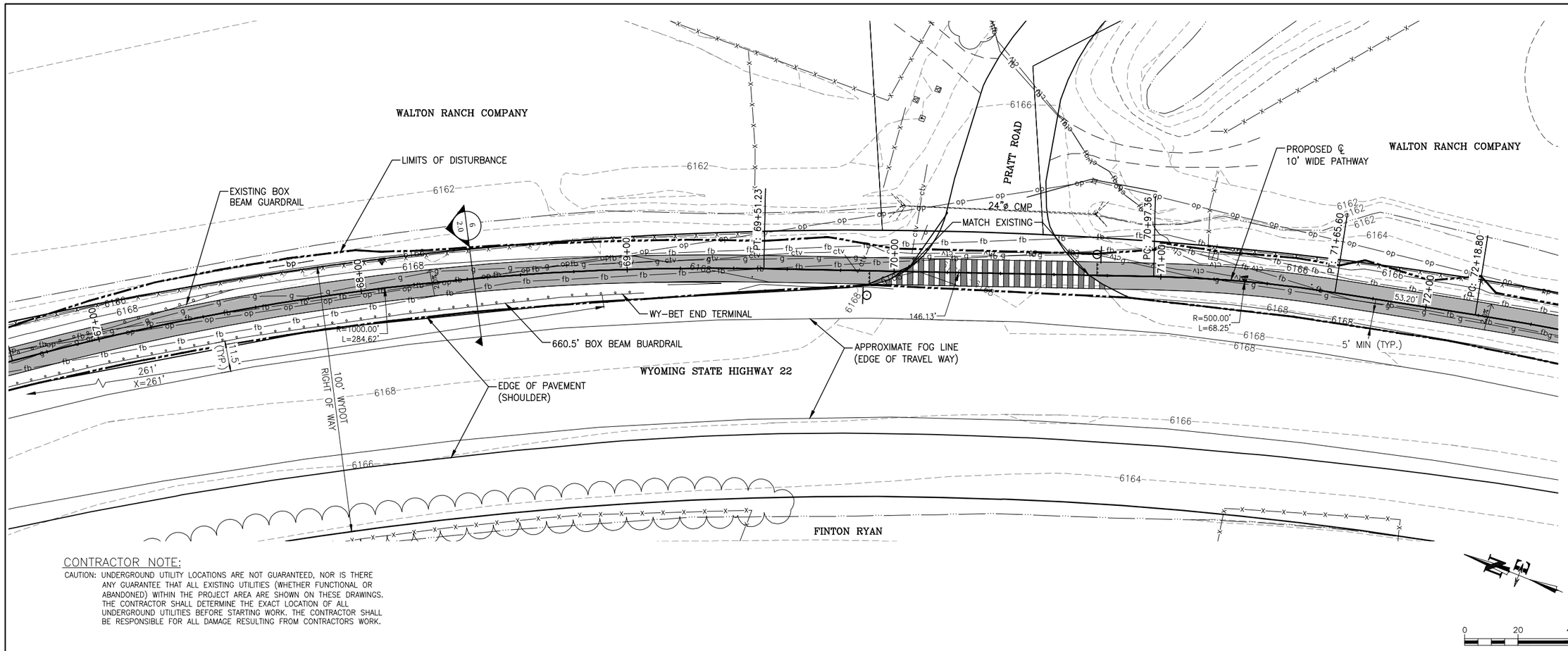

CONTRACTOR NOTE:

CAUTION: UNDERGROUND UTILITY LOCATIONS ARE NOT GUARANTEED, NOR IS THERE ANY GUARANTEE THAT ALL EXISTING UTILITIES (WHETHER FUNCTIONAL OR ABANDONED) WITHIN THE PROJECT AREA ARE SHOWN ON THESE DRAWINGS. THE CONTRACTOR SHALL DETERMINE THE EXACT LOCATION OF ALL UNDERGROUND UTILITIES BEFORE STARTING WORK. THE CONTRACTOR SHALL BE RESPONSIBLE FOR ALL DAMAGE RESULTING FROM CONTRACTORS WORK.

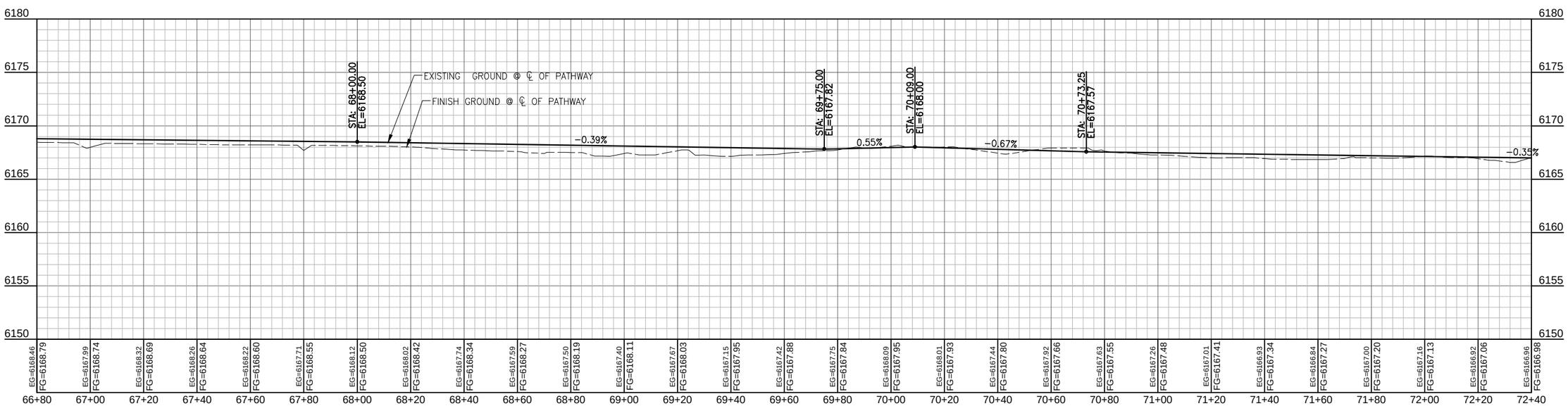

JACKSON HOLE COMMUNITY PATHWAYS

PATH 22

NELSON ENGINEERING
P.O. BOX 1599, JACKSON WYOMING
(307) 733-2087

TETON COUNTY WYOMING

TOWN OF JACKSON WYOMING

DRAWING TITLE
PATHWAY ALIGNMENT
PLAN & PROFILE
STA. 66+80 - 72+40

REVISIONS

DRAWING NO 3.13
JOB NO 10-124-03
DATE 1/07/2015

S:\Proj2010\124-07 (Path22 Middle Segment)\Drawings\Layouts\C178-PLAN-PROF-MIDDLE PATHWAY DESIGN CL.dwg <PAPSTA 66+80 - 72+40> - Jan 07 2015 01:30:01 pm PLOTTED BY: karichner

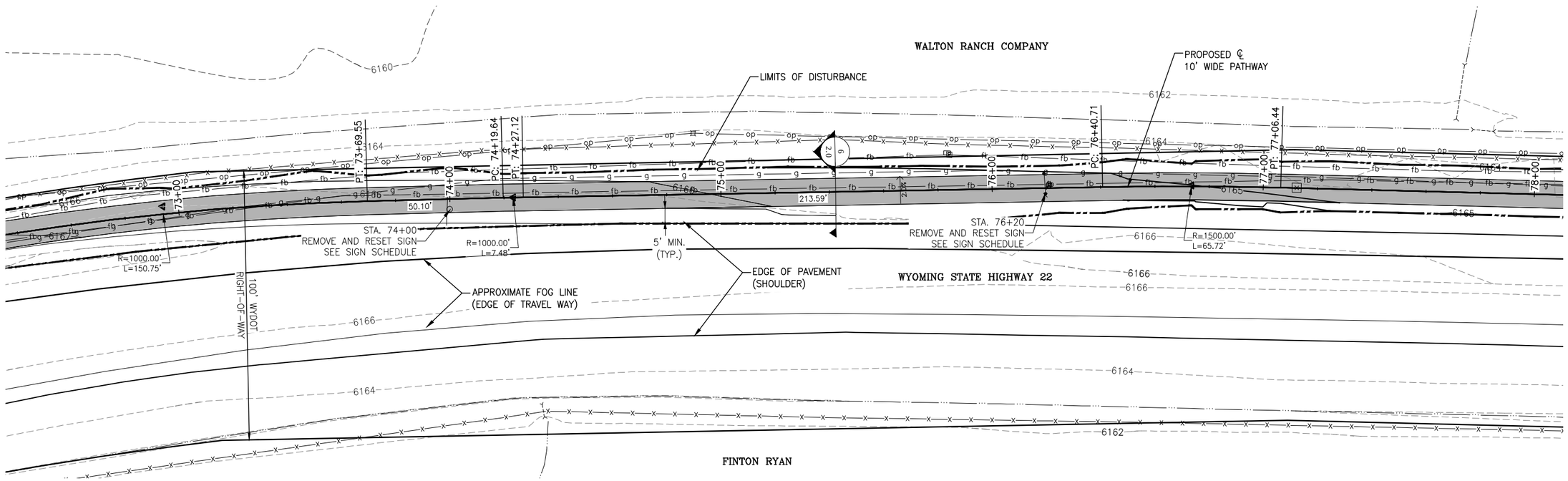

CONTRACTOR NOTE:

CAUTION: UNDERGROUND UTILITY LOCATIONS ARE NOT GUARANTEED, NOR IS THERE ANY GUARANTEE THAT ALL EXISTING UTILITIES (WHETHER FUNCTIONAL OR ABANDONED) WITHIN THE PROJECT AREA ARE SHOWN ON THESE DRAWINGS. THE CONTRACTOR SHALL DETERMINE THE EXACT LOCATION OF ALL UNDERGROUND UTILITIES BEFORE STARTING WORK. THE CONTRACTOR SHALL BE RESPONSIBLE FOR ALL DAMAGE RESULTING FROM CONTRACTORS WORK.

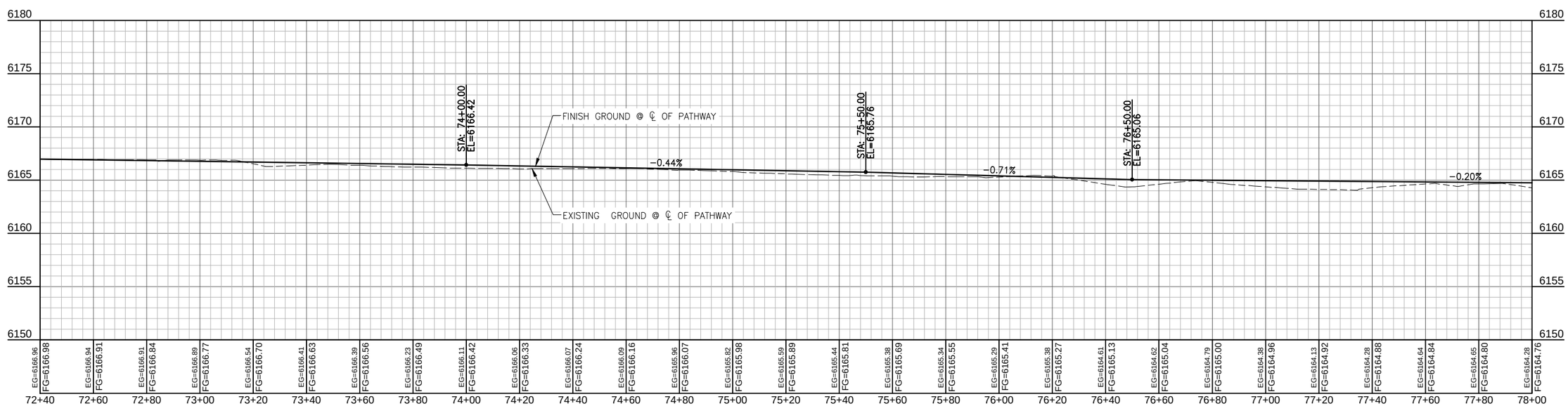

JACKSON HOLE COMMUNITY PATHWAYS

PATH 22

NELSON ENGINEERING
P.O. BOX 1599, JACKSON WYOMING
(307) 733-2087

TETON COUNTY WYOMING

TOWN OF JACKSON WYOMING

DRAWING TITLE
PATHWAY ALIGNMENT
PLAN & PROFILE
STA. 72+40 - 78+00

REVISIONS

DRAWING NO 3.14

JOB NO 10-124-03

DATE 1/07/2015

S:\Proj2000\124-07 (Path22 Middle Segment)\Drawings\Layouts\C179-PLAN-PROF-MIDDLE PATHWAY DESIGN CL.dwg (PAP72+40 - 78+00) - Jan 07 2015 01:32:10 pm PLOTTED BY: karichner

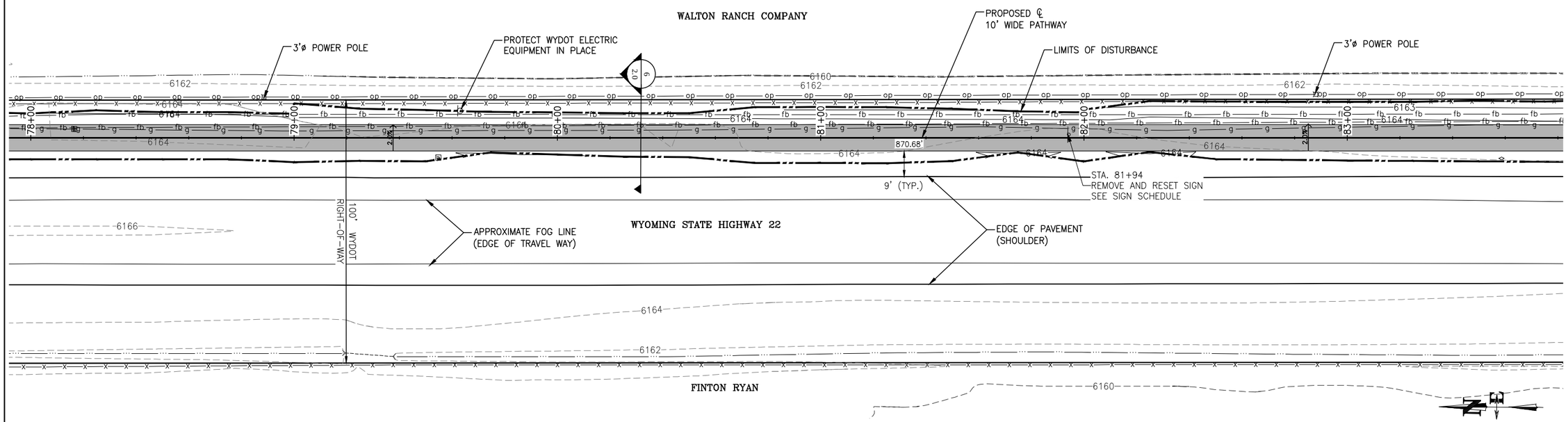

CONTRACTOR NOTE:

CAUTION: UNDERGROUND UTILITY LOCATIONS ARE NOT GUARANTEED, NOR IS THERE ANY GUARANTEE THAT ALL EXISTING UTILITIES (WHETHER FUNCTIONAL OR ABANDONED) WITHIN THE PROJECT AREA ARE SHOWN ON THESE DRAWINGS. THE CONTRACTOR SHALL DETERMINE THE EXACT LOCATION OF ALL UNDERGROUND UTILITIES BEFORE STARTING WORK. THE CONTRACTOR SHALL BE RESPONSIBLE FOR ALL DAMAGE RESULTING FROM CONTRACTORS WORK.

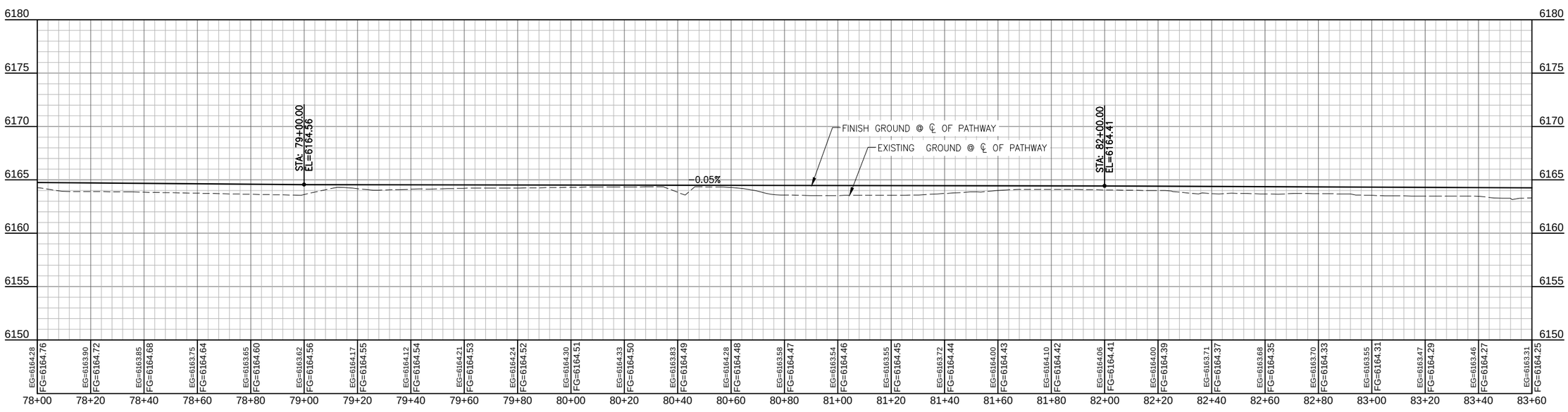

PATH 22

NELSON ENGINEERING
P.O. BOX 1599, JACKSON WYOMING
(307) 733-2087

TETON COUNTY WYOMING

DRAWING TITLE
PATHWAY ALIGNMENT
PLAN & PROFILE
STA. 78+00 - 83+60

REVISIONS

DRAWING NO 3.15
JOB NO 10-124-03
DATE 1/07/2015

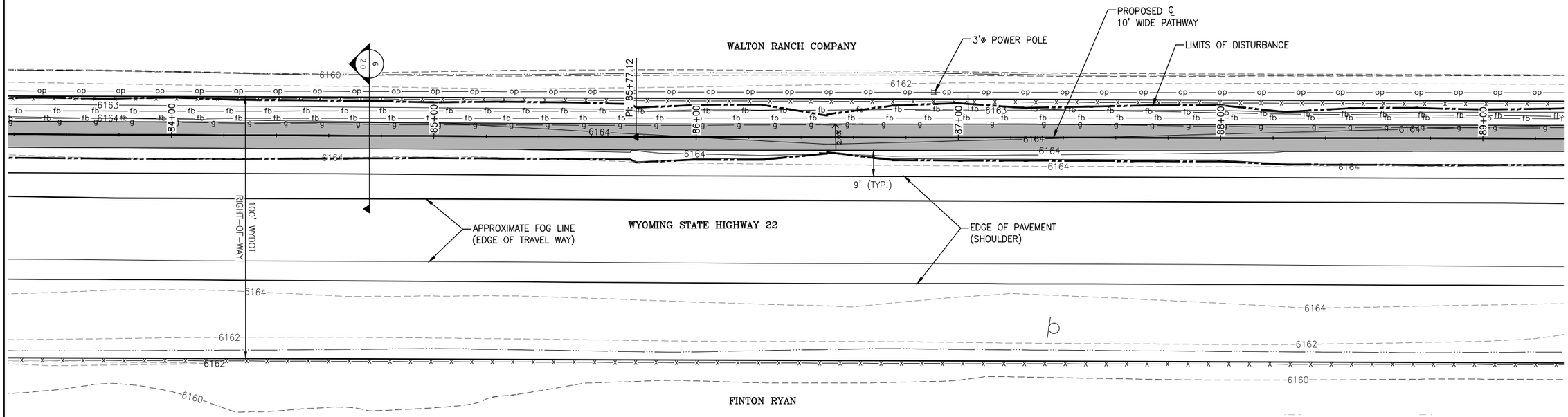

CONTRACTOR NOTE:

CAUTION: UNDERGROUND UTILITY LOCATIONS ARE NOT GUARANTEED, NOR IS THERE ANY GUARANTEE THAT ALL EXISTING UTILITIES (WHETHER FUNCTIONAL OR ABANDONED) WITHIN THE PROJECT AREA ARE SHOWN ON THESE DRAWINGS. THE CONTRACTOR SHALL DETERMINE THE EXACT LOCATION OF ALL UNDERGROUND UTILITIES BEFORE STARTING WORK. THE CONTRACTOR SHALL BE RESPONSIBLE FOR ALL DAMAGE RESULTING FROM CONTRACTORS WORK.

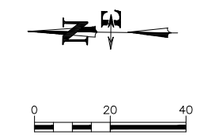

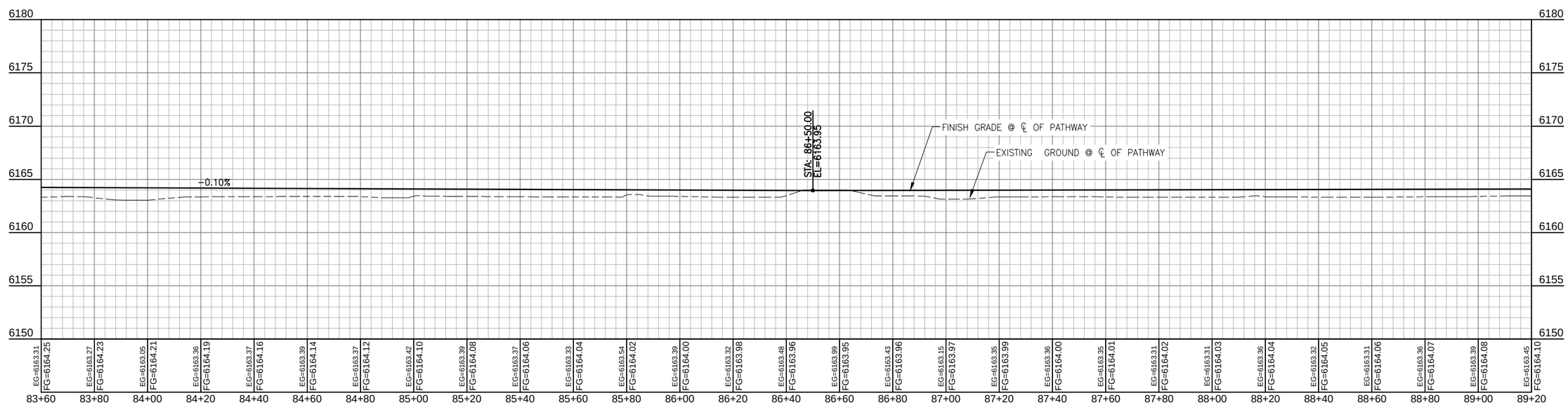

JACKSON HOLE COMMUNITY PATHWAYS

PATH 22

NELSON ENGINEERING
P.O. BOX 1599, JACKSON WYOMING
(307) 733-2087

TETON COUNTY WYOMING

TOWN OF JACKSON WYOMING

DRAWING TITLE
PATHWAY ALIGNMENT
PLAN & PROFILE
STA. 83+60 TO 89+20

REVISIONS

DRAWING NO 3.16

JOB NO 10-124-03

DATE 1/07/2015

S:\Proj2010\124-07 (Path22 Middle Segment)\Drawings\Layouts\C181-PLAN-PROF-MIDDLE PATHWAY DESIGN CL.dwg (P&P83+60 TO 89+20) - Jan 07 2015 01:34:02 pm PLOTTED BY: karichner

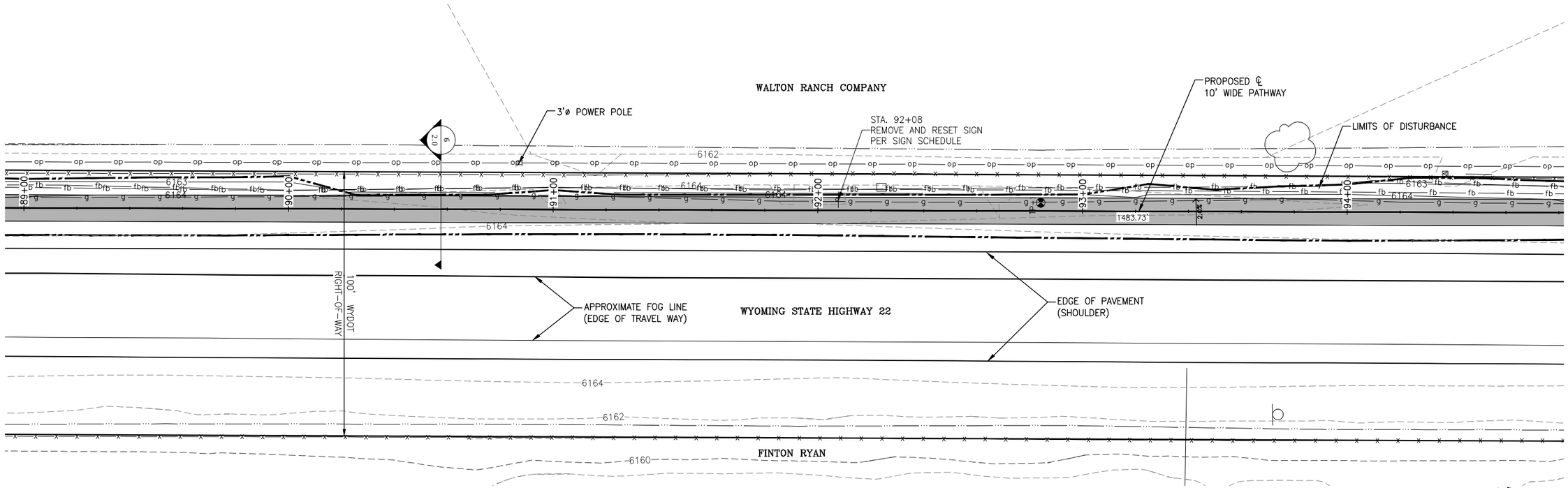

CONTRACTOR NOTE:

CAUTION: UNDERGROUND UTILITY LOCATIONS ARE NOT GUARANTEED, NOR IS THERE ANY GUARANTEE THAT ALL EXISTING UTILITIES (WHETHER FUNCTIONAL OR ABANDONED) WITHIN THE PROJECT AREA ARE SHOWN ON THESE DRAWINGS. THE CONTRACTOR SHALL DETERMINE THE EXACT LOCATION OF ALL UNDERGROUND UTILITIES BEFORE STARTING WORK. THE CONTRACTOR SHALL BE RESPONSIBLE FOR ALL DAMAGE RESULTING FROM CONTRACTORS WORK.

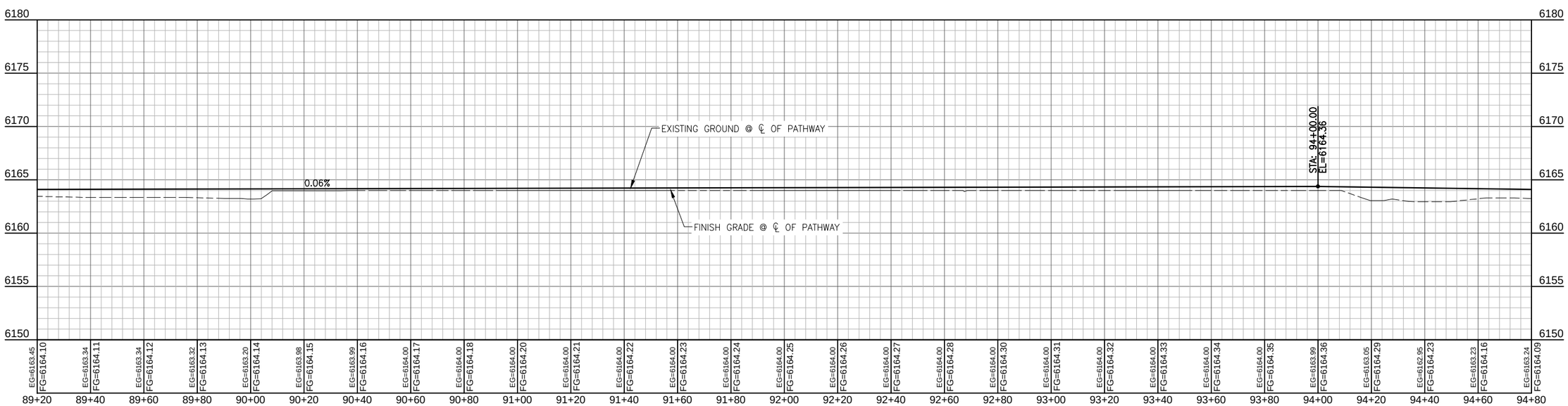

PATH 22

NELSON ENGINEERING
P.O. BOX 1599, JACKSON WYOMING
(307) 733-2087

TETON COUNTY

DRAWING TITLE
PATHWAY ALGINMENT
PLAN & PROFILE
STA. 89+20 – 94+80

REVISIONS

DRAWING NO 3.17
JOB NO 10-124-03
DATE 1/07/2015

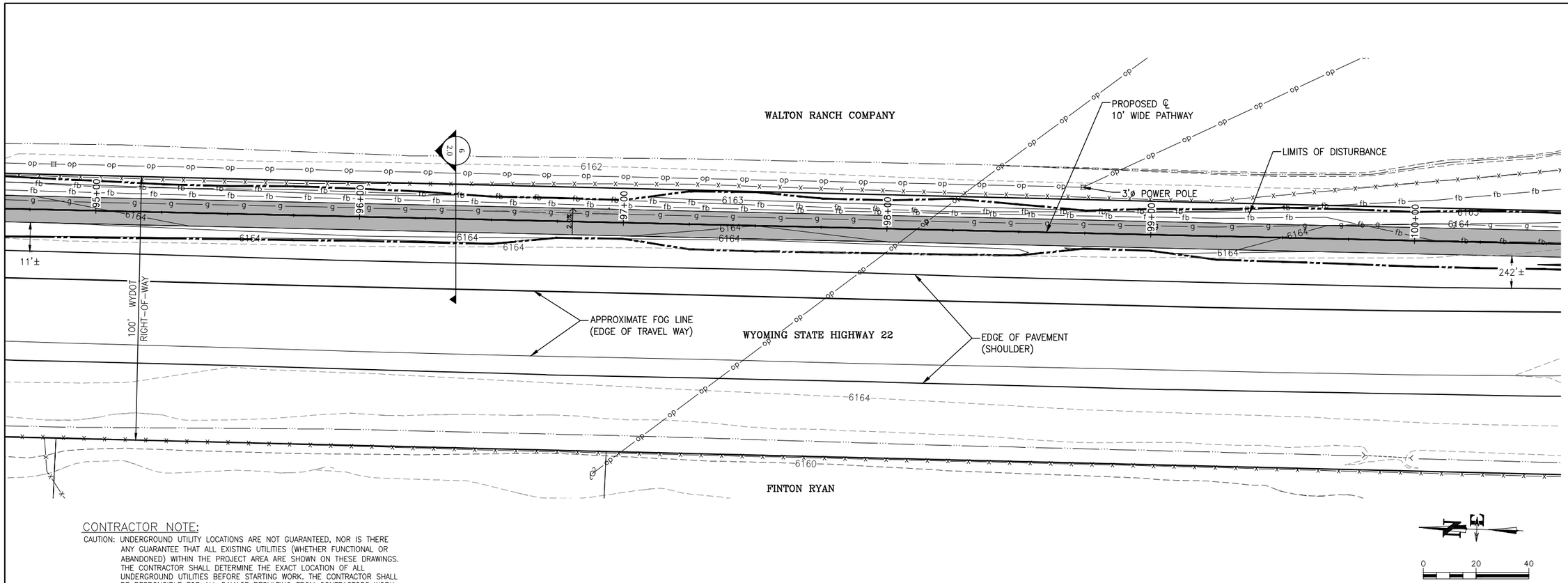

CONTRACTOR NOTE:

CAUTION: UNDERGROUND UTILITY LOCATIONS ARE NOT GUARANTEED, NOR IS THERE ANY GUARANTEE THAT ALL EXISTING UTILITIES (WHETHER FUNCTIONAL OR ABANDONED) WITHIN THE PROJECT AREA ARE SHOWN ON THESE DRAWINGS. THE CONTRACTOR SHALL DETERMINE THE EXACT LOCATION OF ALL UNDERGROUND UTILITIES BEFORE STARTING WORK. THE CONTRACTOR SHALL BE RESPONSIBLE FOR ALL DAMAGE RESULTING FROM CONTRACTORS WORK.

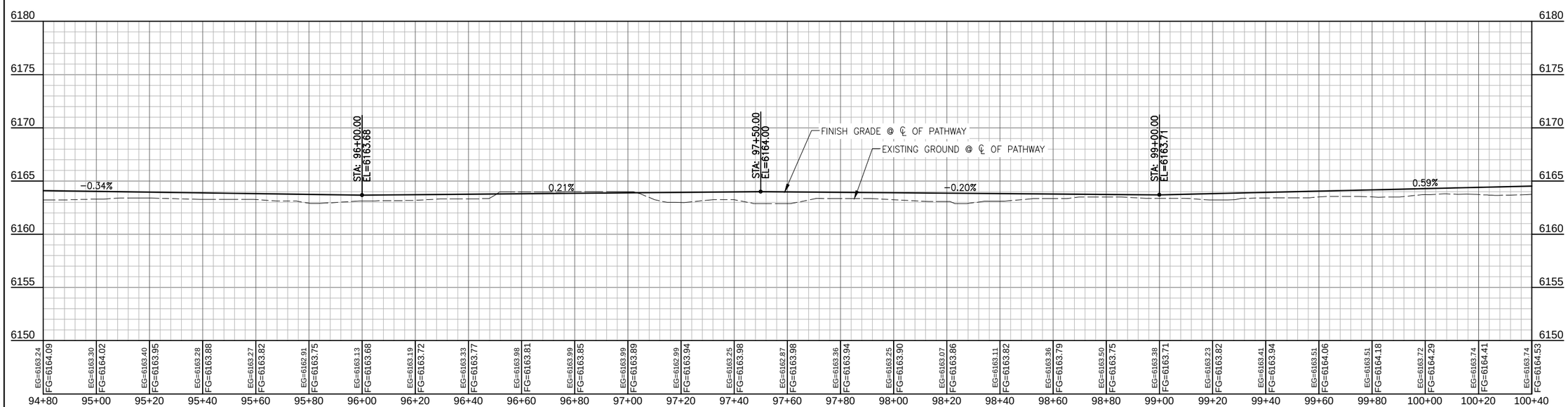

JACKSON HOLE COMMUNITY PATHWAYS

PATH 22

NELSON ENGINEERING
P.O. BOX 1599, JACKSON WYOMING
(307) 733-2087

TETON COUNTY WYOMING

TOWN OF JACKSON WYOMING

DRAWING TITLE
PATHWAY ALIGNMENT
PLAN & PROFILE
STA. 94+80 - 100+40

REVISIONS

DRAWING NO 3.18

JOB NO 10-124-03

DATE 1/07/2015

S:\Proj2010\124-07 (Path22 Middle Segment)\Drawings\Layouts\C183-PLAN-PROF-MIDDLE PATHWAY DESIGN CL.dwg (P&P 94+80 - 100+40) - Jan 07 2015 01:36:03 pm PLOTTED BY: karichner

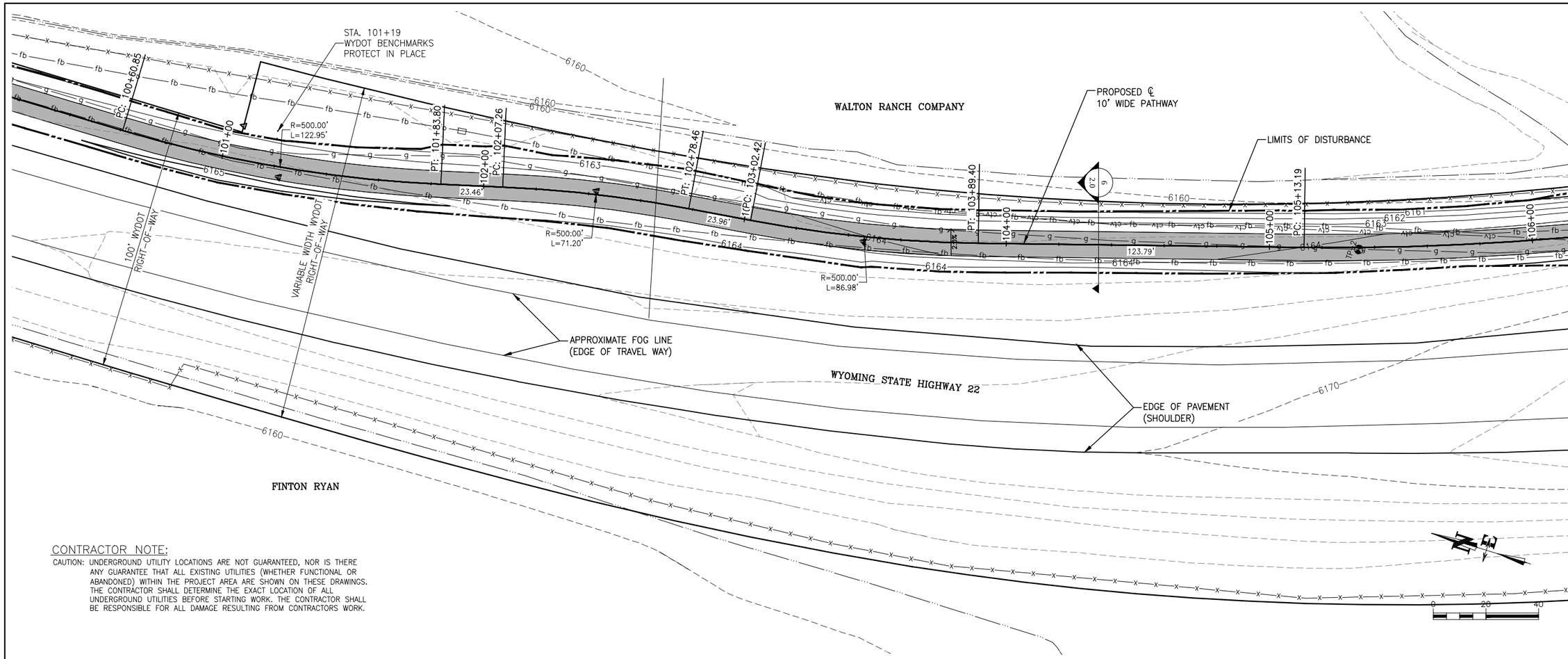

CONTRACTOR NOTE:

CAUTION: UNDERGROUND UTILITY LOCATIONS ARE NOT GUARANTEED, NOR IS THERE ANY GUARANTEE THAT ALL EXISTING UTILITIES (WHETHER FUNCTIONAL OR ABANDONED) WITHIN THE PROJECT AREA ARE SHOWN ON THESE DRAWINGS. THE CONTRACTOR SHALL DETERMINE THE EXACT LOCATION OF ALL UNDERGROUND UTILITIES BEFORE STARTING WORK. THE CONTRACTOR SHALL BE RESPONSIBLE FOR ALL DAMAGE RESULTING FROM CONTRACTORS WORK.

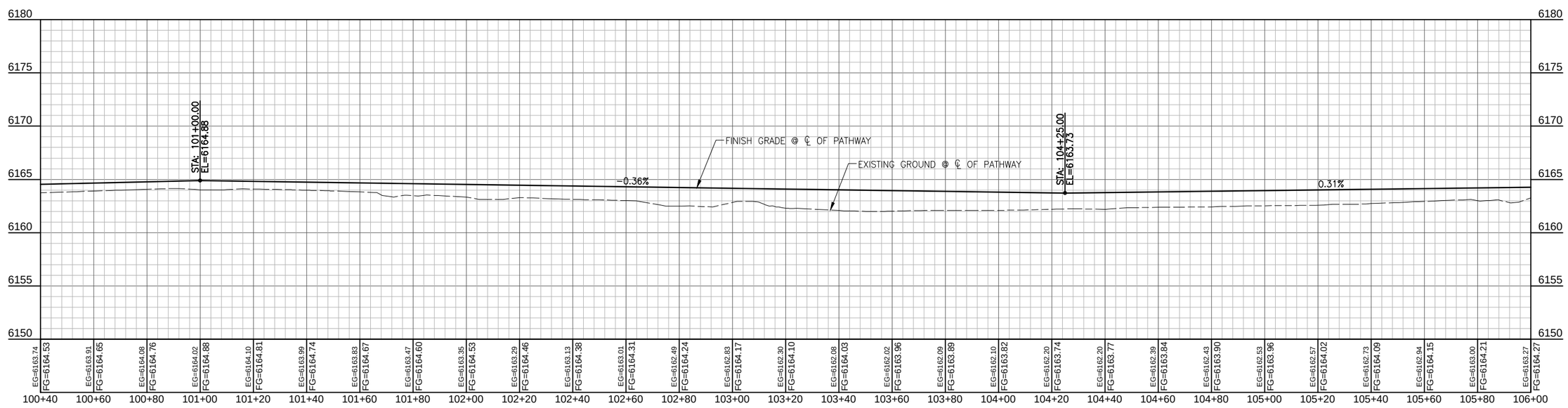

NELSON ENGINEERING
P.O. BOX 1599, JACKSON WYOMING
(307) 733-2087

DRAWING TITLE
PATHWAY ALIGNMENT
PLAN & PROFILE
STA. 100+40 - 106+00

REVISIONS

DRAWING NO 3.19
JOB NO 10-124-03
DATE 1/07/2015

S:\Proj2010\124-07 (Pathway) Middle Segment\Drawings\Layouts\C184-PLAN-PROF-MIDDLE PATHWAY DESIGN CL.dwg (PM210448 - 106400) - Jan 07 2015 03:36:56 pm PLOTTED BY: kurichner

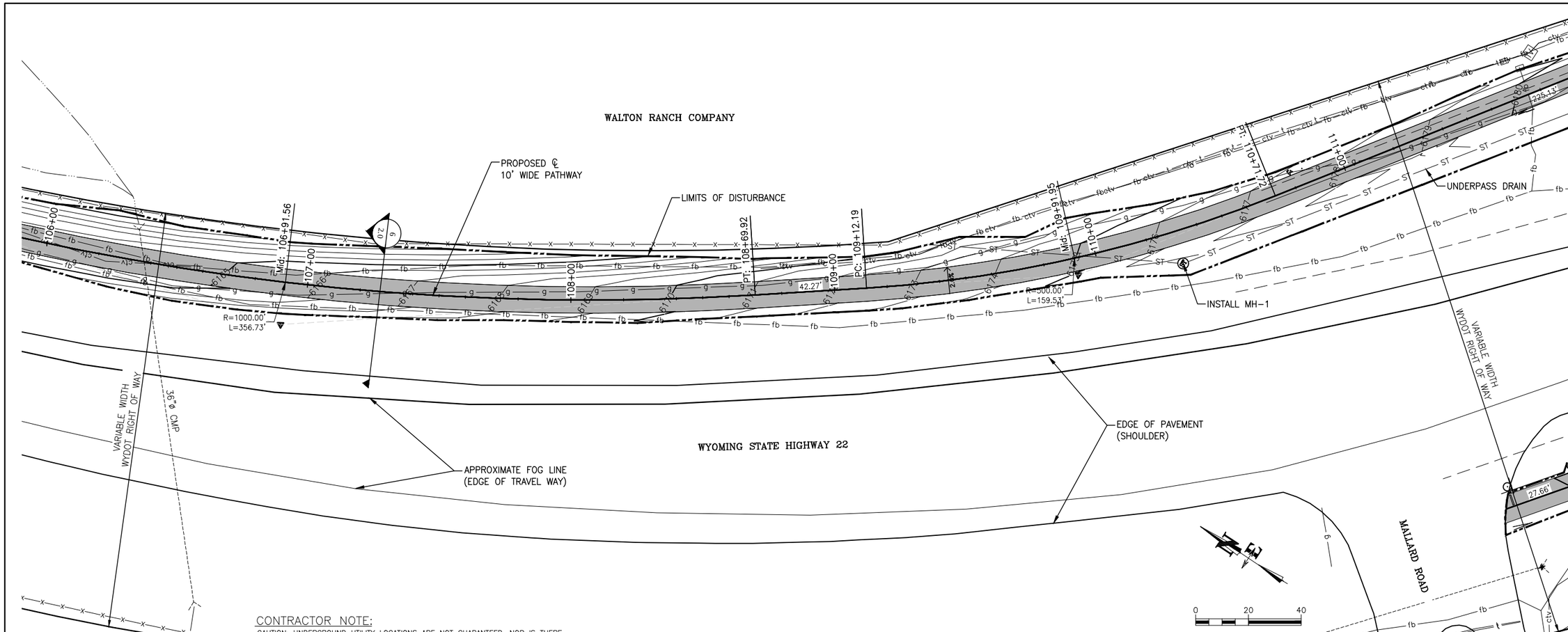

CONTRACTOR NOTE:

CAUTION: UNDERGROUND UTILITY LOCATIONS ARE NOT GUARANTEED, NOR IS THERE ANY GUARANTEE THAT ALL EXISTING UTILITIES (WHETHER FUNCTIONAL OR ABANDONED) WITHIN THE PROJECT AREA ARE SHOWN ON THESE DRAWINGS. THE CONTRACTOR SHALL DETERMINE THE EXACT LOCATION OF ALL UNDERGROUND UTILITIES BEFORE STARTING WORK. THE CONTRACTOR SHALL BE RESPONSIBLE FOR ALL DAMAGE RESULTING FROM CONTRACTORS WORK.

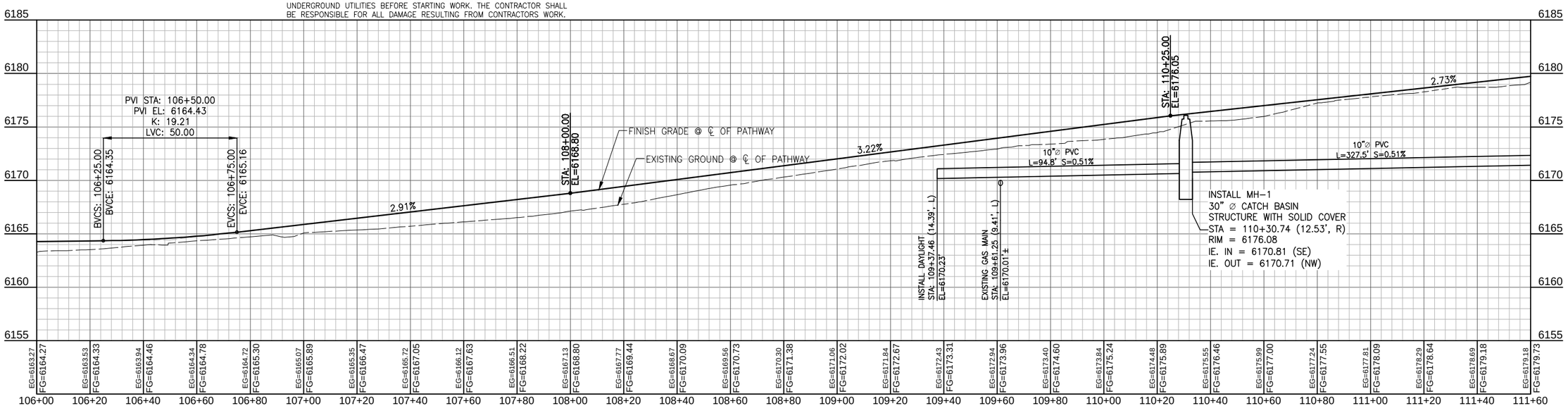

JACKSON HOLE COMMUNITY PATHWAYS

PATH 22

NELSON ENGINEERING
P.O. BOX 1599, JACKSON WYOMING
(307) 733-2087

TETON COUNTY WYOMING

TOWN OF JACKSON WYOMING

DRAWING TITLE
PATHWAY ALIGNMENT
PLAN & PROFILE
STA. 106+00 - 111+60

REVISIONS

DRAWING NO 3.20
JOB NO 10-124-03
DATE 1/07/2015

S:\Proj2010\124-07 (Path22 Middle Segment)\Drawings\Layouts\C185-PLAN-PROF-MIDDLE PATHWAY DESIGN CL.dwg <P&P106+00 - 111+60> - Jan 07 2015 01:37:53 pm PLOTTED BY: karichner

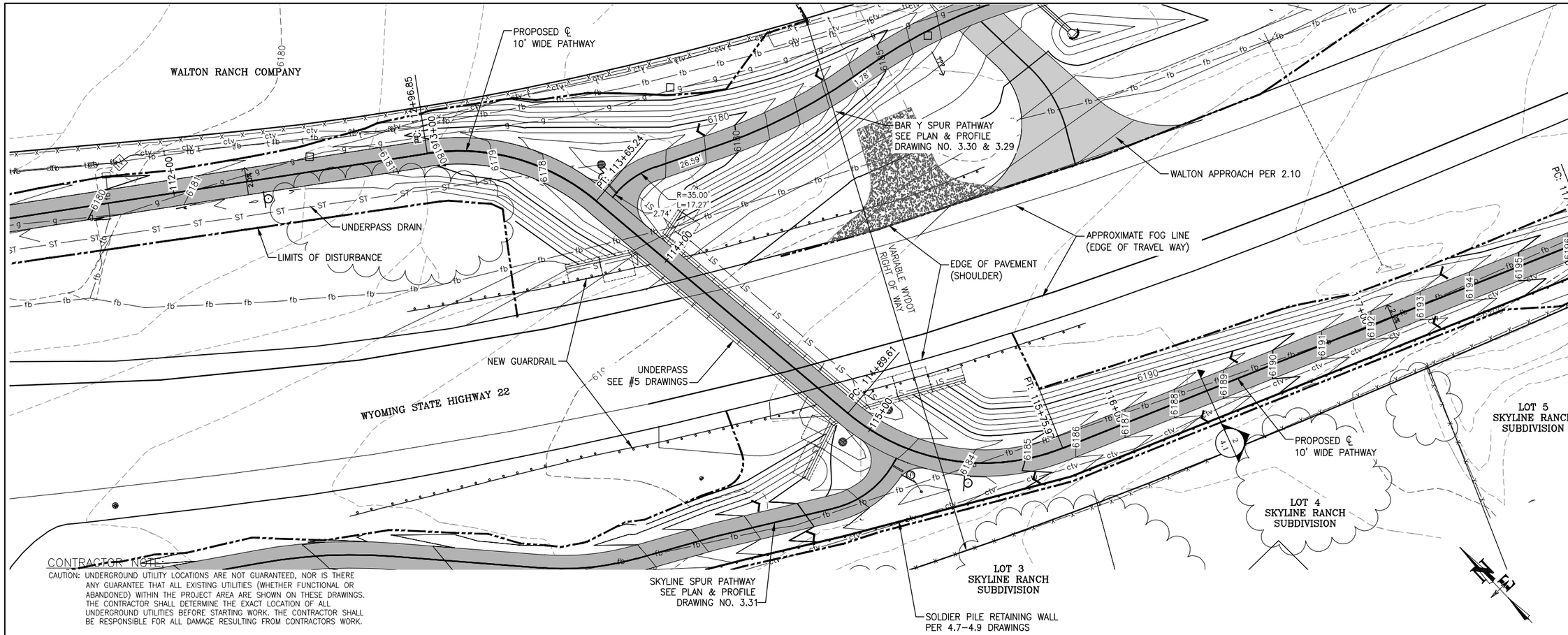

CONTRACTOR NOTE:

CAUTION: UNDERGROUND UTILITY LOCATIONS ARE NOT GUARANTEED, NOR IS THERE ANY GUARANTEE THAT ALL EXISTING UTILITIES (WHETHER FUNCTIONAL OR ABANDONED) WITHIN THE PROJECT AREA ARE SHOWN ON THESE DRAWINGS. THE CONTRACTOR SHALL DETERMINE THE EXACT LOCATION OF ALL UNDERGROUND UTILITIES BEFORE STARTING WORK. THE CONTRACTOR SHALL BE RESPONSIBLE FOR ALL DAMAGE RESULTING FROM CONTRACTORS WORK.

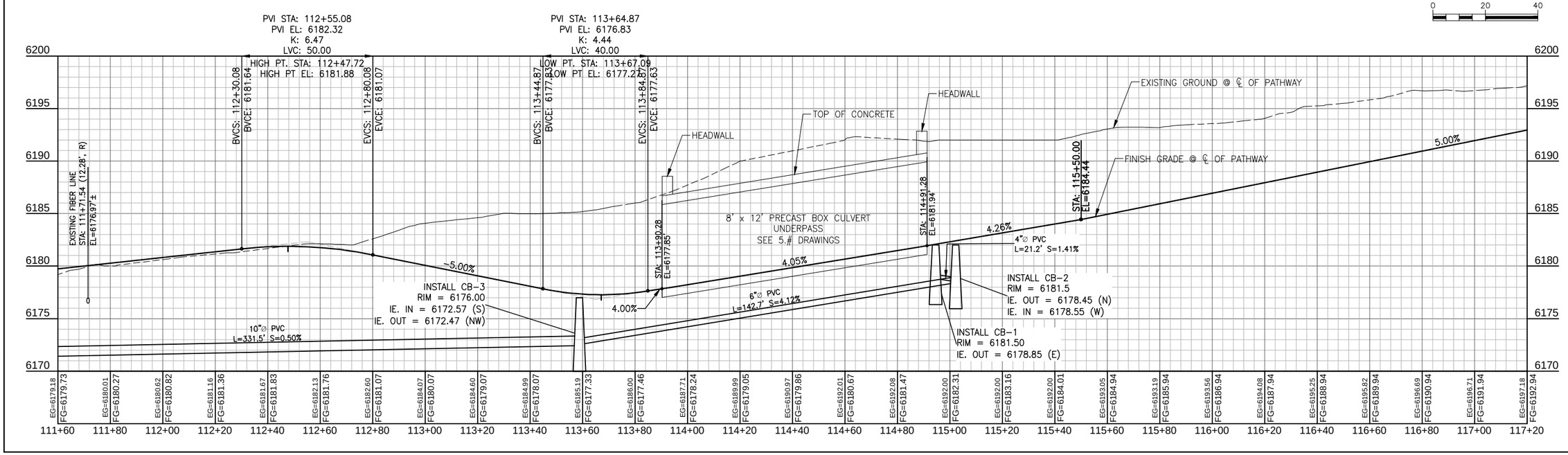

PATH 22

NELSON ENGINEERING
P.O. BOX 1599, JACKSON WYOMING
(307) 733-2087

TETON COUNTY

DRAWING TITLE
PATHWAY
PLAN & PROFILE
STA. 111+60 - 117+20

REVISIONS

DRAWING NO 3.21
JOB NO 10-124-03
DATE 1/07/2015

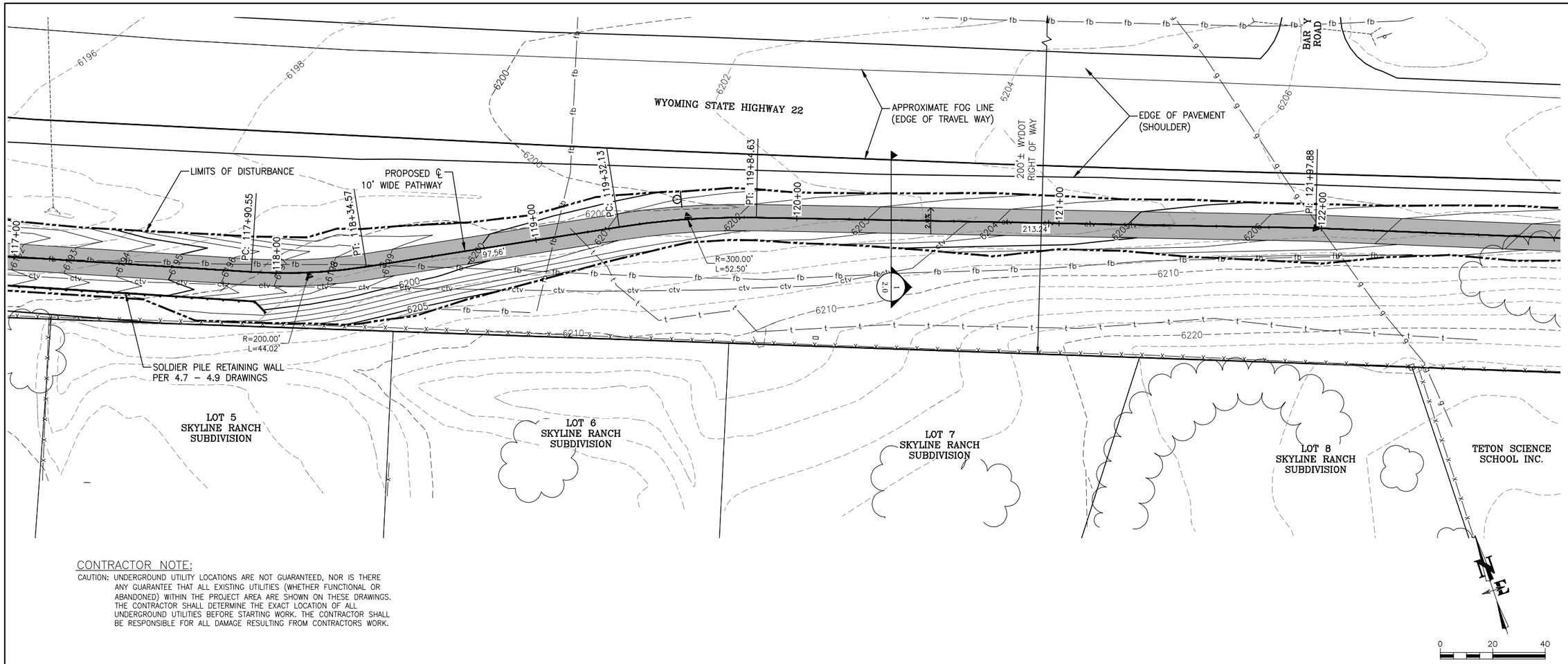

CONTRACTOR NOTE:

CAUTION: UNDERGROUND UTILITY LOCATIONS ARE NOT GUARANTEED, NOR IS THERE ANY GUARANTEE THAT ALL EXISTING UTILITIES (WHETHER FUNCTIONAL OR ABANDONED) WITHIN THE PROJECT AREA ARE SHOWN ON THESE DRAWINGS. THE CONTRACTOR SHALL DETERMINE THE EXACT LOCATION OF ALL UNDERGROUND UTILITIES BEFORE STARTING WORK. THE CONTRACTOR SHALL BE RESPONSIBLE FOR ALL DAMAGE RESULTING FROM CONTRACTORS WORK.

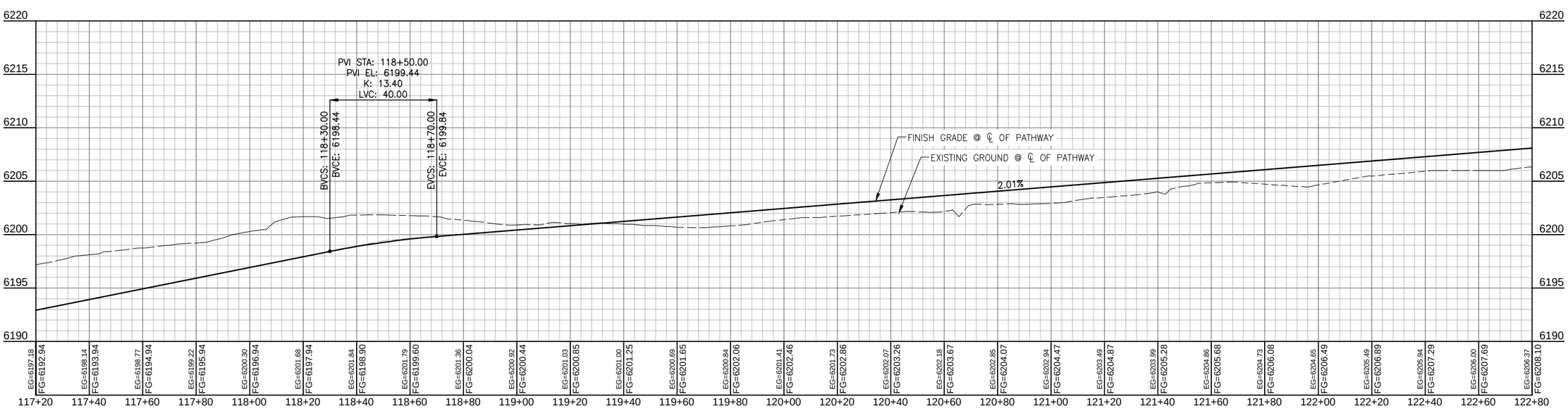

PATH 22

NELSON ENGINEERING
P.O. BOX 1599, JACKSON WYOMING
(307) 733-2087

TETON COUNTY

DRAWING TITLE
PATHWAY ALIGNMENT
PLAN & PROFILE
STA. 117+20 – 122+80

REVISIONS

DRAWING NO 3.22
JOB NO 10-124-03
DATE 1/07/2015

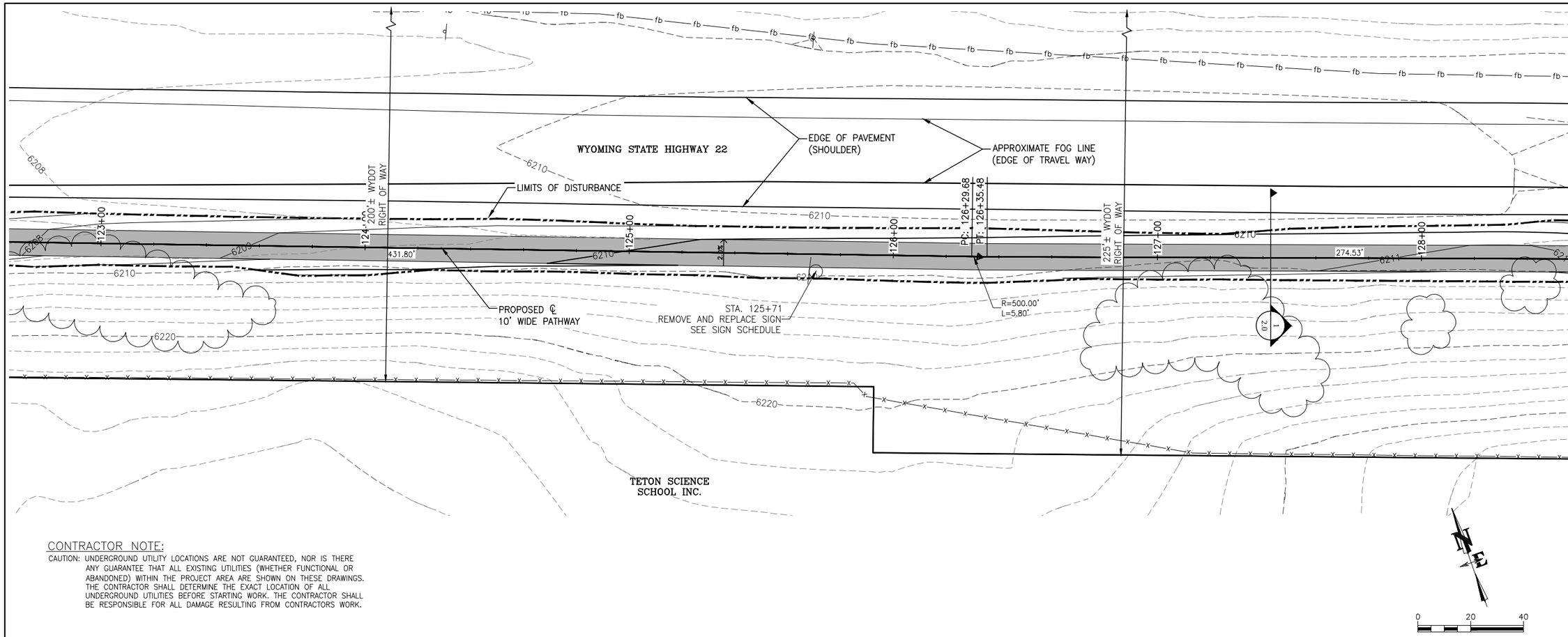

CONTRACTOR NOTE:

CAUTION: UNDERGROUND UTILITY LOCATIONS ARE NOT GUARANTEED, NOR IS THERE ANY GUARANTEE THAT ALL EXISTING UTILITIES (WHETHER FUNCTIONAL OR ABANDONED) WITHIN THE PROJECT AREA ARE SHOWN ON THESE DRAWINGS. THE CONTRACTOR SHALL DETERMINE THE EXACT LOCATION OF ALL UNDERGROUND UTILITIES BEFORE STARTING WORK. THE CONTRACTOR SHALL BE RESPONSIBLE FOR ALL DAMAGE RESULTING FROM CONTRACTORS WORK.

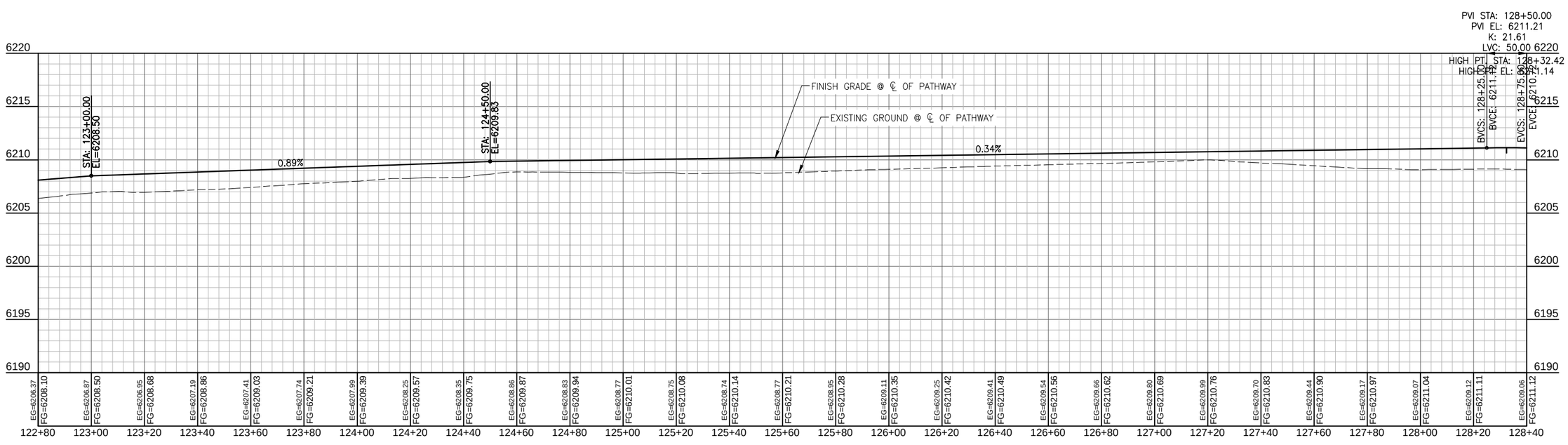

NELSON ENGINEERING
P.O. BOX 1599, JACKSON WYOMING
(307) 733-2087

PATH 22

TETON COUNTY

DRAWING TITLE
PATHWAY ALIGNMENT
PLAN & PROFILE
STA. 122+80 – 128+40

REVISIONS

DRAWING NO 3.23
JOB NO 10-124-03
DATE 1/07/2015

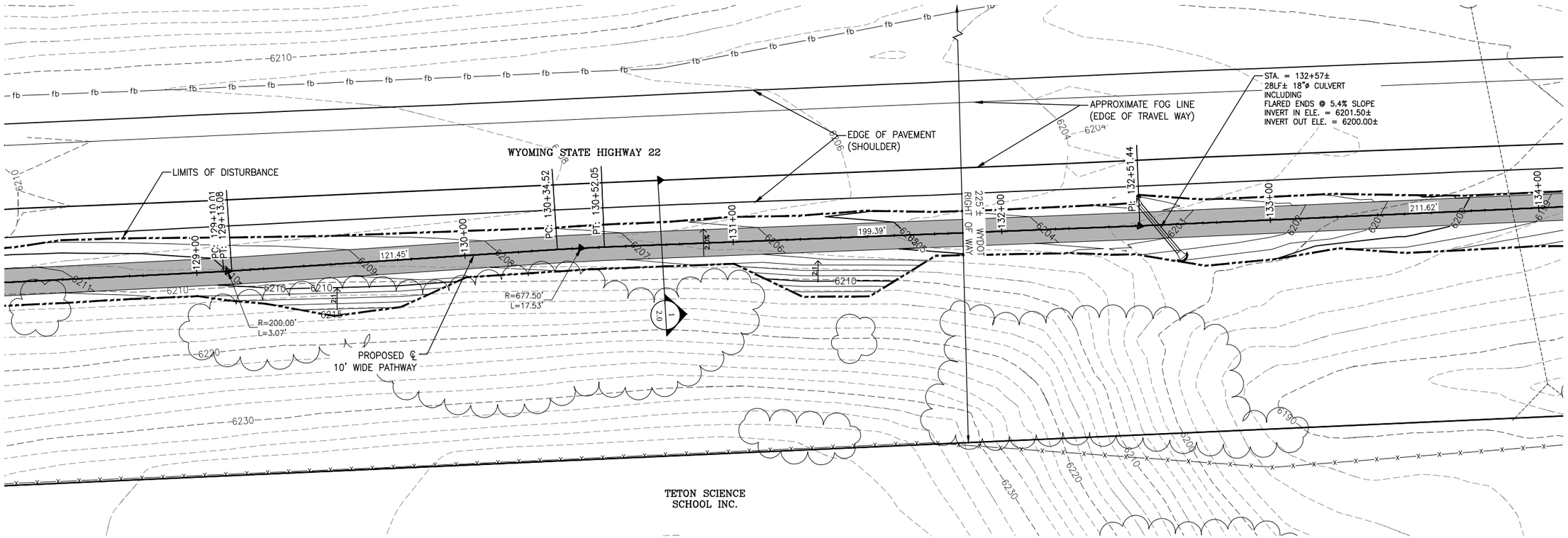

CONTRACTOR NOTE:

CAUTION: UNDERGROUND UTILITY LOCATIONS ARE NOT GUARANTEED, NOR IS THERE ANY GUARANTEE THAT ALL EXISTING UTILITIES (WHETHER FUNCTIONAL OR ABANDONED) WITHIN THE PROJECT AREA ARE SHOWN ON THESE DRAWINGS. THE CONTRACTOR SHALL DETERMINE THE EXACT LOCATION OF ALL UNDERGROUND UTILITIES BEFORE STARTING WORK. THE CONTRACTOR SHALL BE RESPONSIBLE FOR ALL DAMAGE RESULTING FROM CONTRACTORS WORK.

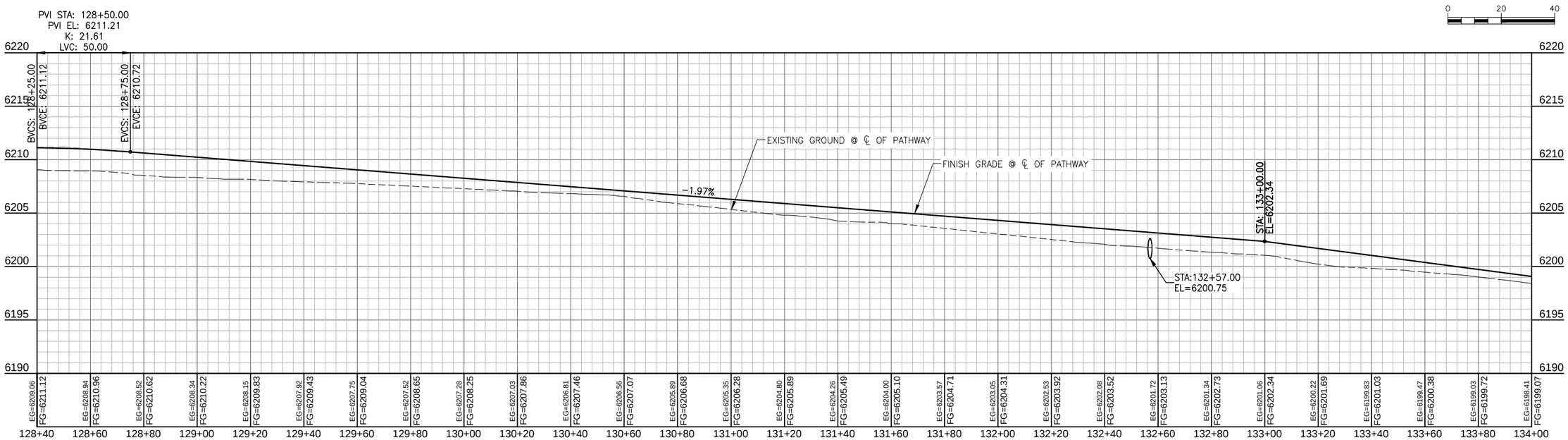

PATH 22

NELSON ENGINEERING
P.O. BOX 1599, JACKSON WYOMING
(307) 733-2087

TETON COUNTY WYOMING

DRAWING TITLE
PATHWAY ALIGNMENT
PLAN & PROFILE
STA. 128+40 – 134+00

REVISIONS

DRAWING NO 3.24
JOB NO 10-124-03
DATE 1/07/2015

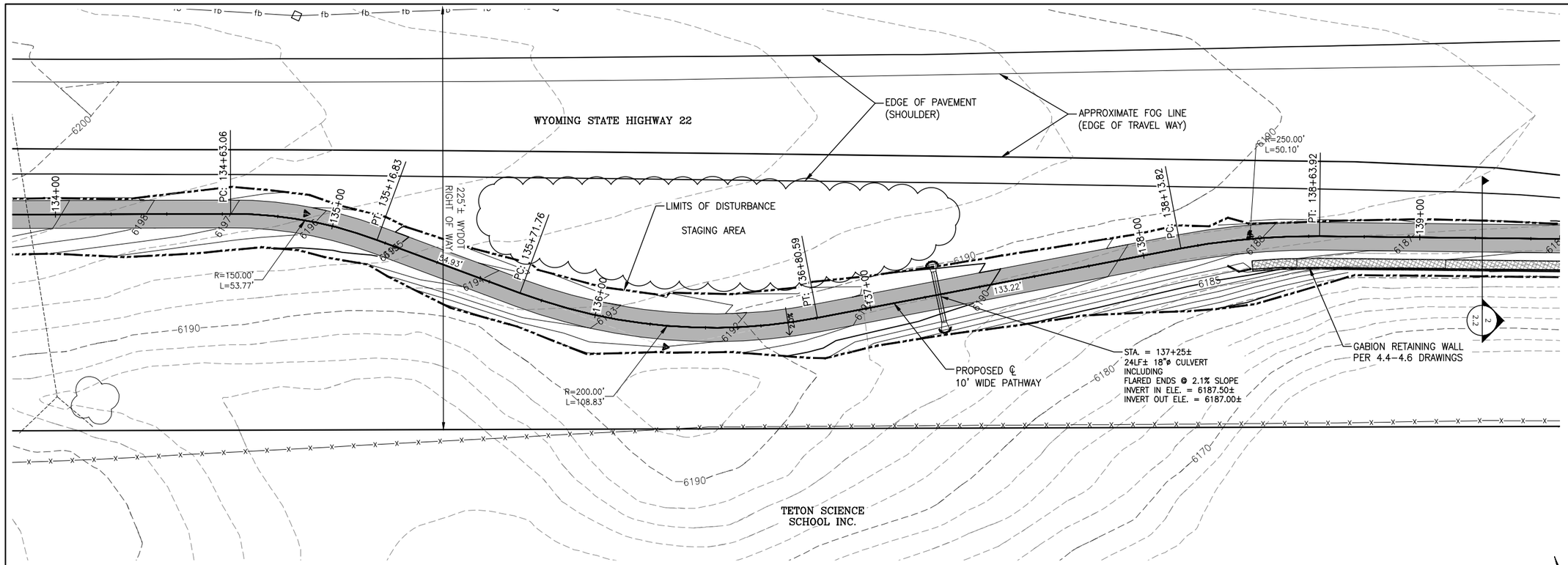

CONTRACTOR NOTE:

CAUTION: UNDERGROUND UTILITY LOCATIONS ARE NOT GUARANTEED, NOR IS THERE ANY GUARANTEE THAT ALL EXISTING UTILITIES (WHETHER FUNCTIONAL OR ABANDONED) WITHIN THE PROJECT AREA ARE SHOWN ON THESE DRAWINGS. THE CONTRACTOR SHALL DETERMINE THE EXACT LOCATION OF ALL UNDERGROUND UTILITIES BEFORE STARTING WORK. THE CONTRACTOR SHALL BE RESPONSIBLE FOR ALL DAMAGE RESULTING FROM CONTRACTORS WORK.

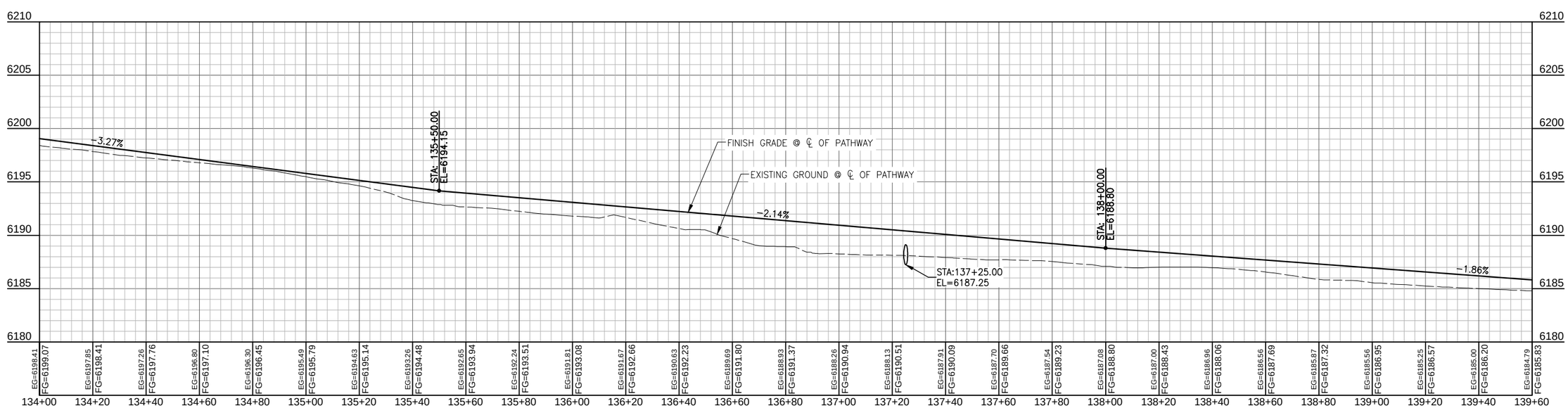

JACKSON HOLE COMMUNITY PATHWAYS

PATH 22

NELSON ENGINEERING
P.O. BOX 1599, JACKSON WYOMING
(307) 733-2087

TETON COUNTY WYOMING

TOWN OF JACKSON WYOMING

DRAWING TITLE
PATHWAY ALIGNMENT
PLAN & PROFILE
STA. 134+00 – 139+60

REVISIONS

DRAWING NO 3.25

JOB NO 10-124-03

DATE 1/07/2015

S:\Proj2010\124-07 Path22 Middle Segment\Drawings\Layouts\C190-PLAN-PROF-MIDDLE PATHWAY DESIGN CL.dwg (PLP134+00 - 139+60) - Jan 07 2015 01:43:48 pm PLOTTED BY: kurichner

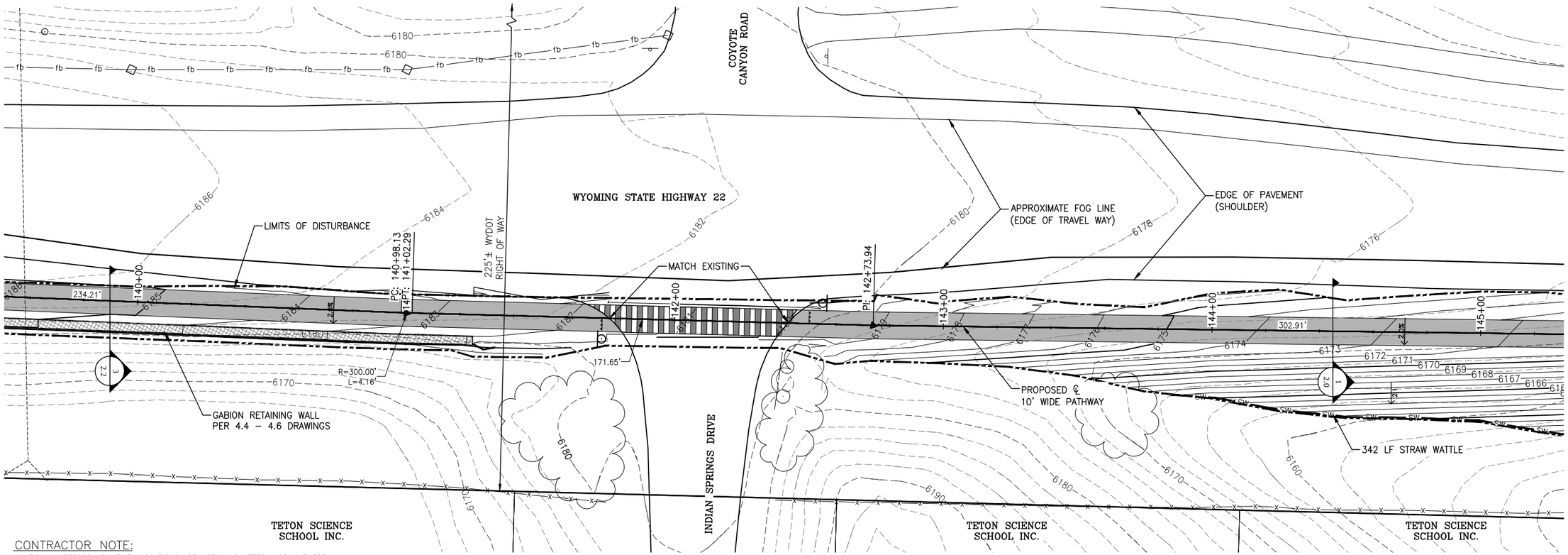

CONTRACTOR NOTE:

CAUTION: UNDERGROUND UTILITY LOCATIONS ARE NOT GUARANTEED, NOR IS THERE ANY GUARANTEE THAT ALL EXISTING UTILITIES (WHETHER FUNCTIONAL OR ABANDONED) WITHIN THE PROJECT AREA ARE SHOWN ON THESE DRAWINGS. THE CONTRACTOR SHALL DETERMINE THE EXACT LOCATION OF ALL UNDERGROUND UTILITIES BEFORE STARTING WORK. THE CONTRACTOR SHALL BE RESPONSIBLE FOR ALL DAMAGE RESULTING FROM CONTRACTORS WORK.

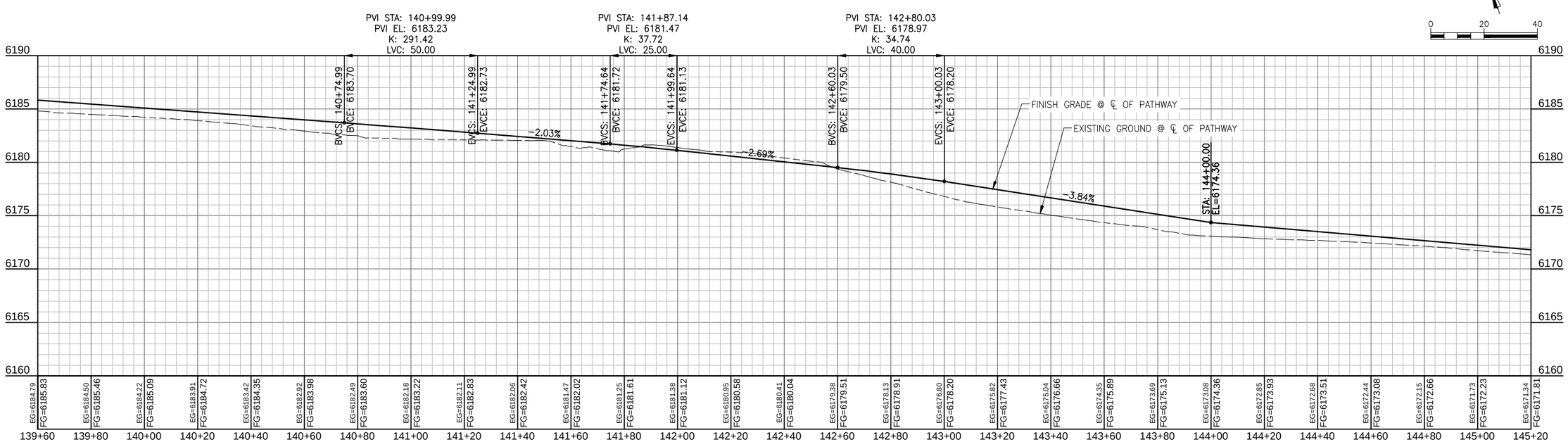

PATH 22

NELSON ENGINEERING
P.O. BOX 1599, JACKSON WYOMING
(307) 733-2087

TETON COUNTY WYOMING

DRAWING TITLE
PATHWAY ALIGNMENT
PLAN & PROFILE
STA. 139+60 – 145+20

REVISIONS

DRAWING NO 3.26
JOB NO 10-124-03
DATE 1/07/2015

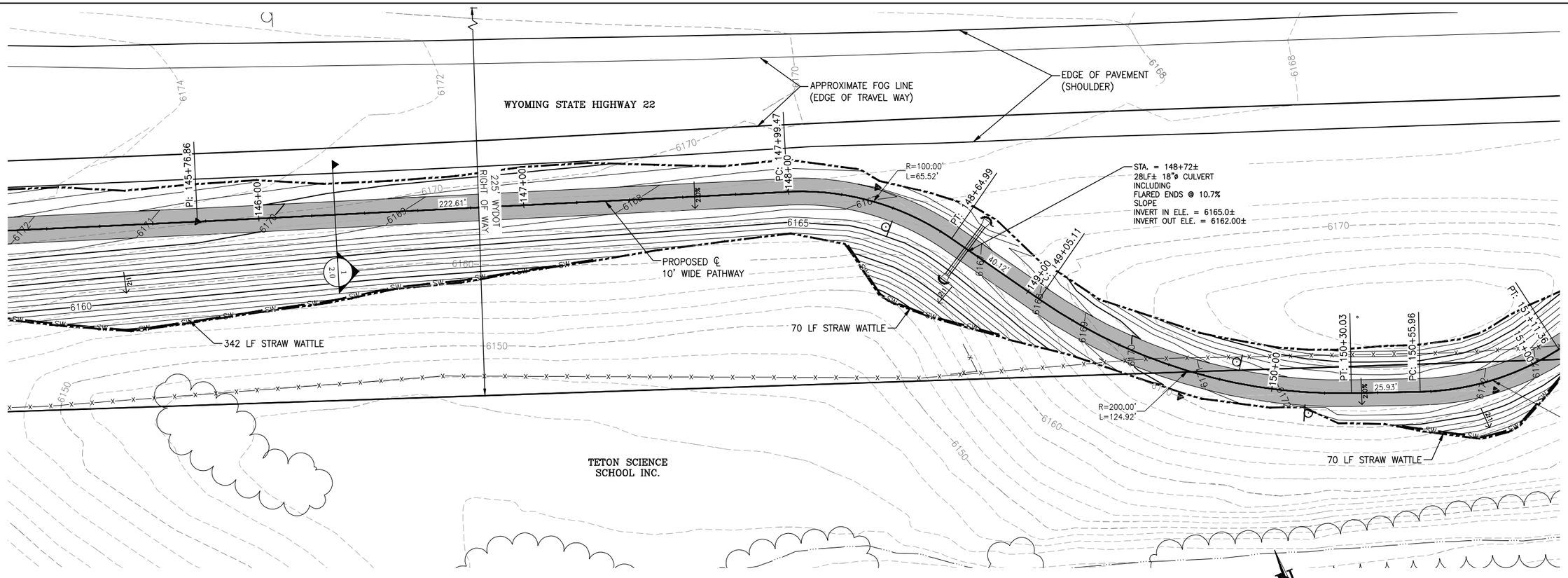

CONTRACTOR NOTE:

CAUTION: UNDERGROUND UTILITY LOCATIONS ARE NOT GUARANTEED, NOR IS THERE ANY GUARANTEE THAT ALL EXISTING UTILITIES (WHETHER FUNCTIONAL OR ABANDONED) WITHIN THE PROJECT AREA ARE SHOWN ON THESE DRAWINGS. THE CONTRACTOR SHALL DETERMINE THE EXACT LOCATION OF ALL UNDERGROUND UTILITIES BEFORE STARTING WORK. THE CONTRACTOR SHALL BE RESPONSIBLE FOR ALL DAMAGE RESULTING FROM CONTRACTORS WORK.

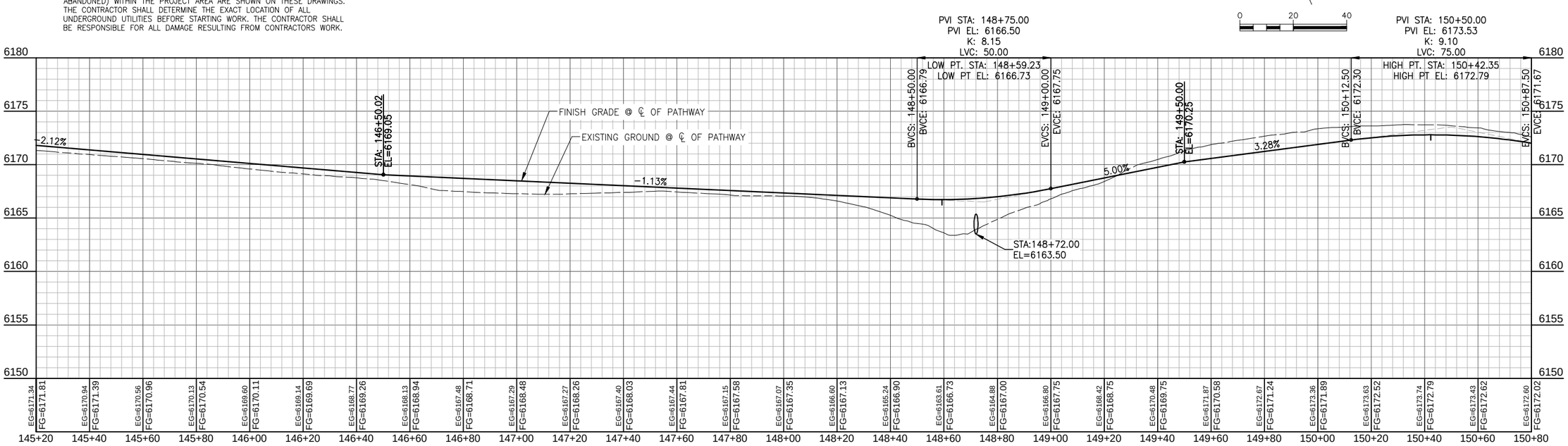

NELSON ENGINEERING
P.O. BOX 1599, JACKSON WYOMING
(307) 733-2087

DRAWING TITLE
PATHWAY ALIGNMENT
PLAN & PROFILE
STA. 145+20 – 150+80

REVISIONS

DRAWING NO 3.27
JOB NO 10-124-03
DATE 1/07/2015

S:\Proj\2010\124-07 (Pathway) Middle Segment\Drawings\Layouts\C192-PLAN-PROF-MIDDLE PATHWAY IES1024 CLdwg (PMP145+20 - 150+80) - Jan 07 2015 01:45:48 pm PLOTTED BY: karlchner

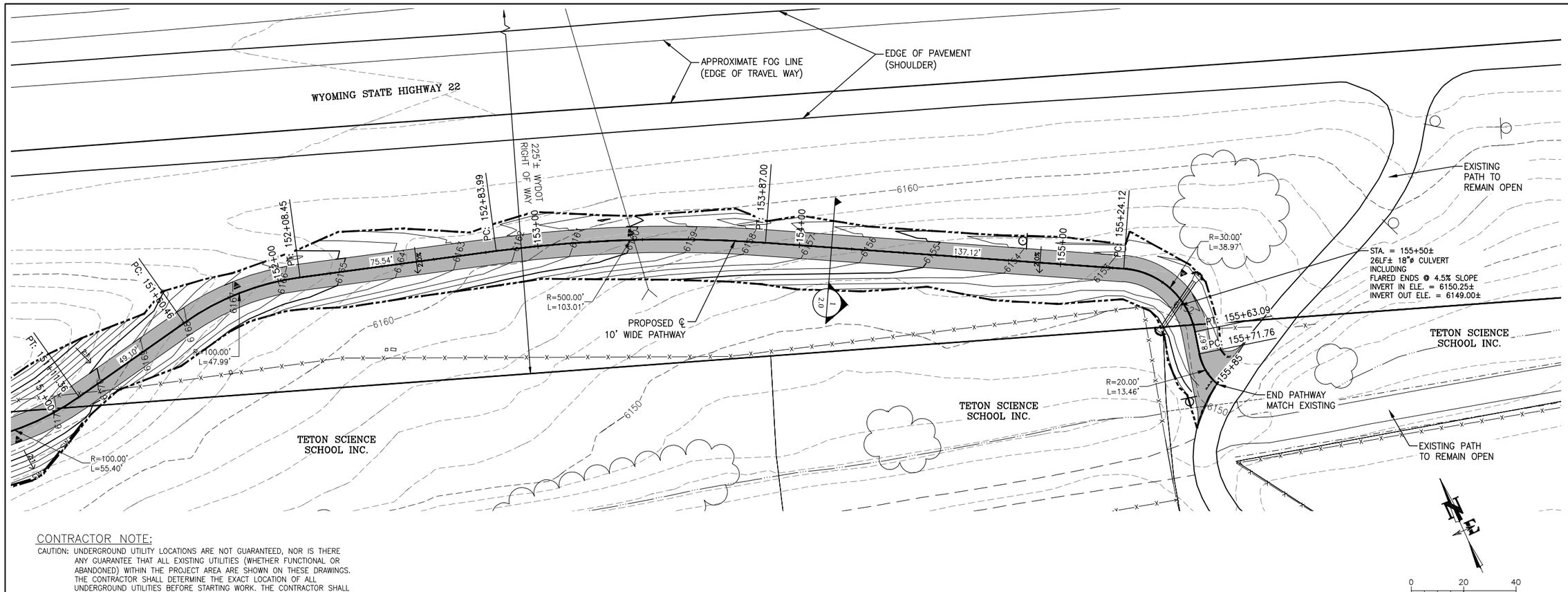

CONTRACTOR NOTE:

CAUTION: UNDERGROUND UTILITY LOCATIONS ARE NOT GUARANTEED, NOR IS THERE ANY GUARANTEE THAT ALL EXISTING UTILITIES (WHETHER FUNCTIONAL OR ABANDONED) WITHIN THE PROJECT AREA ARE SHOWN ON THESE DRAWINGS. THE CONTRACTOR SHALL DETERMINE THE EXACT LOCATION OF ALL UNDERGROUND UTILITIES BEFORE STARTING WORK. THE CONTRACTOR SHALL BE RESPONSIBLE FOR ALL DAMAGE RESULTING FROM CONTRACTORS WORK.

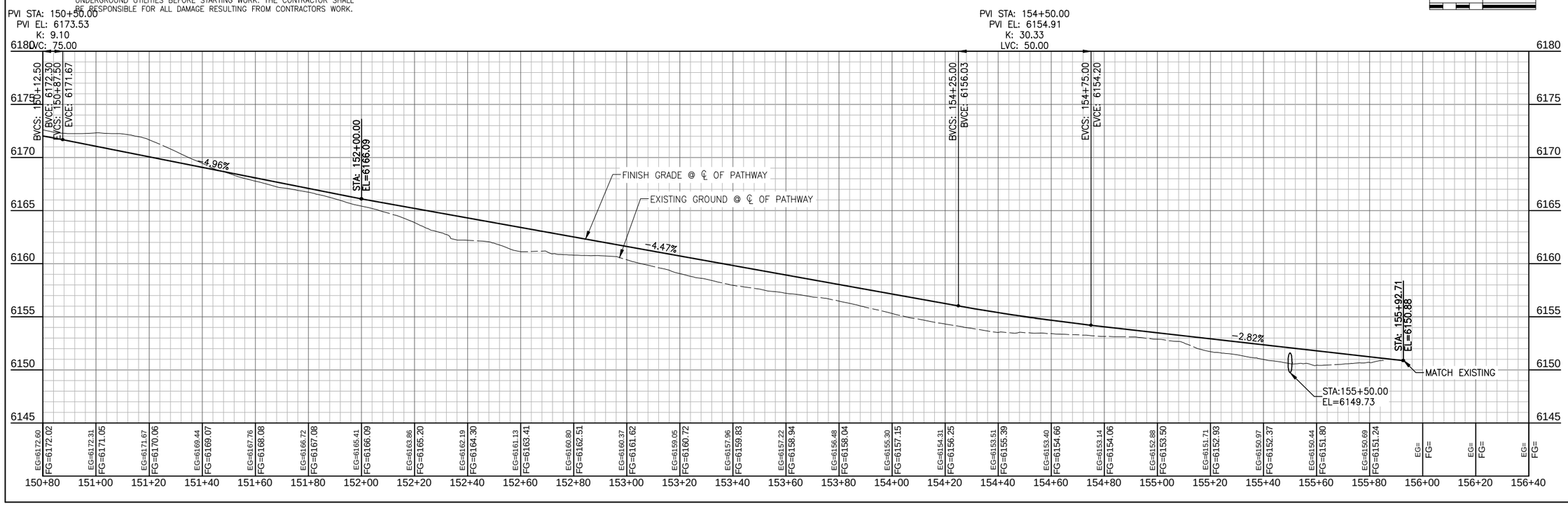

JACKSON HOLE COMMUNITY PATHWAYS PATH 22

NELSON ENGINEERING
P.O. BOX 1599, JACKSON WYOMING
(307) 733-2087

TETON COUNTY

TOWN OF JACKSON

DRAWING TITLE
PATHWAY ALIGNMENT
PLAN & PROFILE
STA. 150+80 – 156+40

REVISIONS

DRAWING NO 3.28
JOB NO 10-124-03
DATE 1/07/2015

S:\Proj2010\124-07 Ph2P22 Middle Segment\Drawings\Layouts\C193-PLAN-PROF-MIDDLE PATHWAY DESIGN CL.dwg (PROFILE) - 756x420 - Jan 07 2015 8:46:46 pm PLOTTED BY: karscher

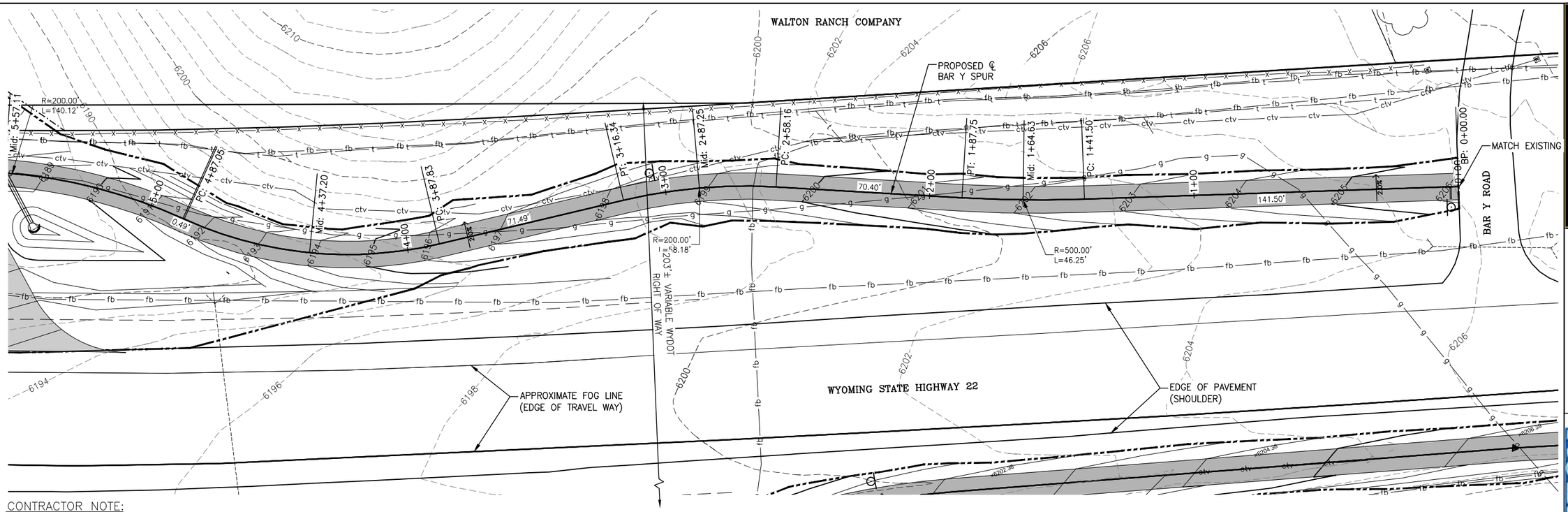

CONTRACTOR NOTE:

CAUTION: UNDERGROUND UTILITY LOCATIONS ARE NOT GUARANTEED, NOR IS THERE ANY GUARANTEE THAT ALL EXISTING UTILITIES (WHETHER FUNCTIONAL OR ABANDONED) WITHIN THE PROJECT AREA ARE SHOWN ON THESE DRAWINGS. THE CONTRACTOR SHALL DETERMINE THE EXACT LOCATION OF ALL UNDERGROUND UTILITIES BEFORE STARTING WORK. THE CONTRACTOR SHALL BE RESPONSIBLE FOR ALL DAMAGE RESULTING FROM CONTRACTORS WORK.

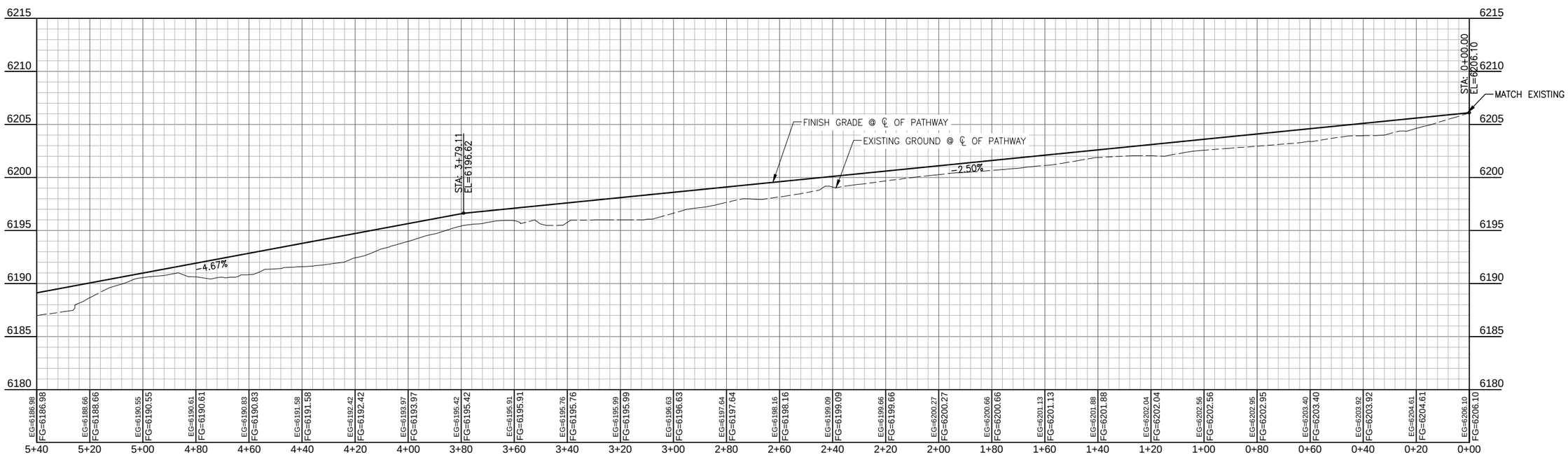

NELSON ENGINEERING
P.O. BOX 1599, JACKSON WYOMING
(307) 733-2087

DRAWING TITLE
BAR Y SPUR PATHWAY ALIGNMENT
PLAN & PROFILE
STA. 0+00 – 5+40

REVISIONS

DRAWING NO 3.29
JOB NO 10-124-03
DATE 1/07/2015

S:\Proj2010\124-07 (Path22 Middle Segment)\Drawings\Layouts\Residential Spurs.dwg (PAP BAR Y) - Jan 07 2015 01:47:59 pm PLOTTED BY kurichner

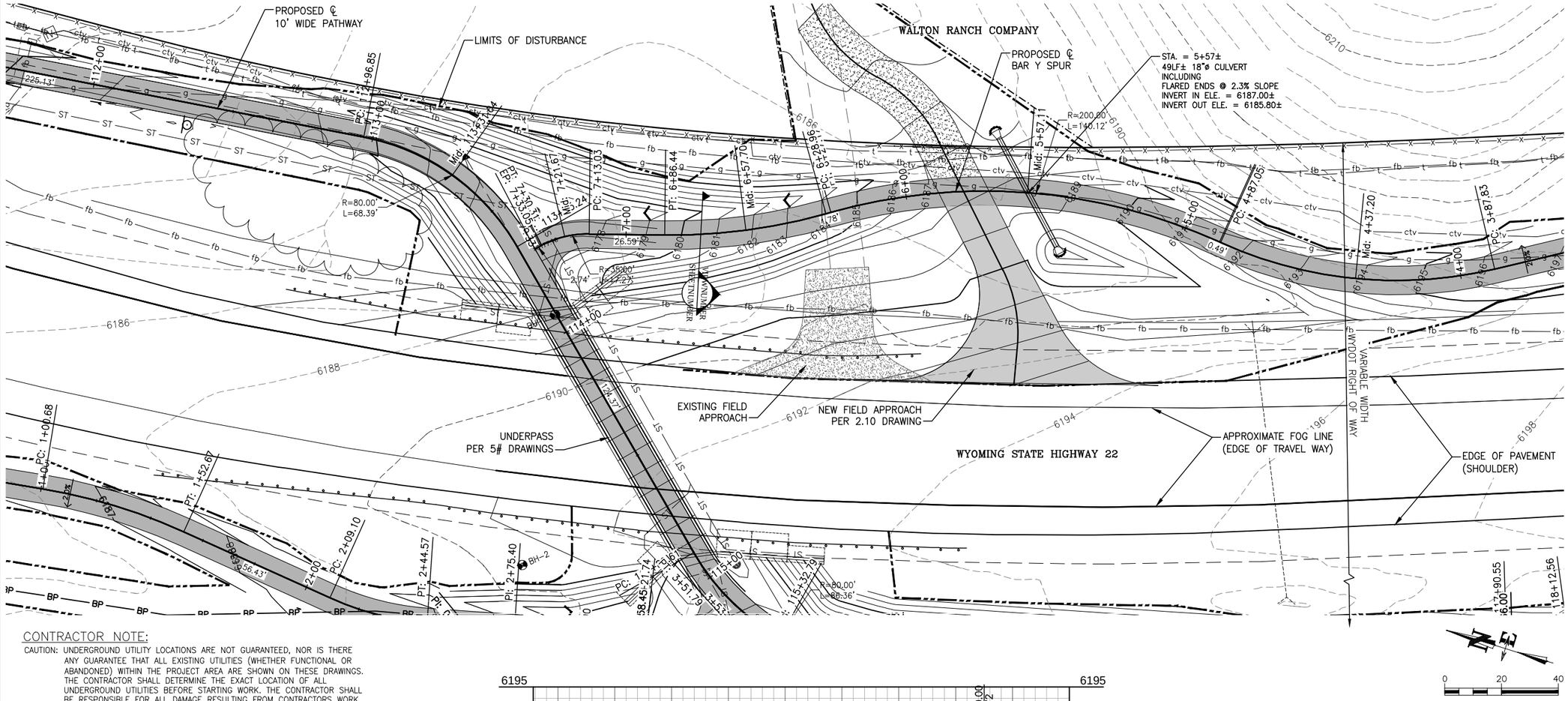

CONTRACTOR NOTE:

CAUTION: UNDERGROUND UTILITY LOCATIONS ARE NOT GUARANTEED, NOR IS THERE ANY GUARANTEE THAT ALL EXISTING UTILITIES (WHETHER FUNCTIONAL OR ABANDONED) WITHIN THE PROJECT AREA ARE SHOWN ON THESE DRAWINGS. THE CONTRACTOR SHALL DETERMINE THE EXACT LOCATION OF ALL UNDERGROUND UTILITIES BEFORE STARTING WORK. THE CONTRACTOR SHALL BE RESPONSIBLE FOR ALL DAMAGE RESULTING FROM CONTRACTORS WORK.

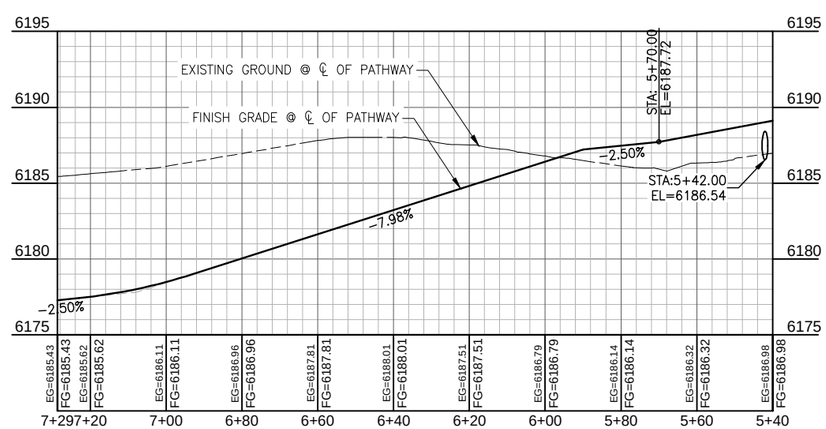

NELSON ENGINEERING
P.O. BOX 1599, JACKSON WYOMING
(307) 733-2087

DRAWING TITLE

BAR Y SPUR PATHWAY ALIGNMENT

PLAN & PROFILE

STA. 5+40 - 7+28.75

REVISIONS

DRAWING NO	JOB NO	DATE
3.30	10-124-03	1/07/2015

S:\Proj2010\124-07 Path22 Middle Segment\Drawings\Layouts\Residential Spur.dwg (PAP BAR Y (2)) - Jan 07 2015 04:49:37 pm PLOTTED BY: karchner

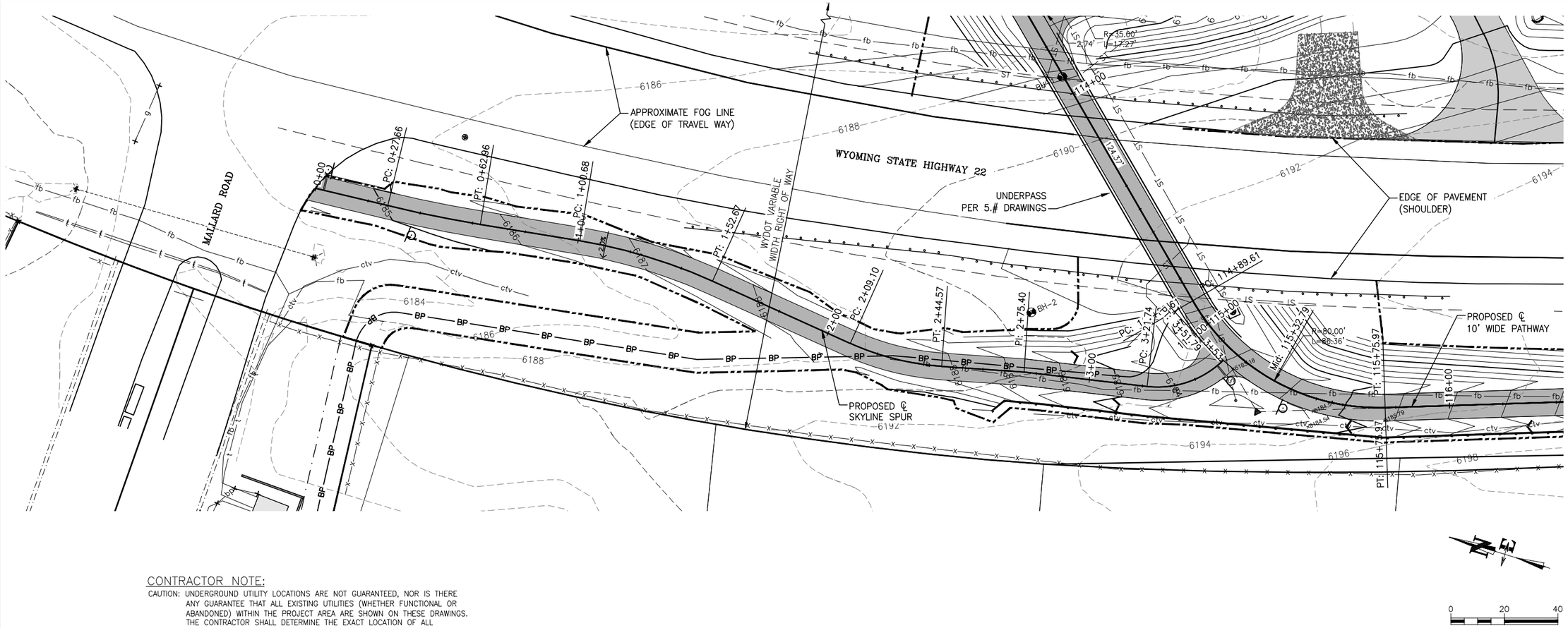

CONTRACTOR NOTE:

CAUTION: UNDERGROUND UTILITY LOCATIONS ARE NOT GUARANTEED, NOR IS THERE ANY GUARANTEE THAT ALL EXISTING UTILITIES (WHETHER FUNCTIONAL OR ABANDONED) WITHIN THE PROJECT AREA ARE SHOWN ON THESE DRAWINGS. THE CONTRACTOR SHALL DETERMINE THE EXACT LOCATION OF ALL UNDERGROUND UTILITIES BEFORE STARTING WORK. THE CONTRACTOR SHALL BE RESPONSIBLE FOR ALL DAMAGE RESULTING FROM CONTRACTORS WORK.

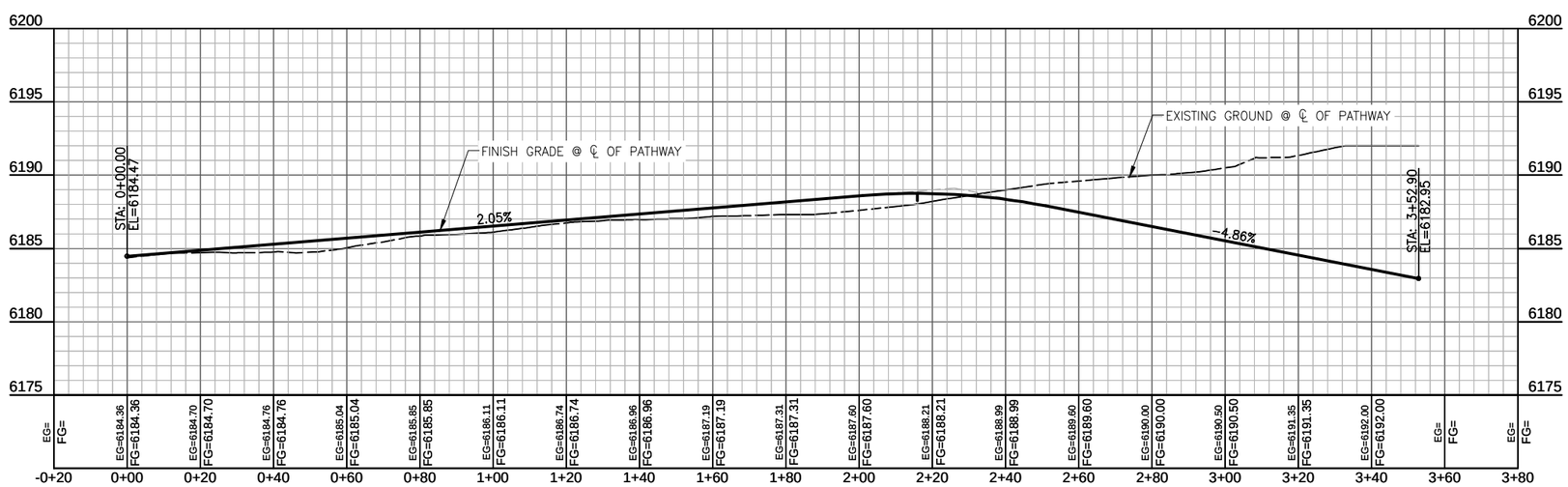

PATH 22

NELSON ENGINEERING
P.O. BOX 1599, JACKSON WYOMING
(307) 733-2087

TETON COUNTY

DRAWING TITLE
SKYLINE SPUR PATHWAY ALIGNMENT
PLAN & PROFILE
STA. 0+00 – 3+59.11

REVISIONS

DRAWING NO 3.31
JOB NO 10-124-03
DATE 1/07/2015

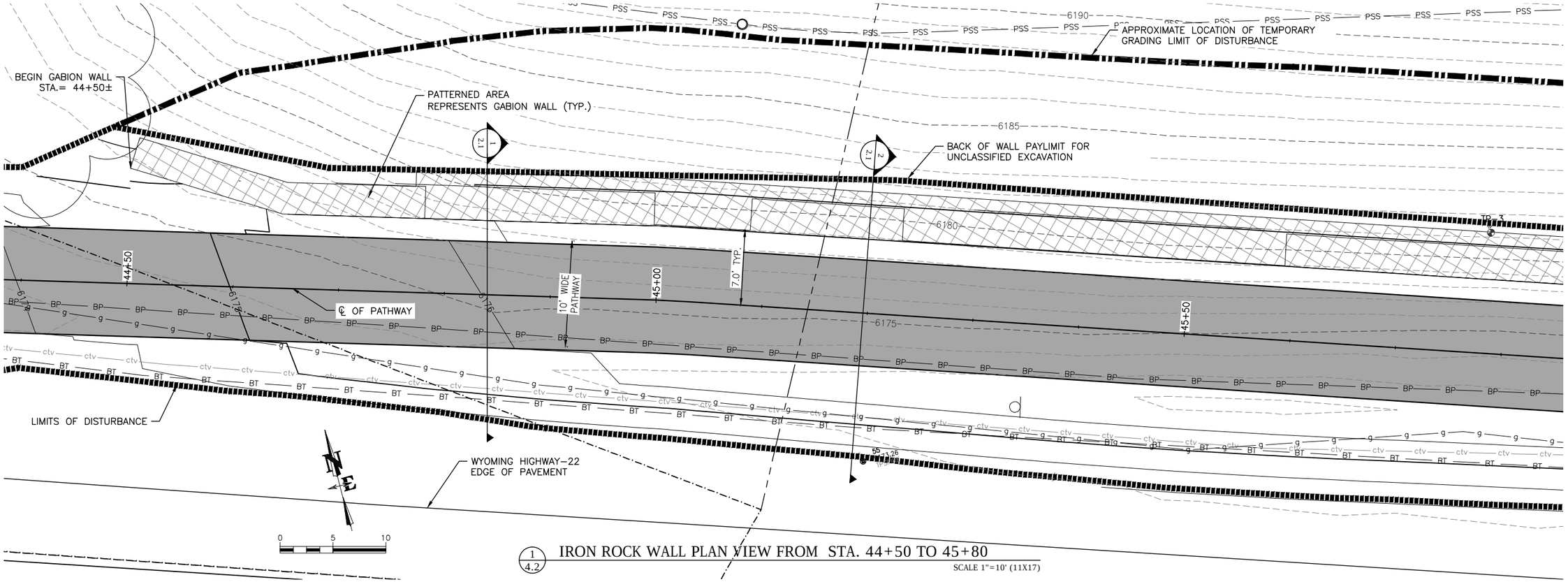

1/4.2 IRON ROCK WALL PLAN VIEW FROM STA. 44+50 TO 45+80

SCALE 1"=10' (11X17)

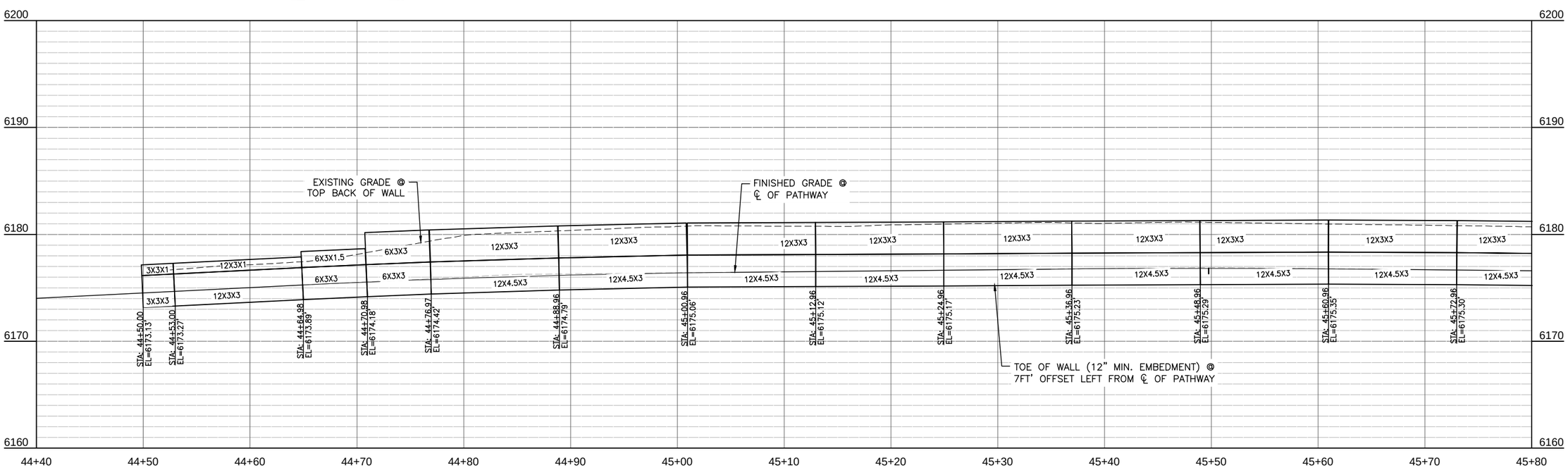

2/4.2 IRON ROCK WALL ELEVATION VIEW FROM STA. 44+50 TO 45+80

SCALE 1"=10' (11X17)

NELSON ENGINEERING
P.O. BOX 1599, JACKSON WYOMING
(307) 733-2087

DRAWING TITLE
IRON ROCK RETAINING WALL
ELEVATION VIEW
STA. 44+50 TO 45+80

REVISIONS

DRAWING NO 4.0
JOB NO 10-124-03
DATE 1/07/2015

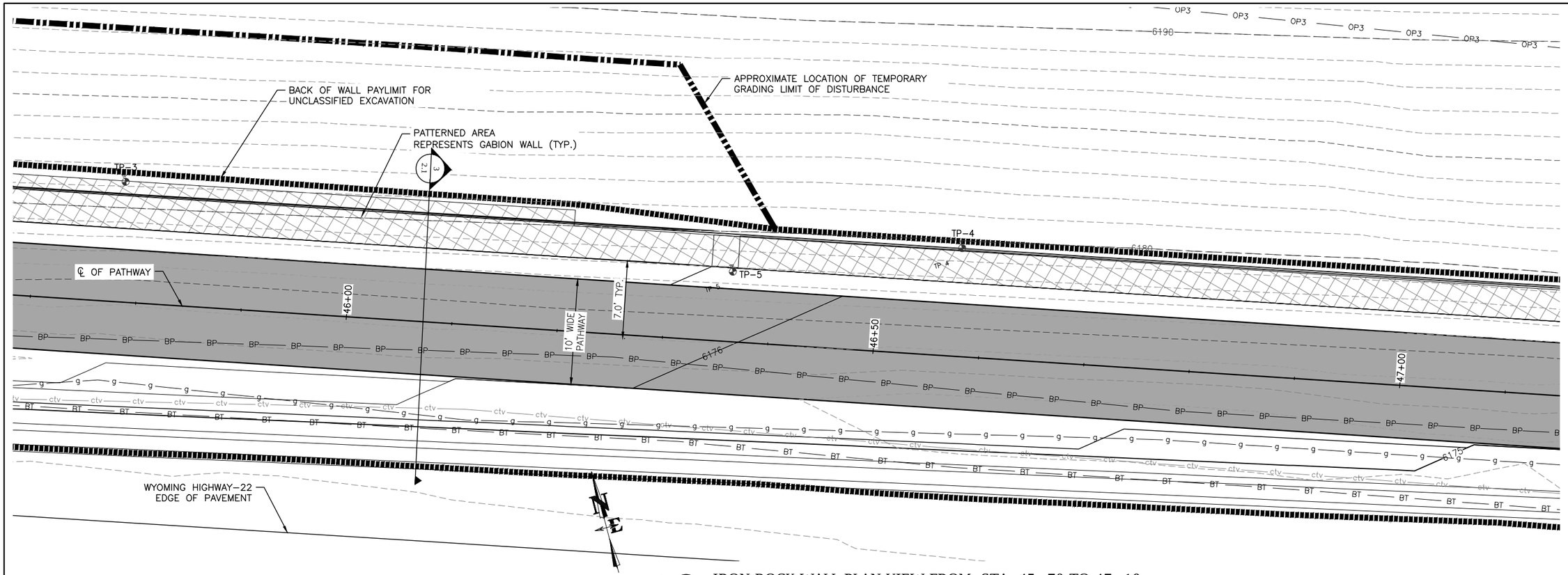

0 5 10

1 / 4.3 IRON ROCK WALL PLAN VIEW FROM STA. 45+70 TO 47+10

SCALE 1"=10' (11X17)

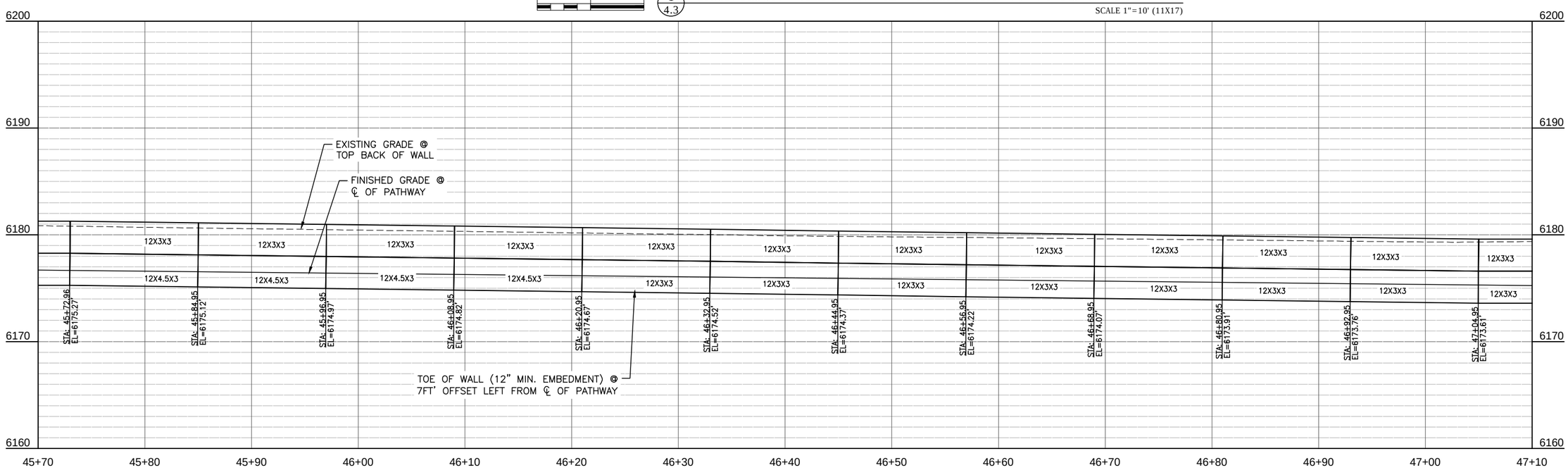

2 / 4.3 IRON ROCK WALL ELEVATION VIEW FROM STA. 45+70 TO 47+10

SCALE 1"=10' (11X17)

JACKSON HOLE COMMUNITY PATHWAYS
PATH 22

NELSON ENGINEERING
P.O. BOX 1599, JACKSON WYOMING
(307) 733-2087

TETON COUNTY WYOMING

TOWN OF JACKSON

DRAWING TITLE
IRON ROCK RETAINING WALL
ELEVATION VIEW
STA. 45+70 TO 47+10

REVISIONS

DRAWING NO 4.1
JOB NO 10-124-03
DATE 1/07/2015

S:\Proj2010\124-07 Pathway Segment\Drawings\Pathway West\Layouts\Iron Rock Wall Elevation Viewing (4.3) - Jan 07 2015 01:50:37 pm PLOTTED BY: kurichner

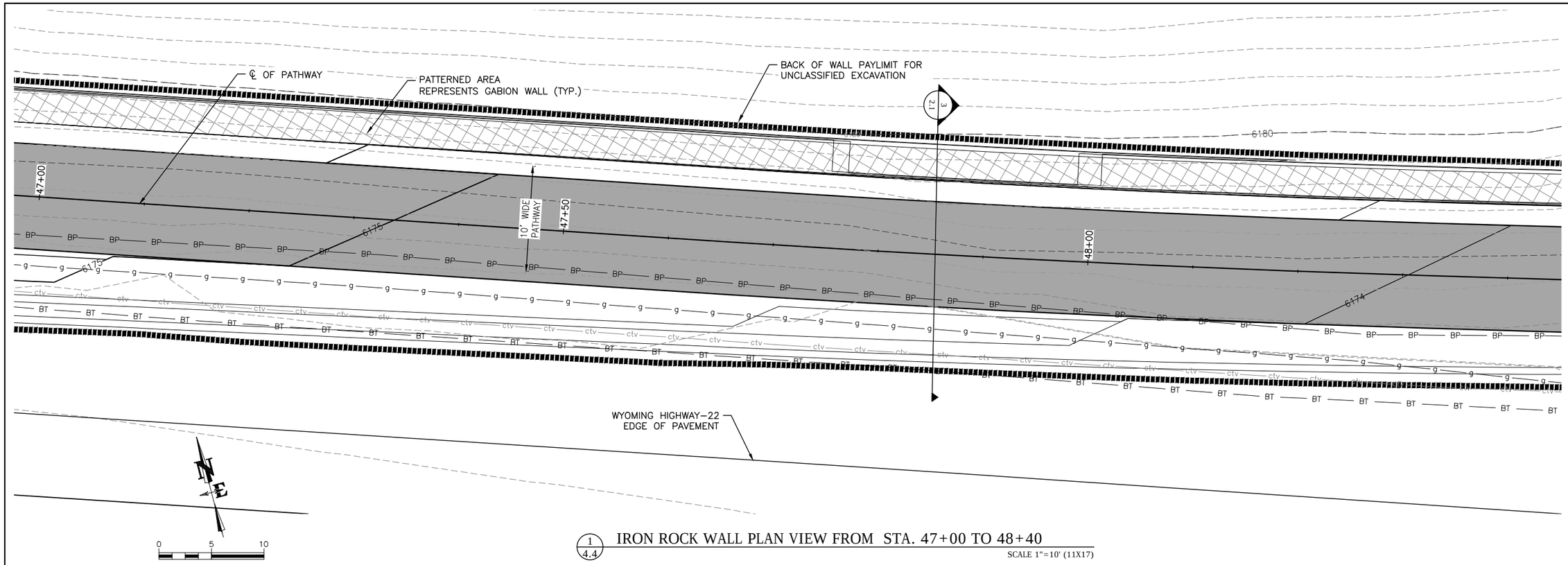

1 / 4.4 IRON ROCK WALL PLAN VIEW FROM STA. 47+00 TO 48+40

SCALE 1"=10' (11X17)

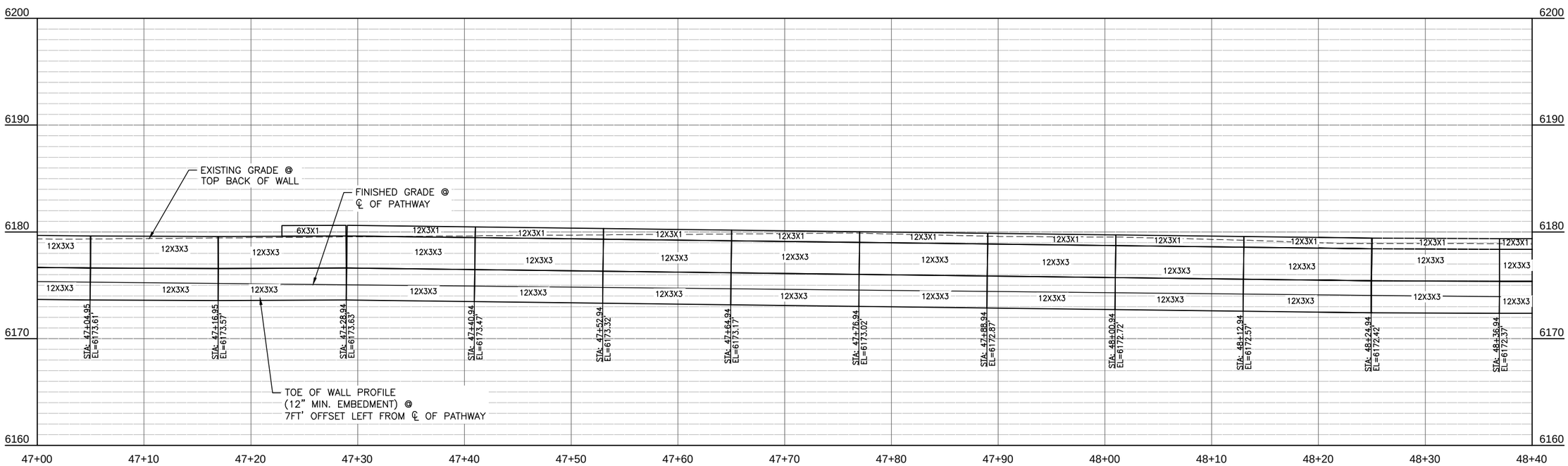

2 / 4.4 IRON ROCK WALL ELEVATION VIEW FROM STA. 47+00 TO 48+40

SCALE 1"=10' (11X17)

NELSON ENGINEERING
P.O. BOX 1599, JACKSON WYOMING
(307) 733-2087

DRAWING TITLE
IRON ROCK RETAINING WALL
ELEVATION VIEW
STA. 47+0 TO 48+40

REVISIONS

DRAWING NO 4.2

JOB NO 10-124-03

DATE 1/07/2015

S:\Proj2010\124-07 (Path22 Middle Segment)\Drawings\Pathway West\Layouts\Iron Rock Wall Elevation View.dwg (4.4) - Jan 07 2015 01:51:02 pm PLOTTED BY: kurschner

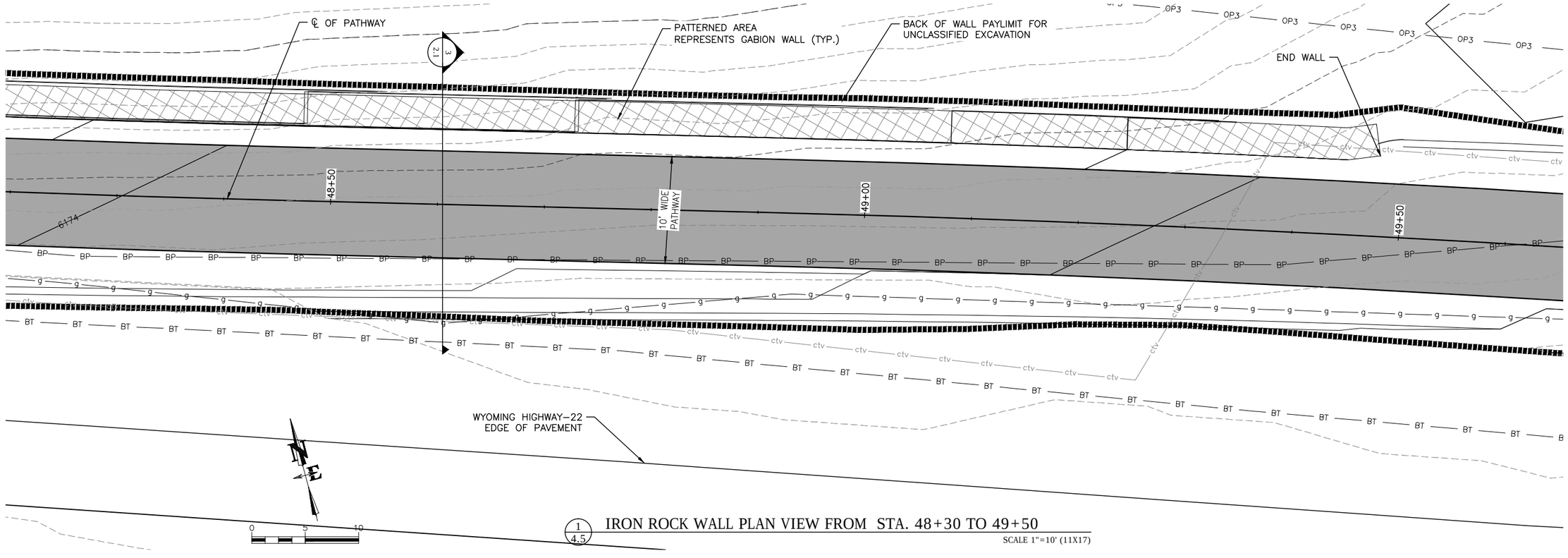

1/4.5 IRON ROCK WALL PLAN VIEW FROM STA. 48+30 TO 49+50

SCALE 1"=10' (11X17)

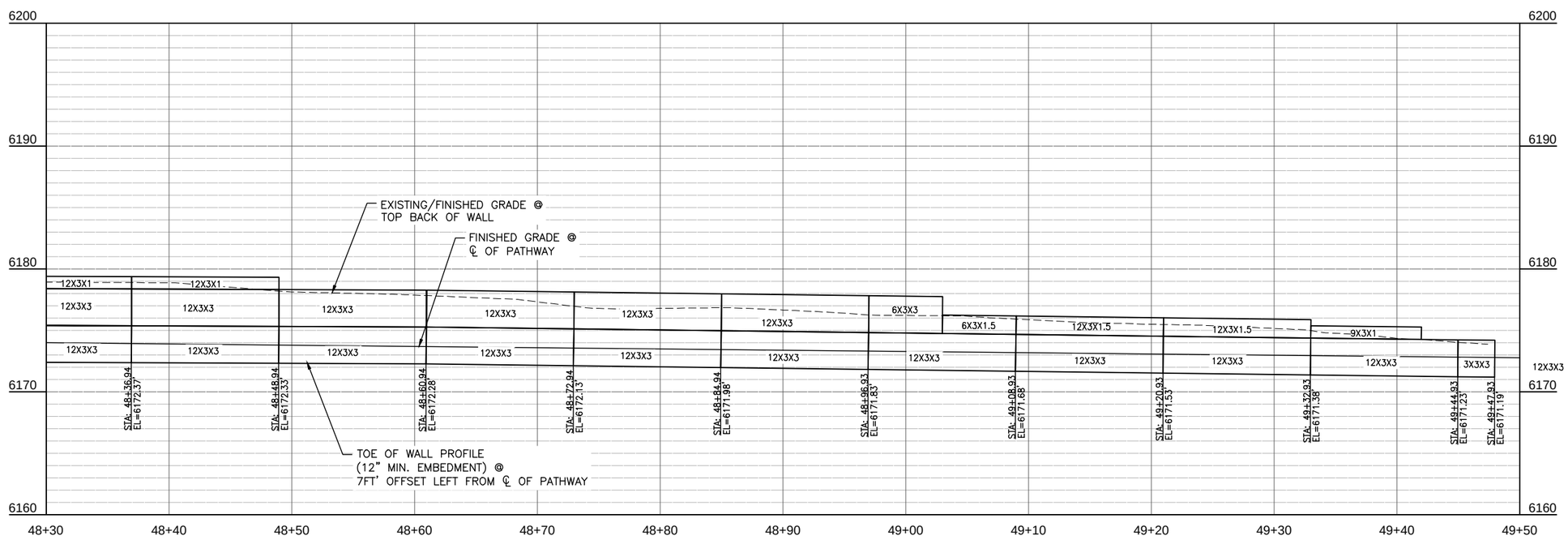

2/4.5 IRON ROCK WALL ELEVATION VIEW FROM STA. 48+30 TO 49+50

SCALE 1"=10' (11X17)

JACKSON HOLE COMMUNITY PATHWAYS

PATH 22

NELSON ENGINEERING
P.O. BOX 1599, JACKSON WYOMING
(307) 733-2087

TETON COUNTY WYOMING

DRAWING TITLE
IRON ROCK RETAINING WALL
ELEVATION VIEW
STA. 48+30 TO 49+50

REVISIONS

DRAWING NO 4.3

JOB NO 10-124-03

DATE 1/07/2015

S:\Proj2010\124-07 (Path22 Middle Segment)\Drawings\Pathway West\Layouts\Iron Rock Wall Elevation Views.dwg (4.5) - Jan 07 2015 01:51:27 pm PLOTTED BY: kurichner

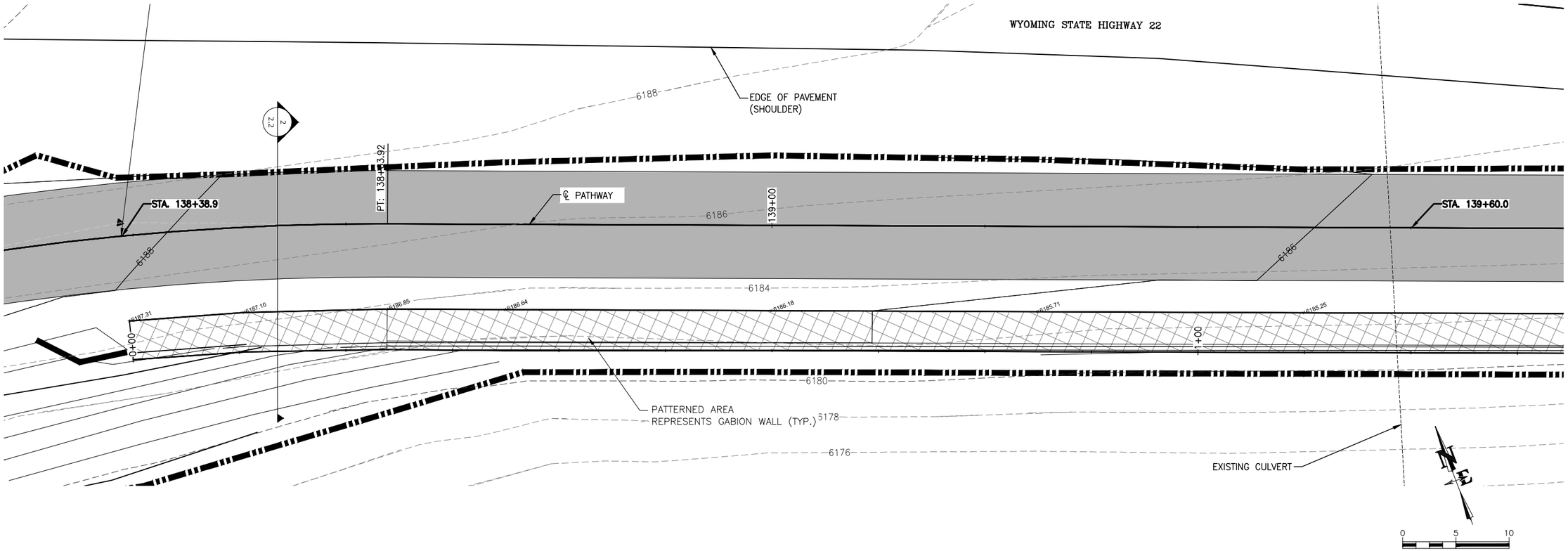

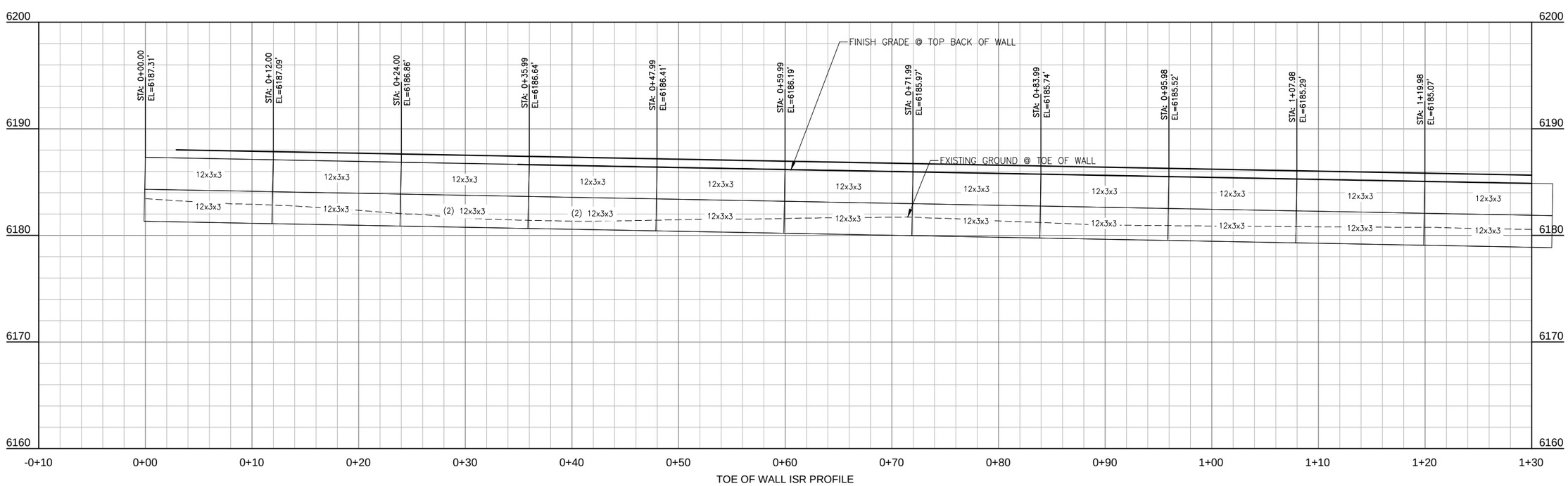

JACKSON HOLE COMMUNITY PATHWAYS
PATH 22

NELSON ENGINEERING
P.O. BOX 1599, JACKSON WYOMING
(307) 733-2087

TETON COUNTY

DRAWING TITLE
INDIAN SPRINGS RETAINING WALL
ELEVATION VIEW
STA. 138+40 TO 139+60

REVISIONS

DRAWING NO 4.4
JOB NO 10-124-03
DATE 1/07/2015

S:\Proj2010\124-07 (Pathway22 Middle Segment)\Drawings\Layouts\ISR GABION WALL.dwg <ISR GABION LAYOUT START> - Jan 07 2015 01:52:29 pm PLOTTED BY: karichner

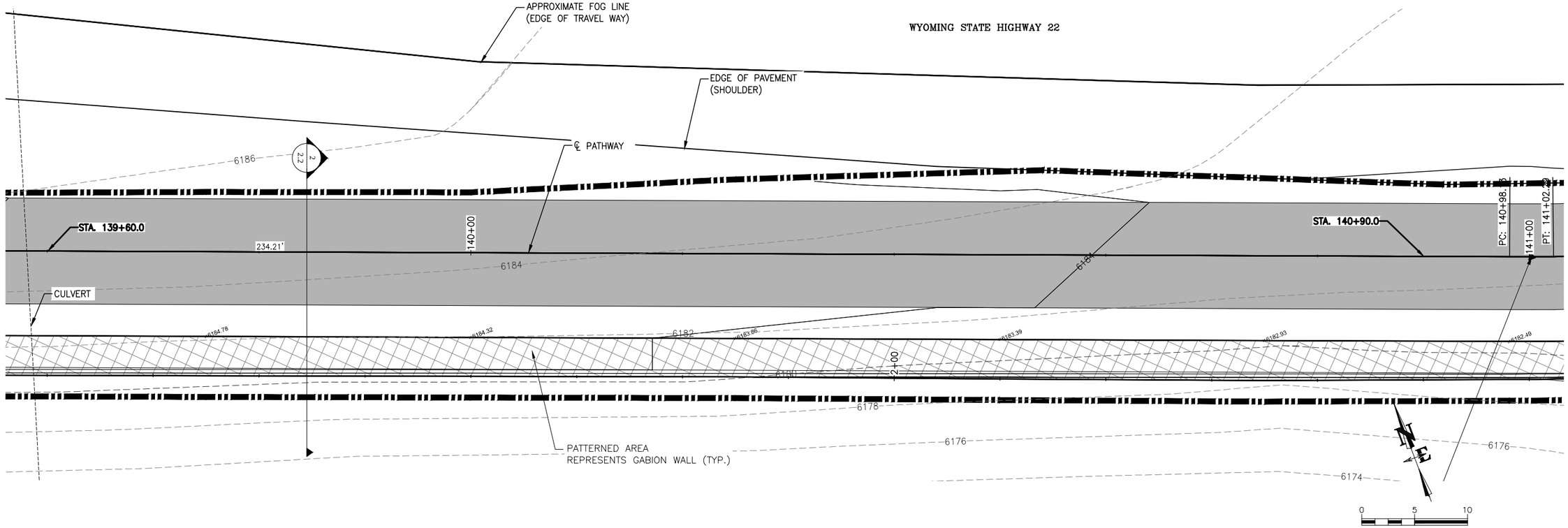

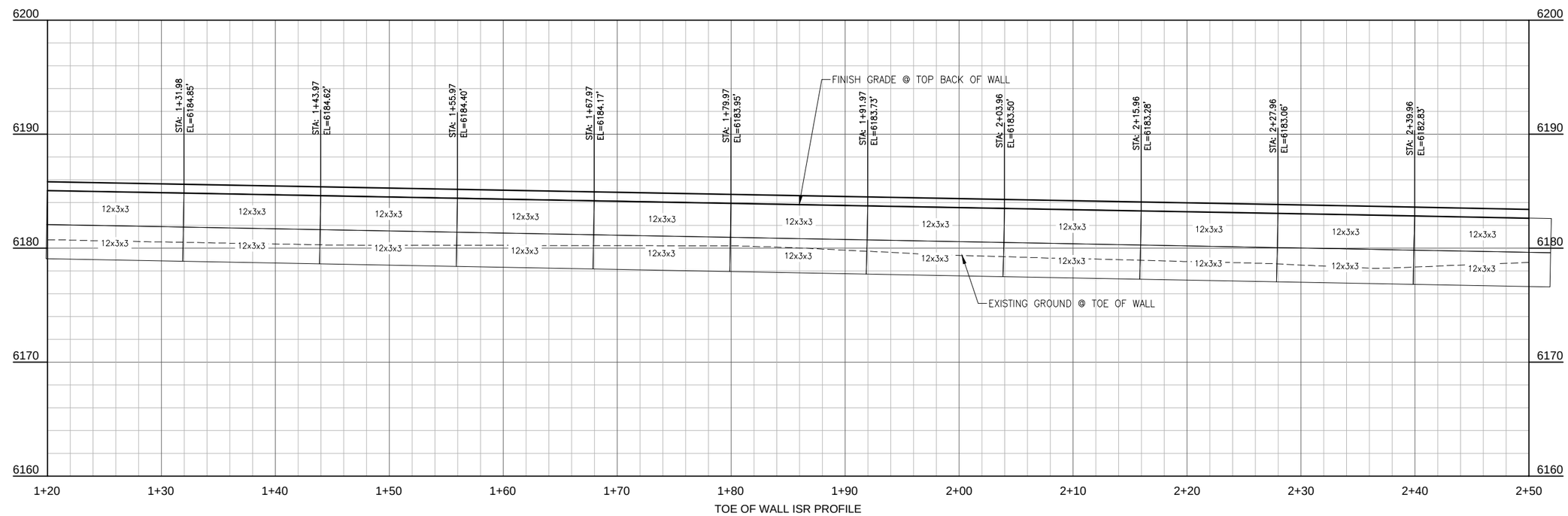

JACKSON HOLE COMMUNITY PATHWAYS
PATH 22

NELSON ENGINEERING
P.O. BOX 1599, JACKSON WYOMING
(307) 733-2087

TETON COUNTY

TOWN OF JACKSON WYOMING

DRAWING TITLE
INDIAN SPRINGS RETAINING WALL
ELEVATION VIEW
STA. 139+60 TO 140+90

REVISIONS

DRAWING NO 4.5
JOB NO 10-124-03
DATE 1/07/2015

S:\Proj2010\124-07 (Path22 Middle Segment)\Drawings\Layouts\ISR GABION WALL.dwg <ISR GABION LAYOUT MID> - Jan 07 2015 01:52:56 pm PLOTTED BY: kerichner

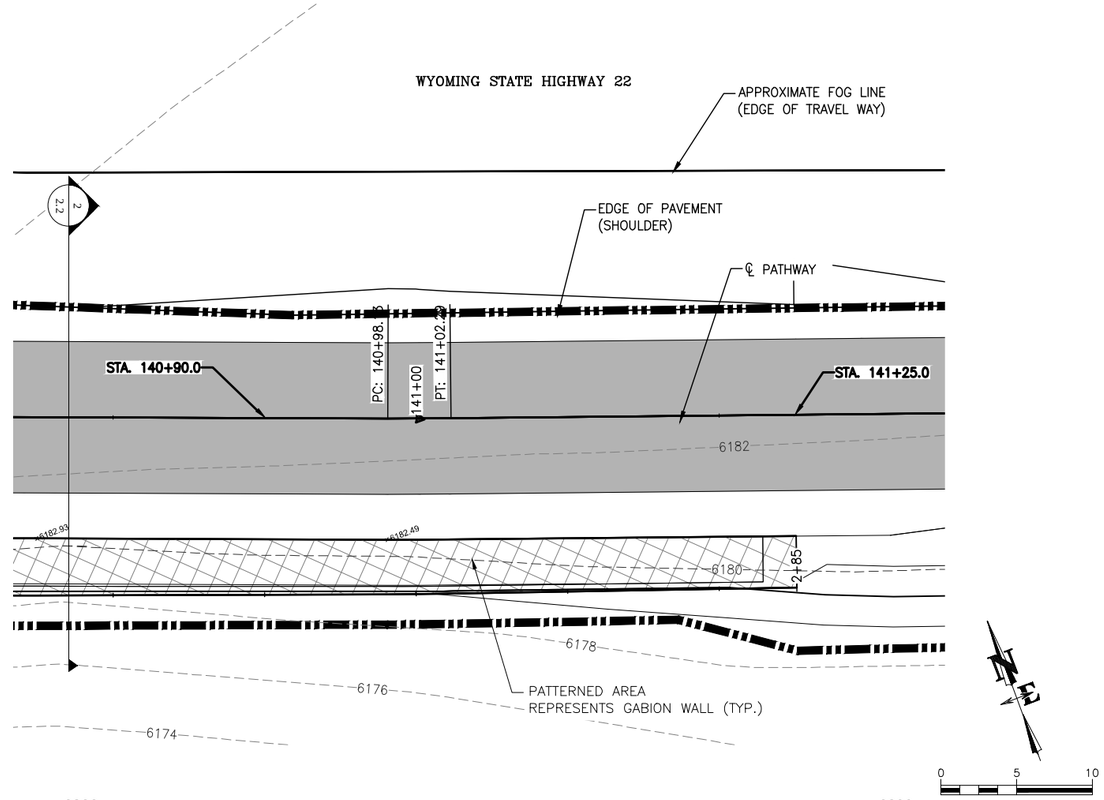

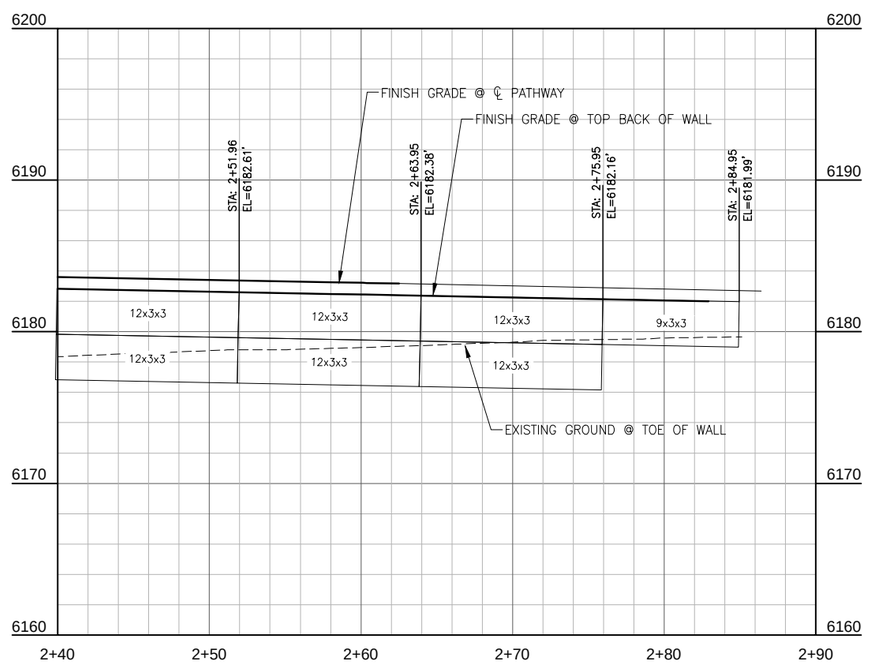

TOE OF WALL ISR PROFILE

S:\Proj2010\124-07 (Path22 Middle Segment)\Drawings\Layouts\ISR GABION WALL.dwg <ISR GABION LAYOUT END> - Jan 07 2015 01:52:21 pm PLOTTED BY: karichner

JACKSON HOLE COMMUNITY PATHWAYS
PATH 22
JACKSON HOLE COMMUNITY PATHWAYS

NELSON ENGINEERING
P.O. BOX 1599, JACKSON WYOMING
(307) 733-2087

TETON COUNTY

TOWN OF JACKSON WYOMING

DRAWING TITLE
INDIAN SPRINGS RETAINING WALL
ELEVATION VIEW
STA. 140+90 TO 141+25

REVISIONS

DRAWING NO 4.6
JOB NO 10-124-03
DATE 1/07/2015

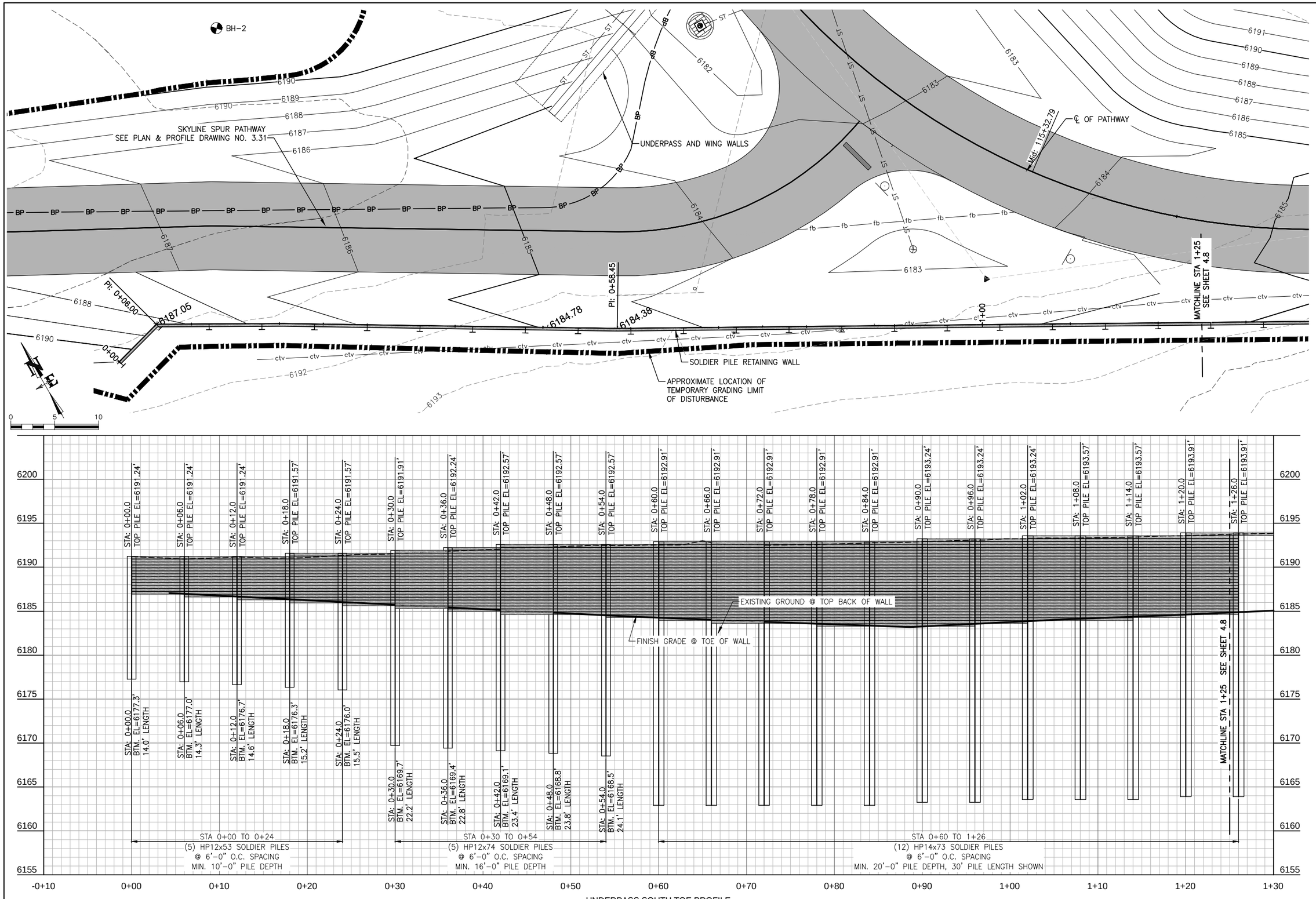

JACKSON HOLE COMMUNITY PATHWAYS

PATH 22

NELSON ENGINEERING
P.O. BOX 1599, JACKSON WYOMING
(307) 733-2087

TETON COUNTY WYOMING

DRAWING TITLE
SOLDIER PILE RETAINING WALL
ELEVATION VIEW
STA. 0+00 TO 1+30

REVISIONS

DRAWING NO 4.7
JOB NO 10-124-03
DATE 1/07/2015

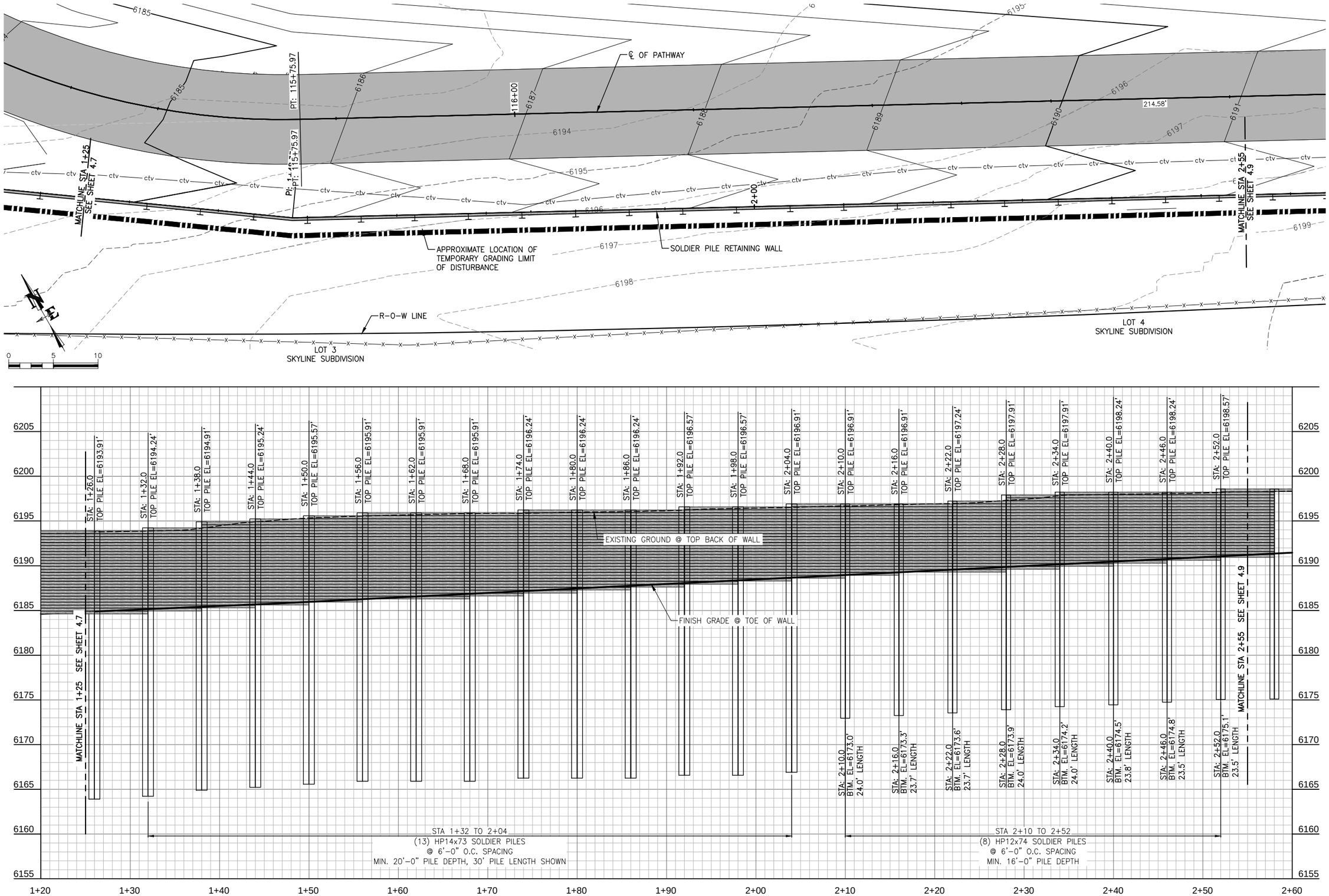

UNDERPASS SOUTH TOE PROFILE

JACKSON HOLE COMMUNITY PATHWAYS

PATH 22

NELSON ENGINEERING
P.O. BOX 1599, JACKSON WYOMING
(307) 733-2087

TETON COUNTY

DRAWING TITLE
SOLDIER PILE RETAINING WALL
ELEVATION VIEW
STA. 1+30 TO 2+60

REVISIONS

DRAWING NO 4.8
JOB NO 10-124-03
DATE 1/07/2015

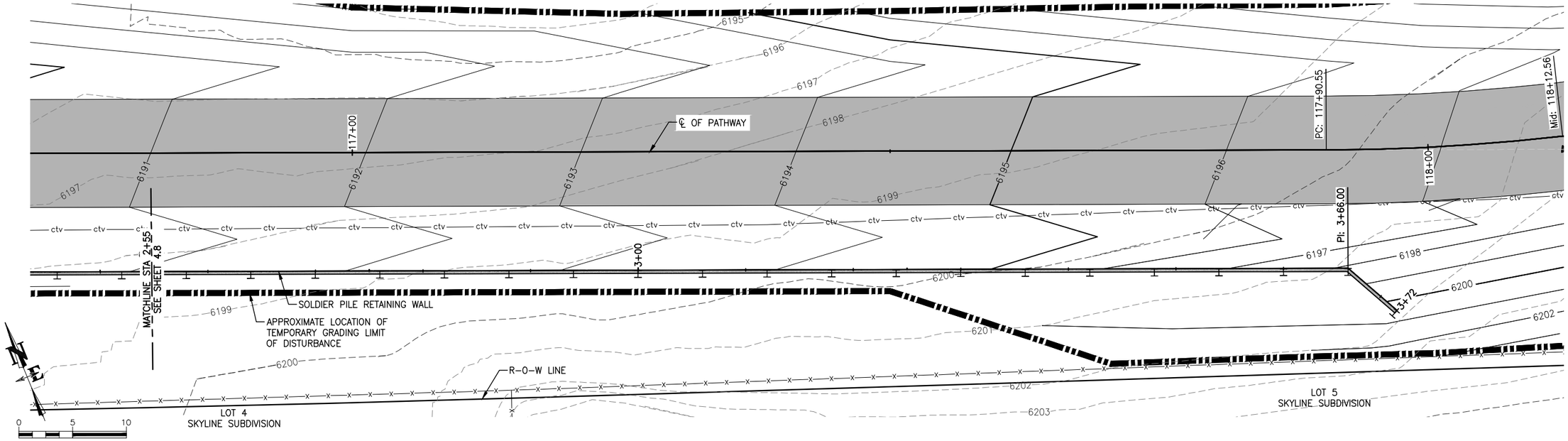

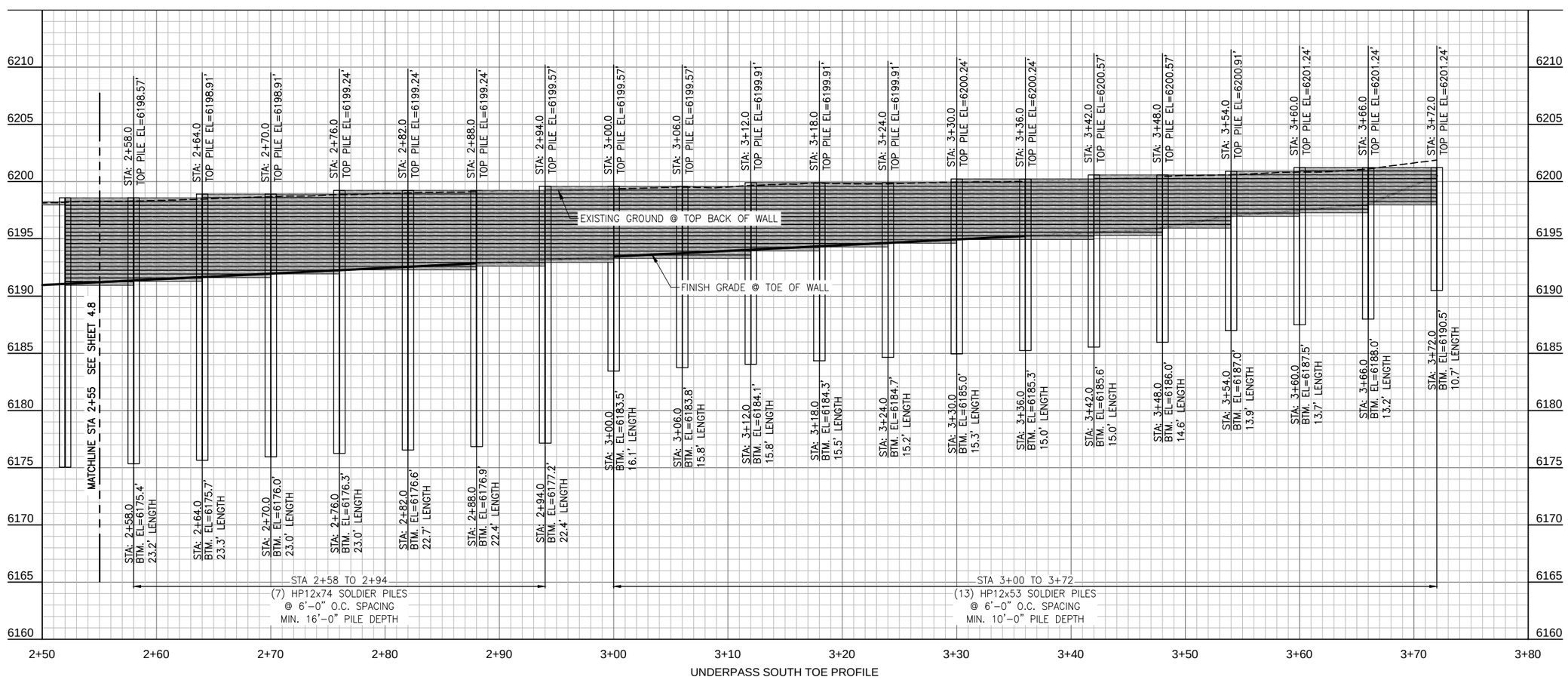

UNDERPASS SOUTH TOE PROFILE

PATH 22

NELSON ENGINEERING
P.O. BOX 1599, JACKSON WYOMING
(307) 733-2087

TETON COUNTY

DRAWING TITLE
SOLDIER PILE RETAINING WALL
ELEVATION VIEW
STA. 2+60 TO 3+42

REVISIONS

DRAWING NO 4.9
JOB NO 10-124-03
DATE 1/07/2015

GENERAL STRUCTURAL NOTES

A. DRAWINGS AND SPECIFICATIONS

1. The General Structural Notes apply to structural components of the "Soldier Pile Retaining Wall," for the Wyoming State Highway 22 Pathway Connector located in Teton County, Wyoming.
2. These notes and drawings were prepared for the site described herein. Use of these documents for construction on any other site requires written permission from the Engineer.
3. Contractor shall verify all dimensions and site conditions in the field prior to construction.

B. GOVERNING CODES AND REFERENCES

1. International Building Code (IBC), 2006 Edition.
2. Building Code Requirements for Structural Concrete, American Concrete Institute (ACI 318–05).
3. Steel Construction Manual, Thirteenth Edition, American Institute of Steel Construction (AISC)
4. National Design Specification (NDS) for Wood Construction, 2001 Edition.
5. Retaining Wall Design Guide, US Department of Transportation FHWA–FLP–94–006
6. Design Loads for Buildings and other structures, (ASCE 7–05)

C. STRUCTURAL STEEL

MODIFY TO REFER TO AND OR MATCH WYDOT PILE SPEC

1. Steel materials:
   HP Shapes: ASTM A 992, Fy=50ksi
2. Structural steel design, fabrication and erection shall conform to the AISC "Code of Standard Practice for Steel Buildings and Bridges" as modified by the structural drawings and/or project specifications.
3. Structural steel shall be fabricated in a plant certified by the AISC as qualified to fabricate Category I – Conventional Steel Structures OR the be fabricator shall demonstrate a consistent record of at least 10 successful projects of similar or greater magnitude over the preceding 5 years.
4. Structural members dependent upon concrete or other structural members for support shall be adequately braced until all the structure is complete.
5. Splicing of steel members is not permitted.
6. Changes in size or position of structural elemerts are prohibited unless noted as proposed changes on the shop drawings, and accepted by the Engineer.
7. The out of vertical plumbness of the soldier pile shall not exceed 0.83%.

D. TIMBER LAGGING

The following wood framing specifications and notes shall apply:

1. Permanent lagging is to consist of pressure treated 4"x4" Douglas Fir No. 1 or better.
2. All wood shall be preservative pressure treated in conformance with the American Wood Preservers' Association AWPA C–1.
3. Permanent lagging is to be placed behind the front flange of the Soldier Pile and cut to approximate length. All lagging members shall be secured against the soldier pile web with wood wedges or shims.
4. The granular fill behind the lagging should be in contact with the lagging and compacted to keep the lagging in position.
5. 2"x4" 12" long pressure treated wood spacer should be nailed to the top of the 4"x4" lagging at each end for drainage between lagging.

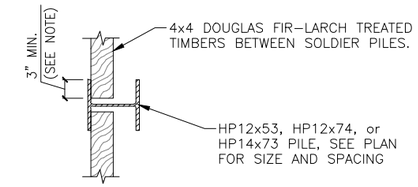

NOTE:
TIMBERS TO EXTEND 3" MIN.
BEHIND FLANGE OF SOLDIER PILES.

1/4.10 TYPICAL SOLDIER PILE PLAN VIEW

SCALE: 1/2" = 1'-0" (11x17)

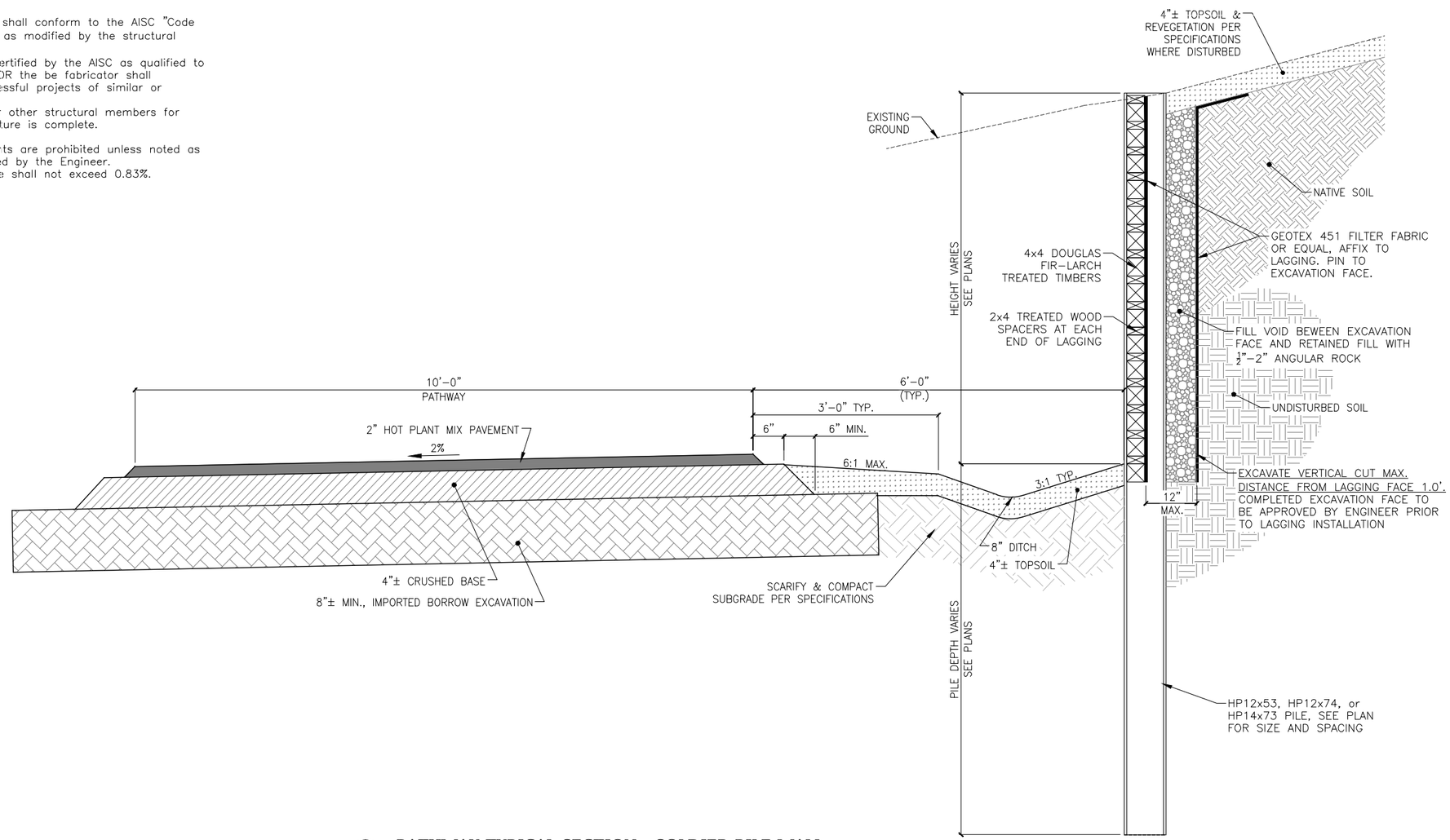

2/4.10 PATHWAY TYPICAL SECTION - SOLDIER PILE WALL

SCALE: 1/2" = 1'-0" (11x17)

JACKSON HOLE COMMUNITY PATHWAYS
PATH 22
JACKSON HOLE COMMUNITY PATHWAYS

NELSON ENGINEERING
P.O. BOX 1599, JACKSON WYOMING
(307) 733–2087

TETON COUNTY

TOWN OF JACKSON WYOMING

DRAWING TITLE
UNDERPASS SOLDIER PILE WALL
DETAILS

REVISIONS

DRAWING NO 4.10
JOB NO 10–124–03
DATE 1/07/2015

S:\Proj2010\124-07 (Path22 Middle Segment)\Drawings\Layouts\Soldier Pile Retaining Wall Details.dwg (Soldier Wall Details) - Jan 07 2015 10:56:26 pm PLOTTED BY kurchner

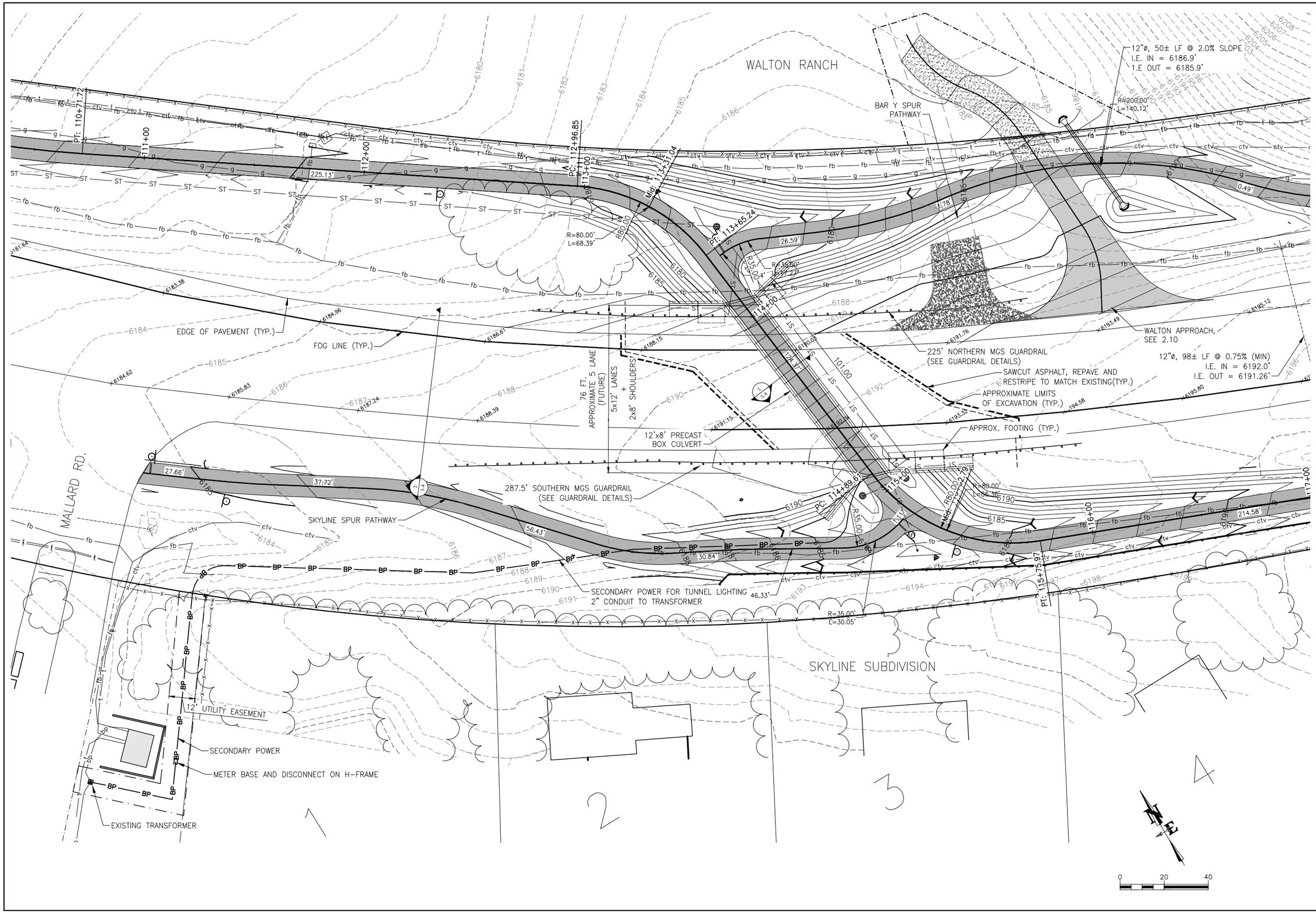

JACKSON HOLE COMMUNITY PATHWAYS
PATH 22

NELSON ENGINEERING
P.O. BOX 1599, JACKSON WYOMING
(307) 733-2087

TETON COUNTY

TOWN OF JACKSON

DRAWING TITLE
SKYLINE UNDERPASS
GRADING PLAN AND DETAILS

REVISIONS

DRAWING NO 5.0

JOB NO 10-124-03

DATE 1/07/2015

S:\Proj2010\124-07 (Path22 Middle Segment3)\Drawings\Design\V1-02 PATHWAY SKYLINE UNDERPASS.dwg (5.0 UNDERPASS GRADING PLAN) - Jan 07 2015 01:58:17 pm PLOTTED BY: Karl Schner

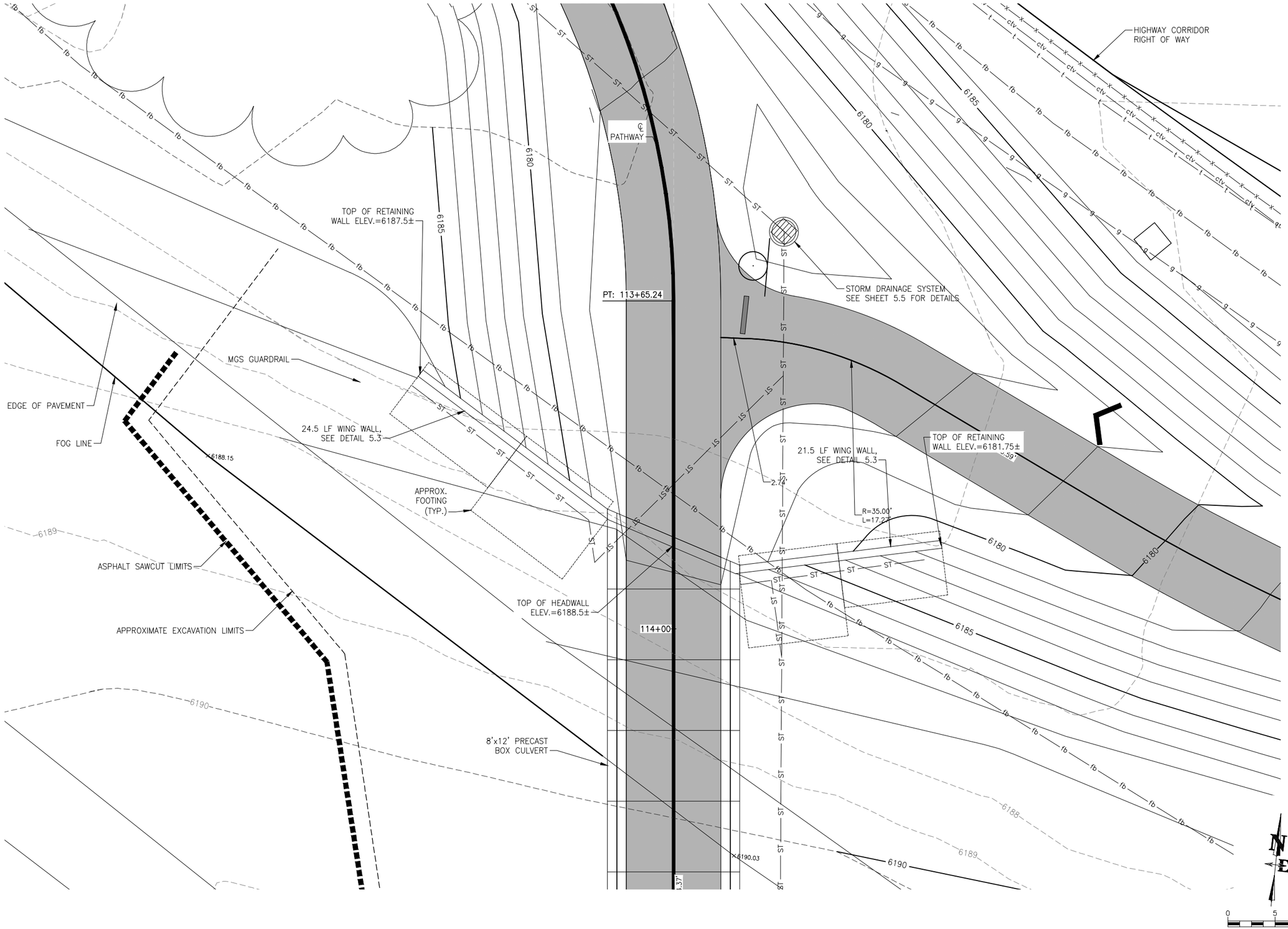

JACKSON HOLE COMMUNITY PATHWAYS
PATH 22

NELSON ENGINEERING
P.O. BOX 1599, JACKSON WYOMING
(307) 733-2087

TETON COUNTY

TOWN OF JACKSON

DRAWING TITLE
HWY 22 UNDERPASS
NORTH ENTRY / EXIT PLAN VIEW

REVISIONS

DRAWING NO
5.1

JOB NO
10-124-03

DATE
1/07/2015

S:\Proj2010\124-07 Path22 Middle Segment\Drawings\Design\V1-22 PATHWAY SKYLINE UNDERPASS.dwg (S1 UNDERPASS NORTH END) - Jan 07 2015 01:58:45 pm PLOTTED BY: karlchner

PATH 22

NELSON ENGINEERING
P.O. BOX 1599, JACKSON WYOMING
(307) 733-2087

TETON COUNTY

DRAWING TITLE
HWY 22 UNDERPASS
SOUTH ENTRY / EXIT PLAN VIEW

REVISIONS

DRAWING NO 5.2
JOB NO 10-124-03
DATE 1/07/2015

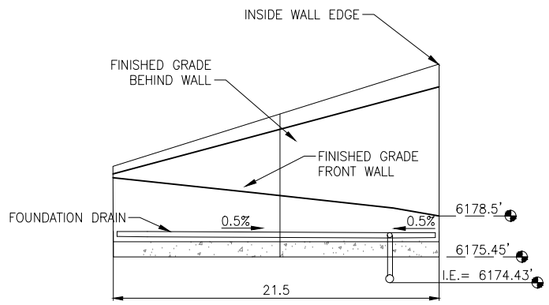

1 / 5.3 NORTHEAST WING WALL
Scale: 1"=10'

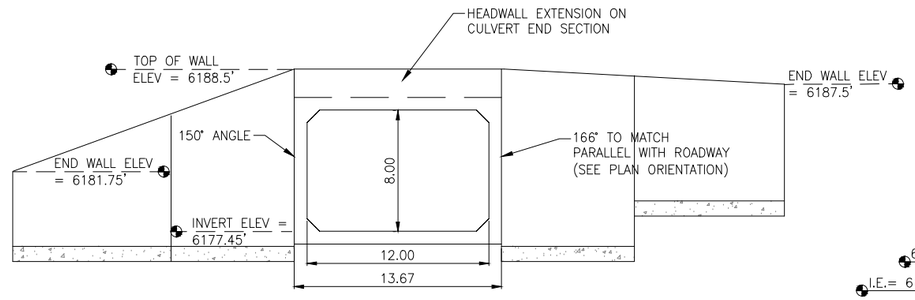

2 / 5.3 NORTH END ELEVATION
Scale: 1"=10'

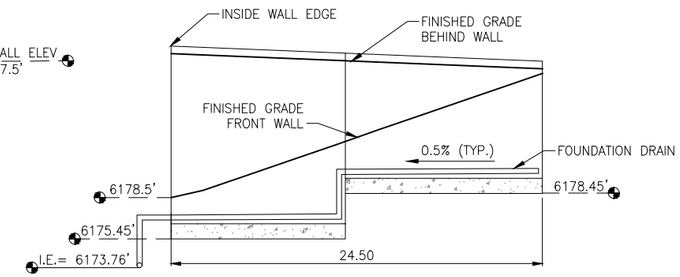

3 / 5.3 NORTHWEST WING WALL
Scale: 1"=10'

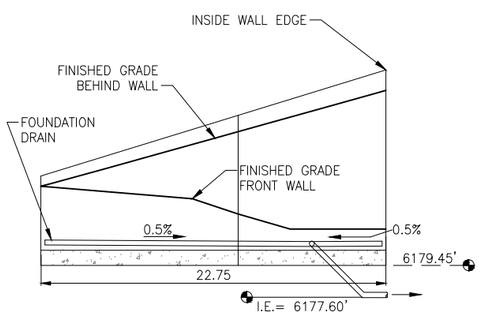

4 / 5.3 SOUTHWEST WING WALL
Scale: 1"=10'

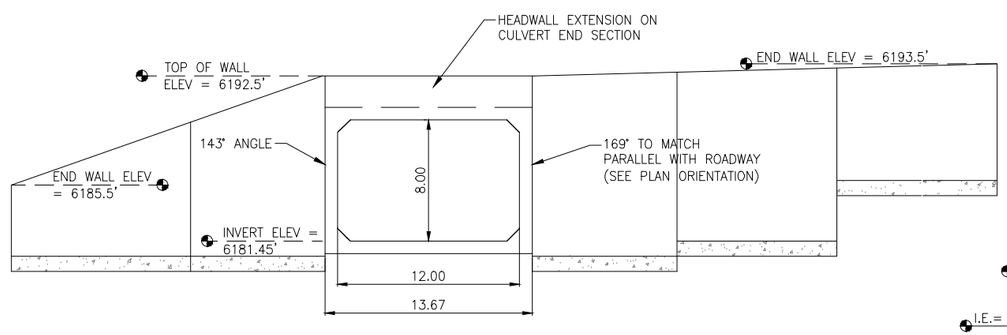

5 / 5.3 SOUTH END ELEVATION
Scale: 1"=10'

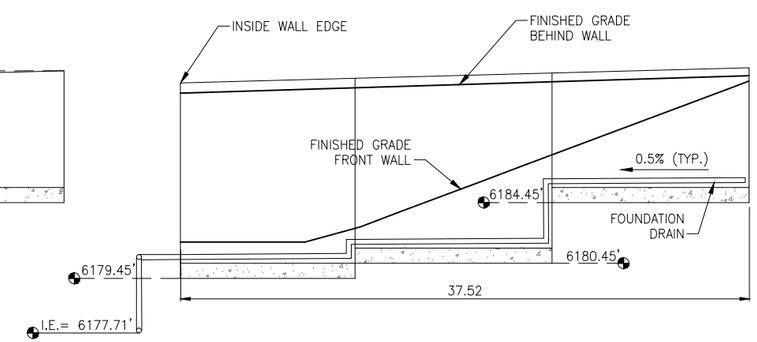

6 / 5.3 SOUTHEAST WING WALL
Scale: 1"=10'

0 5 10

JACKSON HOLE COMMUNITY PATHWAYS
PATH 22
JACKSON HOLE

NELSON ENGINEERING
P.O. BOX 1599, JACKSON WYOMING
(307) 733-2087

TETON COUNTY

TOWN OF JACKSON
WYOMING

DRAWING TITLE
HWY 22 UNDERPASS
END ELEVATIONS AND WING WALLS

REVISIONS

DRAWING NO 5.3
JOB NO 10-124-03
DATE 1/07/2015

S:\Proj2010\124-07 (Path22 Middle Segment)\Drawings\Design\V1-22 PATHWAY SKYLINE UNDERPASS.dwg (5.3 END ELEVATIONS) - Jan 07 2015 02:00:44 pm PLOTTED BY kurichner

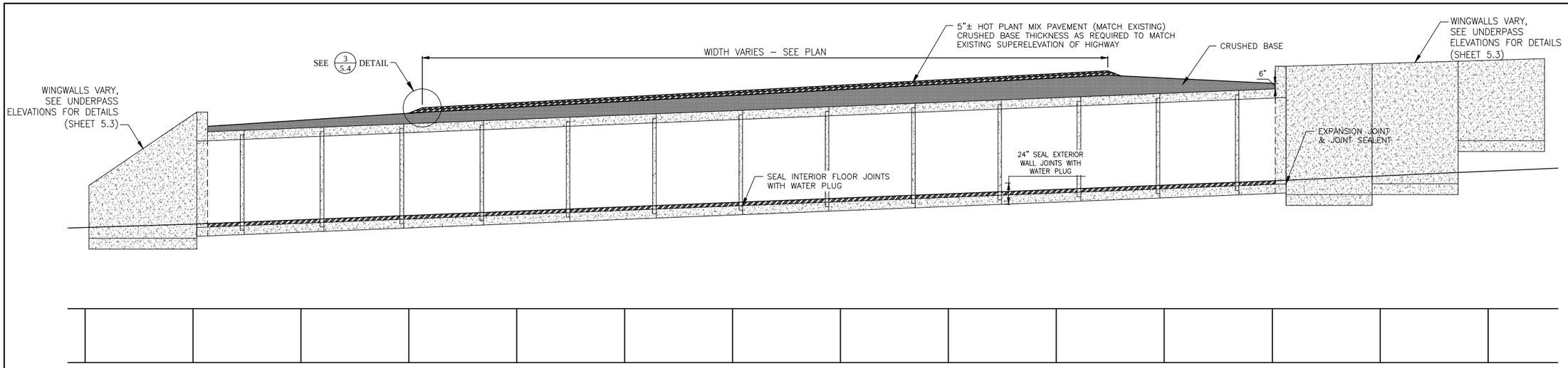

1/5.4 UNDERPASS SECTION VIEW

Scale: 1"= 5'

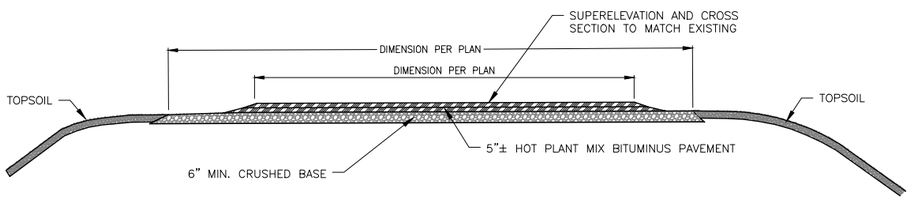

2/5.4 PAVING SECTION - NORTH AND SOUTH OF UNDERPASS

Scale: N.T.S.

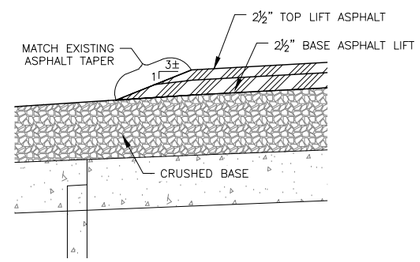

3/5.4 PAVING DETAIL

Scale: N.T.S.

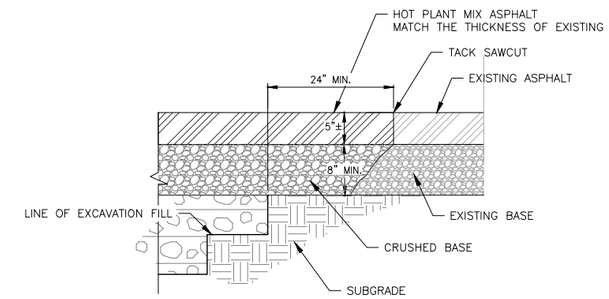

4/5.4 PAVING DETAIL

Scale: N.T.S.

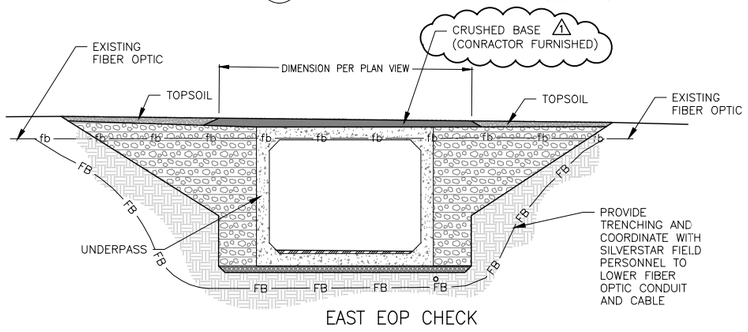

EAST EOP CHECK

6/5.1 EAST CROSS-SECTION VIEW

Scale: 1"=5'

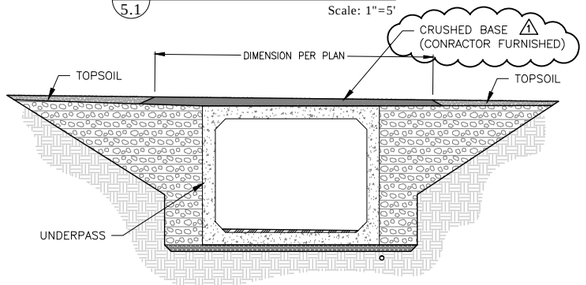

WEST EOP CHECK

7/5.1 WEST CROSS-SECTION VIEW

Scale: 1"=5'

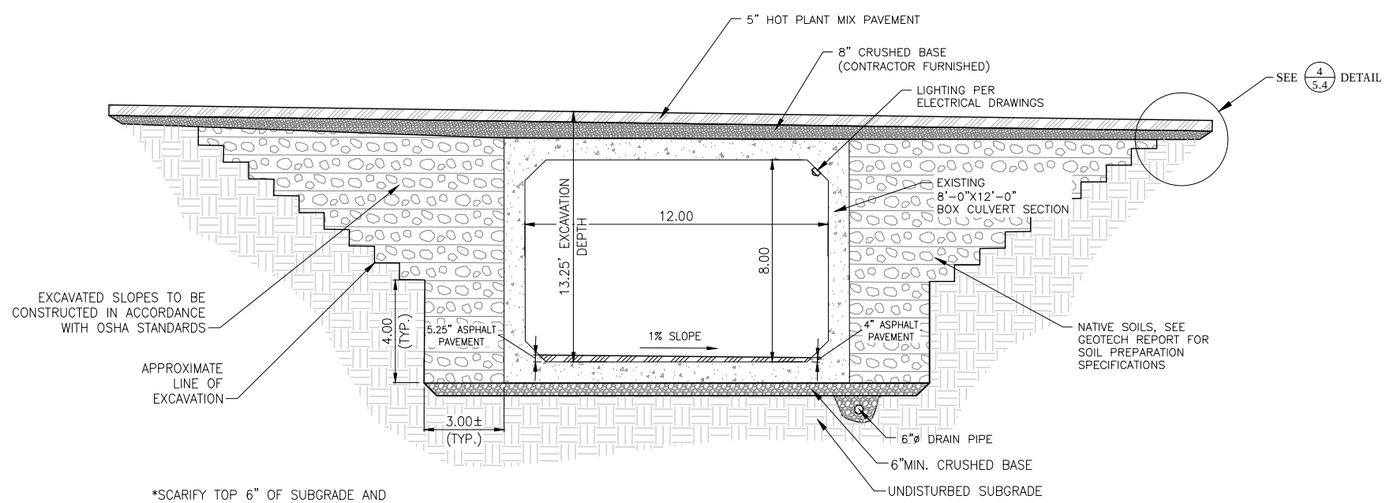

*SCARIFY TOP 6" OF SUBGRADE AND
RECOMPACT PER GEOTECH SPECIFICATIONS

5/5.4 UNDERPASS CROSS-SECTION

Scale: 1"= 3'

NELSON ENGINEERING
P.O. BOX 1599, JACKSON WYOMING
(307) 733-2087

DRAWING TITLE
HWY 22 UNDERPASS
SECTION VIEWS AND DETAILS

REVISIONS

DRAWING NO 5.4

JOB NO 10-124-03

DATE 1/07/2015

S:\Proj2010\124-07 Pathway Segment1\Drawings\Design\V1-22 PATHWAY SKYLINE UNDERPASS.dwg (5.4 UNDERPASS SECTIONS) - Jan 07 2015 02:02:14 pm PLOTTED BY: kurichner

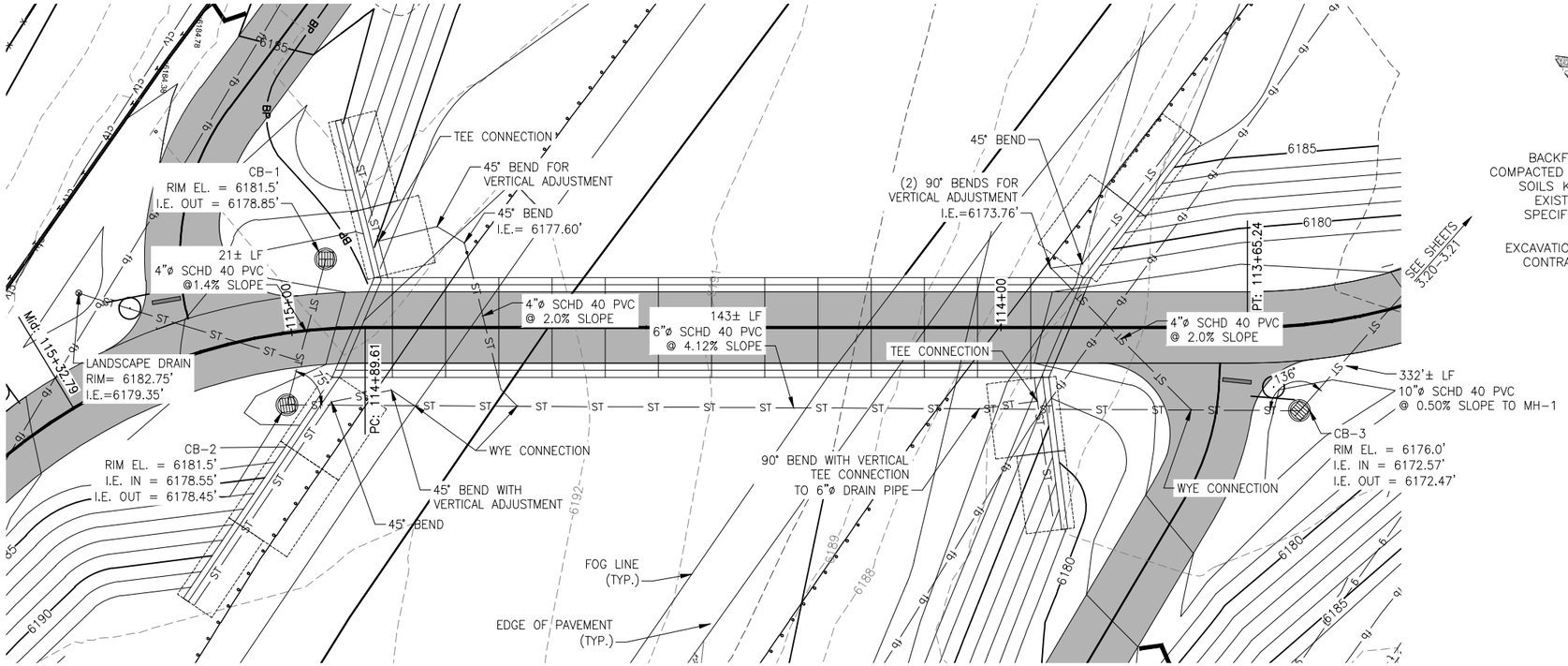

1/5.5 DRAIN SYSTEM LAYOUT
Scale: 1"= 20'

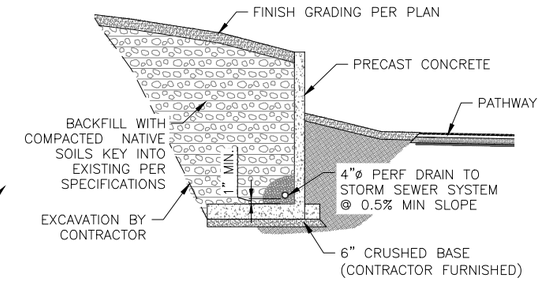

2/5.5 FOUNDATION DRAIN DETAIL
Scale: N.T.S.

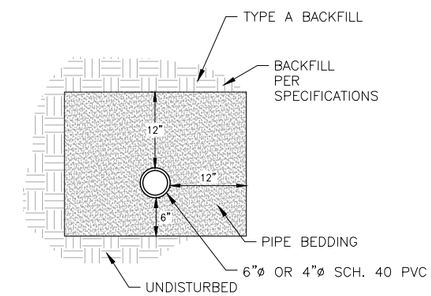

3/5.5 DRAIN PIPE TRENCH DETAIL
Scale: N.T.S.

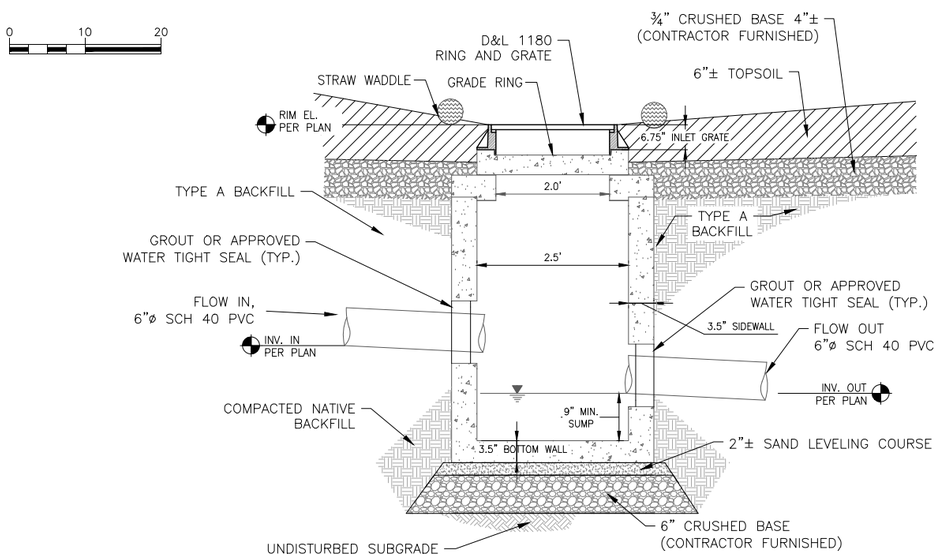

6/5.5 30" CATCH BASIN DETAIL
Scale: N.T.S.

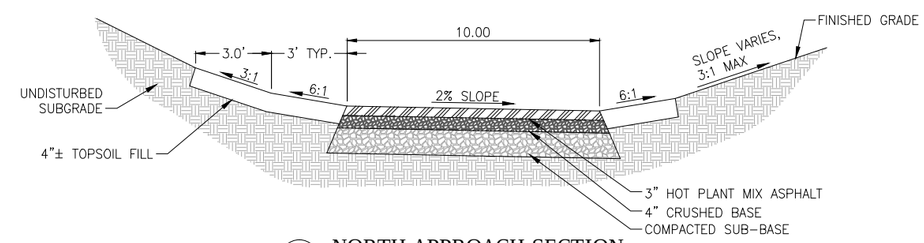

4/5.5 NORTH APPROACH SECTION
Scale: N.T.S.

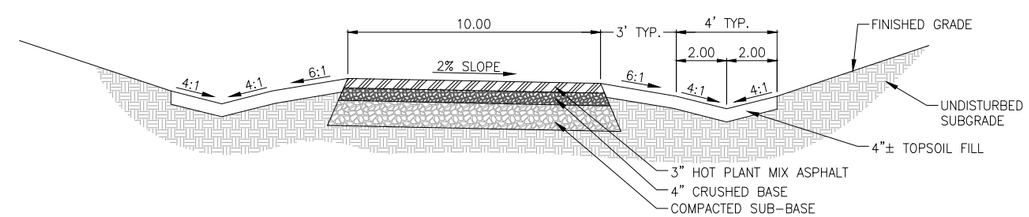

5/5.5 SOUTH APPROACH SECTION
Scale: N.T.S.

NELSON ENGINEERING
P.O. BOX 1599, JACKSON WYOMING
(307) 733-2087

DRAWING TITLE
HWY 22 UNDERPASS
DRAIN SYSTEM AND DETAILS

REVISIONS

DRAWING NO 5.5
JOB NO 10-124-03
DATE 1/07/2015

S:\Proj2010\124-07 (Path22 Middle Segment)\Drawings\Design\V1-22 PATHWAY SKYLINE UNDERPASS.dwg (5.5 DRAINAGE SYSTEM) - Jan 07 2015 02:03:06 pm PLOTTED BY: karlchner

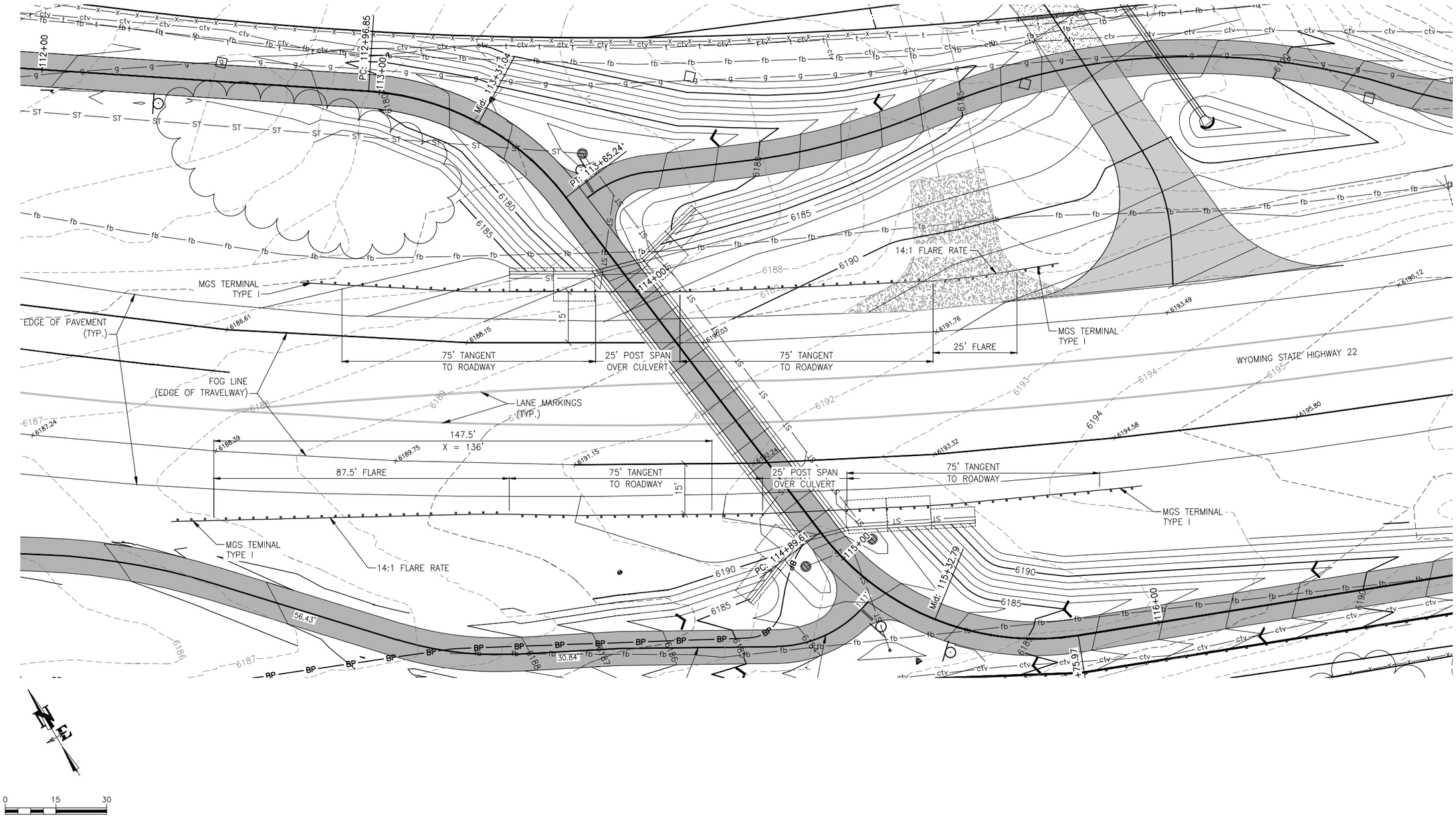

JACKSON HOLE COMMUNITY PATHWAYS
PATH 22

NELSON ENGINEERING
P.O. BOX 1599, JACKSON WYOMING
(307) 733-2087

TETON COUNTY

TOWN OF JACKSON

DRAWING TITLE
HIGHWAY 22 UNDERPASS
GUARDRAIL PLAN

REVISIONS

DRAWING NO 5.6
JOB NO 10-124-03
DATE 1/07/2015

S:\Proj2010\124-07 (Path22 Middle Segment)\Drawings\Design\V7-22 PATHWAY SKYLINE UNDERPASS.dwg (5.6 GUARDRAIL PLAN) - Jan 07 2015 02:43:51 pm PLOTTED BY: kurschner

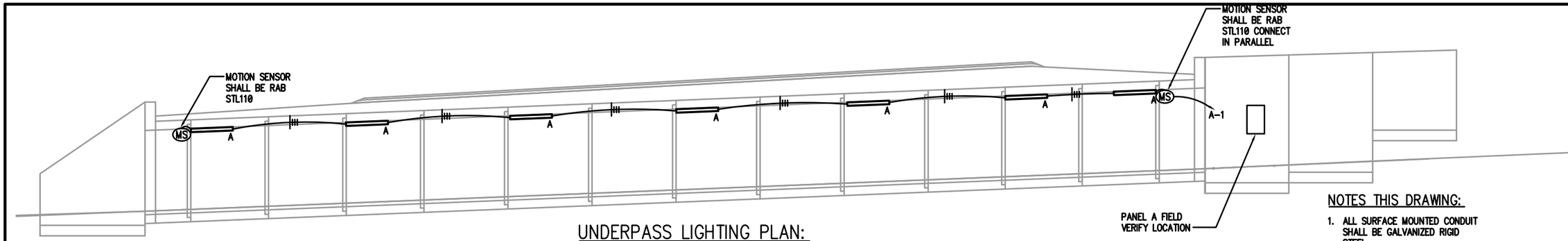

UNDERPASS LIGHTING PLAN:

SCALE: 1" = 10'-0"

NOTES THIS DRAWING:

1. ALL SURFACE MOUNTED CONDUIT SHALL BE GALVANIZED RIGID STEEL.

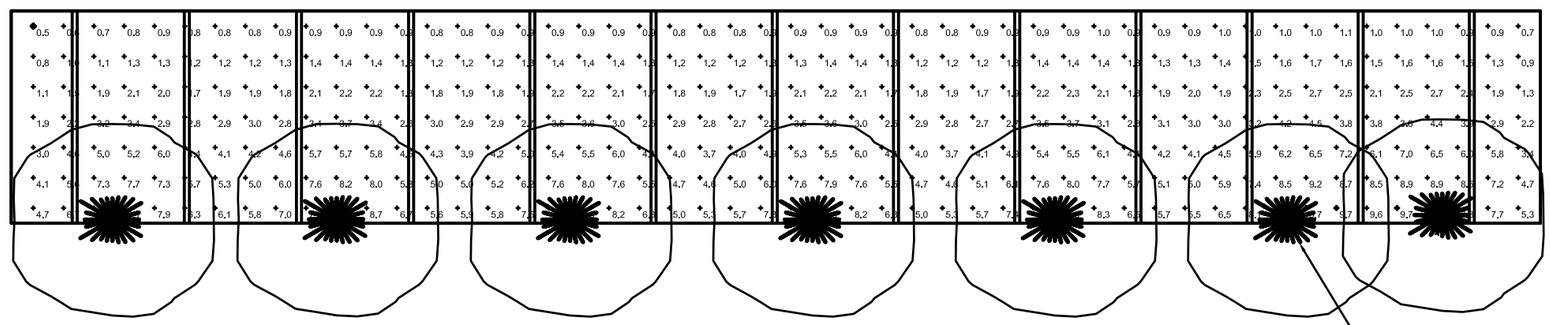

UNDERPASS LIGHTING PHOTOMETRIC PLAN:

SCALE: 1" = 10'-0"

LIGHTING MOUNTED TO PRECAST UNDERPASS CHAMFER. SEE DETAIL.

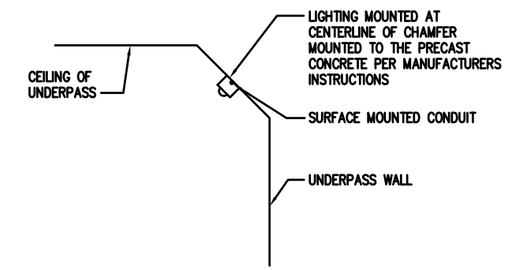

LIGHT MOUNTING DETAIL:

SCALE: NTS

FIXTURE SCHEDULE

SYMBOL	MANUFACTURER NAME	MANUFACTURER CAT. NO.	FIXT WATTS	LAMP TYPE	MOUNTING	REMARKS
A	KENNALL	N548-C-50-L-40K-DCC-1-DV	58	LED	SURFACE	120V VANDAL RESISTANT SURFACE MOUNT LIGHT
						LED, QTY 48, CREE XPE HEW
						4000 K

TABLE 250.66 FROM NEC

SIZE OF LARGEST UNGROUNDED SERVICE-ENTRANCE CONDUCTOR (AWG/KCMIL)	SIZE OF GROUNDING ELECTRODE CONDUCTOR (AWG/KCMIL)	MAX SERVICE SIZE
2 OR SMALLER	8	100A
1 OR 1/0	6	150A
2/0 OR 3/0	4	200A
OVER 3/0 THROUGH 350	2	300A
OVER 350 THROUGH 600	1/0	400A
OVER 600 THROUGH 1100	2/0	500A
OVER 1100	3/0	1000A

FOR OVER 1100 KCMIL ALSO REFER TO NEC PARAGRAPH 250.24(C)(1)
GROUNDED CONDUCTOR SHALL NOT BE SMALLER THAN 12-1/2% OF THE AREA OF THE LARGEST SERVICE CONDUCTOR

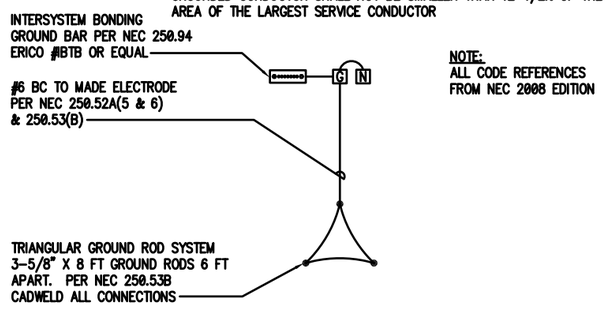

NOTE:
ALL CODE REFERENCES FROM NEC 2008 EDITION

GROUNDING SHALL BE COMPLETED TO ALL TYPES SHOWN

GROUNDING DETAIL

SCALE: NTS

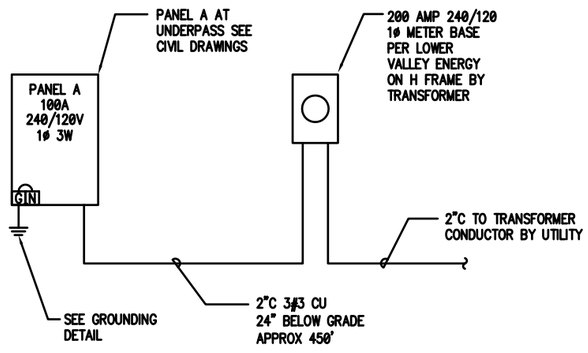

POWER RISER

SCALE: NTS

PANEL A

VOLTAGE: 240 / 120 V — DIMENSION: PER NEC — LOCATION: TUNNEL ENTRANCE
PANEL AMP RATING: 100A WITH 100A CB — MOUNTING: SURFACE — NEMA ENCLOSURE: 3R
WIRES: 3 PHASE: 1 FEED: TOP — TYPE: SQUARE D QO LOAD CENTER

LOAD DESCRIPTION	PH	LOAD WATT	BKR AMPS	CKT NO	LOAD A	LOAD B	CKT NO	BKR AMPS	LOAD WATT	PH	LOAD DESCRIPTION
LIGHTS	A	406	20	1	406		2			A	BLANK
SPARE	B		20	3		0	4			B	BLANK
SPARE	A			5	0		6			A	BLANK
BLANK	B			7		0	8			B	BLANK
BLANK	A			9	0		10			A	BLANK
BLANK	B			11		0	12			B	BLANK

FEEDER BREAKER	TOTAL LOAD PER PHASE-WATTS	406	0	FEED FROM: TRANSFORMER
RATING: 100A	TOTAL LOAD PER PHASE-AMPS	4	0	PANEL ISC RATING 10,000 AVAILABLE ISC
WIRE SIZE: 3#3 CU & 1#8 CU GND				CONDUIT SIZE: 1 1/4"C

Professional Engineering (Electrical) Kevin Nelson 17491 Registered WYOMING 12/17/2014

BEC
Bradley Engineering/Chtd.
Electrical Consulting & Design
382 Walnut Street
Idaho Falls, ID 83402
Tel: (208) 523-2862 Fax: (208) 523-2864
email: bec@bradleyengineering.com

JOB NUMBER: 14-78

PATH 22

NELSON ENGINEERING
P.O. BOX 1896, JACKSON WYOMING
(307) 733-8087

TETON COUNTY

TOWN OF JACKSON WYOMING

DRAWING TITLE: UNDERPASS LIGHTING PLAN, SCHEDULES AND RISERS

REVISIONS

DRAWING NO: E1.0
JOB NO: 10-124-07
DATE: 12/12/2014

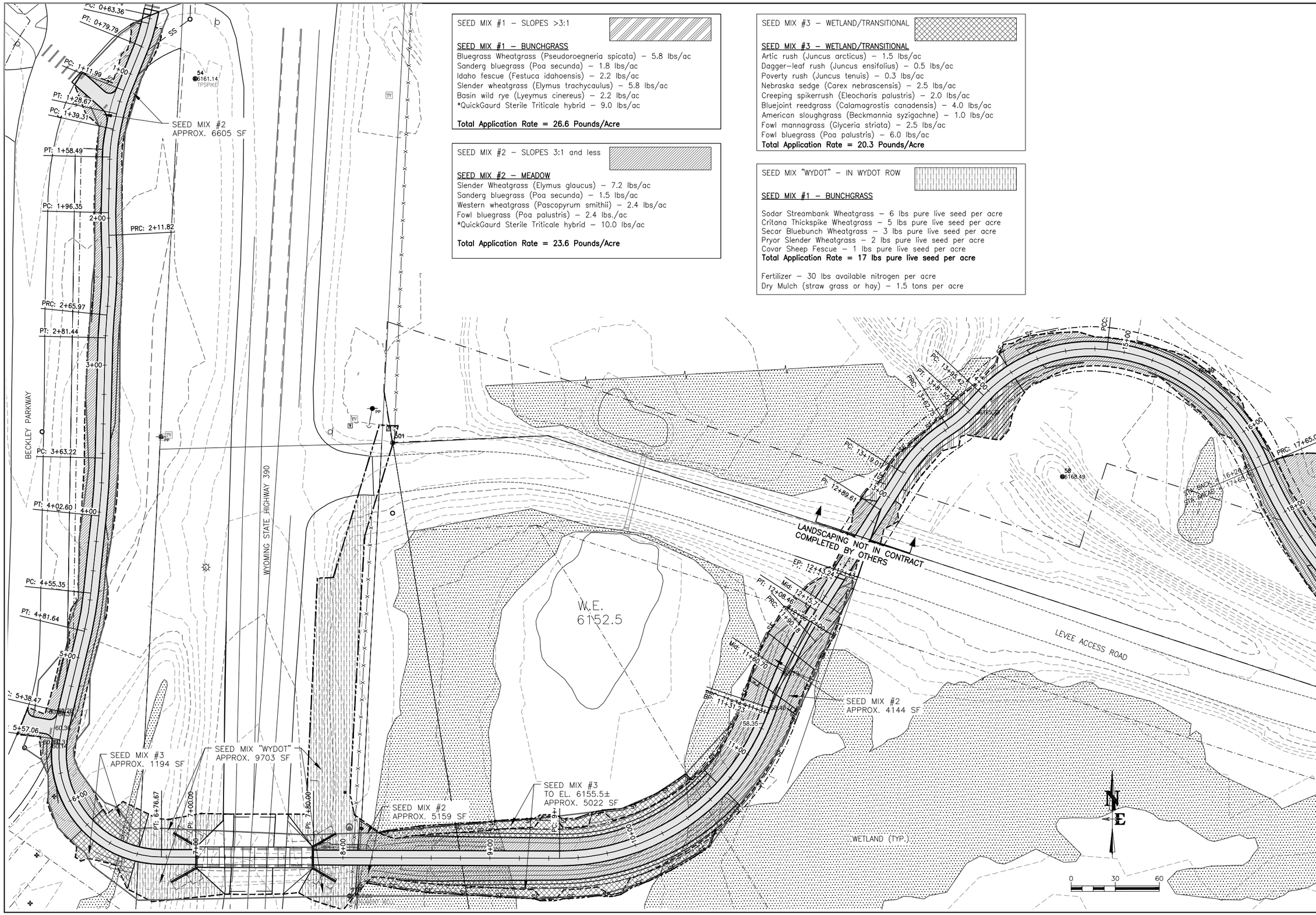

SEED MIX #1 – SLOPES >3:1

SEED MIX #1 – BUNCHGRASS
Bluegrass Wheatgrass (Pseudoroegneria spicata) – 5.8 lbs/ac
Sanderg bluegrass (Poa secunda) – 1.8 lbs/ac
Idaho fescue (Festuca idahoensis) – 2.2 lbs/ac
Slender wheatgrass (Elymus trachycaulus) – 5.8 lbs/ac
Basin wild rye (Lyeymus cinereus) – 2.2 lbs/ac
*QuickGaurd Sterile Triticale hybrid – 9.0 lbs/ac

Total Application Rate = 26.6 Pounds/Acre

SEED MIX #2 – SLOPES 3:1 and less

SEED MIX #2 – MEADOW
Slender Wheatgrass (Elymus glaucus) – 7.2 lbs/ac
Sanderg bluegrass (Poa secunda) – 1.5 lbs/ac
Western wheatgrass (Pascopyrum smithii) – 2.4 lbs/ac
Fowl bluegrass (Poa palustris) – 2.4 lbs./ac
*QuickGaurd Sterile Triticale hybrid – 10.0 lbs/ac

Total Application Rate = 23.6 Pounds/Acre

SEED MIX #3 – WETLAND/TRANSITIONAL

SEED MIX #3 – WETLAND/TRANSITIONAL
Artic rush (Juncus arcticus) – 1.5 lbs/ac
Dagger–leaf rush (Juncus ensifolius) – 0.5 lbs/ac
Poverty rush (Juncus tenuis) – 0.3 lbs/ac
Nebraska sedge (Carex nebrascensis) – 2.5 lbs/ac
Creeping spikerrush (Eleocharis palustris) – 2.0 lbs/ac
Bluejoint reedgrass (Calamagrostis canadensis) – 4.0 lbs/ac
American sloughgrass (Beckmannia syzigachne) – 1.0 lbs/ac
Fowl mannagrass (Glyceria striata) – 2.5 lbs/ac
Fowl bluegrass (Poa palustris) – 6.0 lbs/ac
Total Application Rate = 20.3 Pounds/Acre

SEED MIX "WYDOT" – IN WYDOT ROW

SEED MIX #1 – BUNCHGRASS

Sodar Streambank Wheatgrass – 6 lbs pure live seed per acre
Critana Thickspike Wheatgrass – 5 lbs pure live seed per acre
Secar Bluebunch Wheatgrass – 3 lbs pure live seed per acre
Pryor Slender Wheatgrass – 2 lbs pure live seed per acre
Covar Sheep Fescue – 1 lbs pure live seed per acre
Total Application Rate = 17 lbs pure live seed per acre

Fertilizer – 30 lbs available nitrogen per acre
Dry Mulch (straw grass or hay) – 1.5 tons per acre

JACKSON HOLE COMMUNITY PATHWAYS
PATH 22

NELSON ENGINEERING
P.O. BOX 1599, JACKSON WYOMING
(307) 733-2087

TETON COUNTY WYOMING

TOWN OF JACKSON WYOMING

DRAWING TITLE
LANDSCAPE PLANS
STA. 0+00 – 18+00

REVISIONS

DRAWING NO 6.0
JOB NO 10-124-03
DATE 1/07/2015

S:\Proj2010\124-07 (Path22 Middle Segment)\Drawings\Pathway West\Layouts\Landscape Schedule.dwg (6.1) - Jan 07 2015 02:06:12 pm PLOTTED BY: karichner

DRAWING NO	REVISIONS	DRAWING TITLE
6.1		LANDSCAPE PLAN
JOB NO		STA. 18+00 – 26+00
10-124-03		
DATE		
1/07/2015		

TETON COUNTY WYOMING

NELSON ENGINEERING
P.O. BOX 1599, JACKSON WYOMING
(307) 733-2087

PATH 22

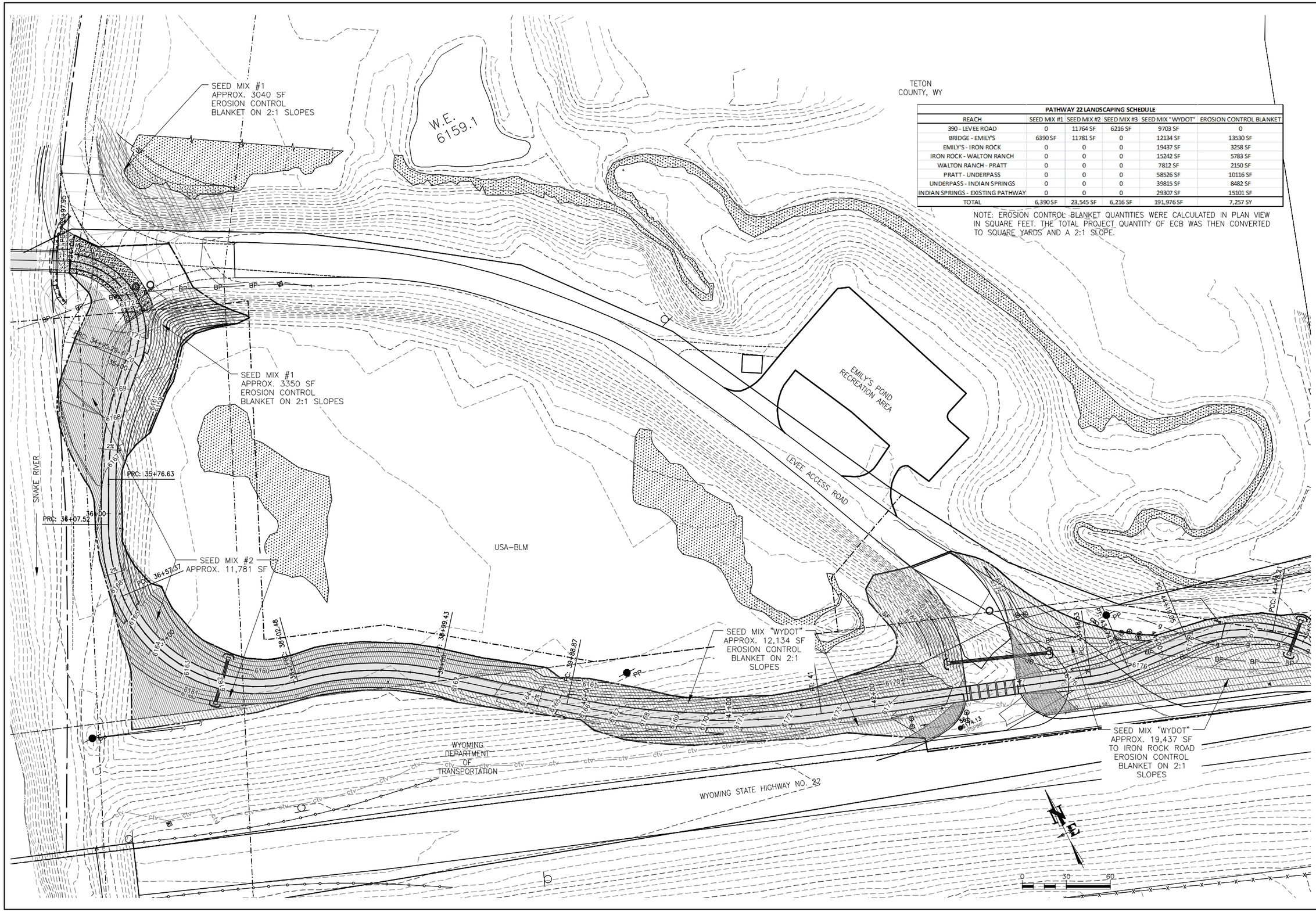

PATHWAY 22 LANDSCAPING SCHEDULE					
REACH	SEED MIX #1	SEED MIX #2	SEED MIX #3	SEED MIX "WYDOT"	EROSION CONTROL BLANKET
390 - LEVEE ROAD	0	11764 SF	6216 SF	9703 SF	0
BRIDGE - EMILY'S	6390 SF	11781 SF	0	12134 SF	13530 SF
EMILY'S - IRON ROCK	0	0	0	19437 SF	3258 SF
IRON ROCK - WALTON RANCH	0	0	0	15242 SF	5783 SF
WALTON RANCH - PRATT	0	0	0	7812 SF	2150 SF
PRATT - UNDERPASS	0	0	0	58526 SF	10116 SF
UNDERPASS - INDIAN SPRINGS	0	0	0	39815 SF	8482 SF
INDIAN SPRINGS - EXISTING PATHWAY	0	0	0	29307 SF	15101 SF
TOTAL	6,390 SF	23,545 SF	6,216 SF	191,976 SF	7,257 SY

NOTE: EROSION CONTROL BLANKET QUANTITIES WERE CALCULATED IN PLAN VIEW IN SQUARE FEET. THE TOTAL PROJECT QUANTITY OF ECB WAS THEN CONVERTED TO SQUARE YARDS AND A 2:1 SLOPE.

JACKSON HOLE COMMUNITY PATHWAYS
PATH 22

NELSON ENGINEERING
P.O. BOX 1599, JACKSON WYOMING
(307) 733-2087

TETON COUNTY WYOMING

TOWN OF JACKSON WYOMING

DRAWING TITLE
LANDSCAPE PLAN
STA. 34+00 - 44+00

REVISIONS

DRAWING NO 6.2
JOB NO 10-124-03
DATE 1/07/2015

PATH22 - MITIGATION

LOT 1 - STILSON PARK SUBDIVISION
TETON COUNTY, WYOMING

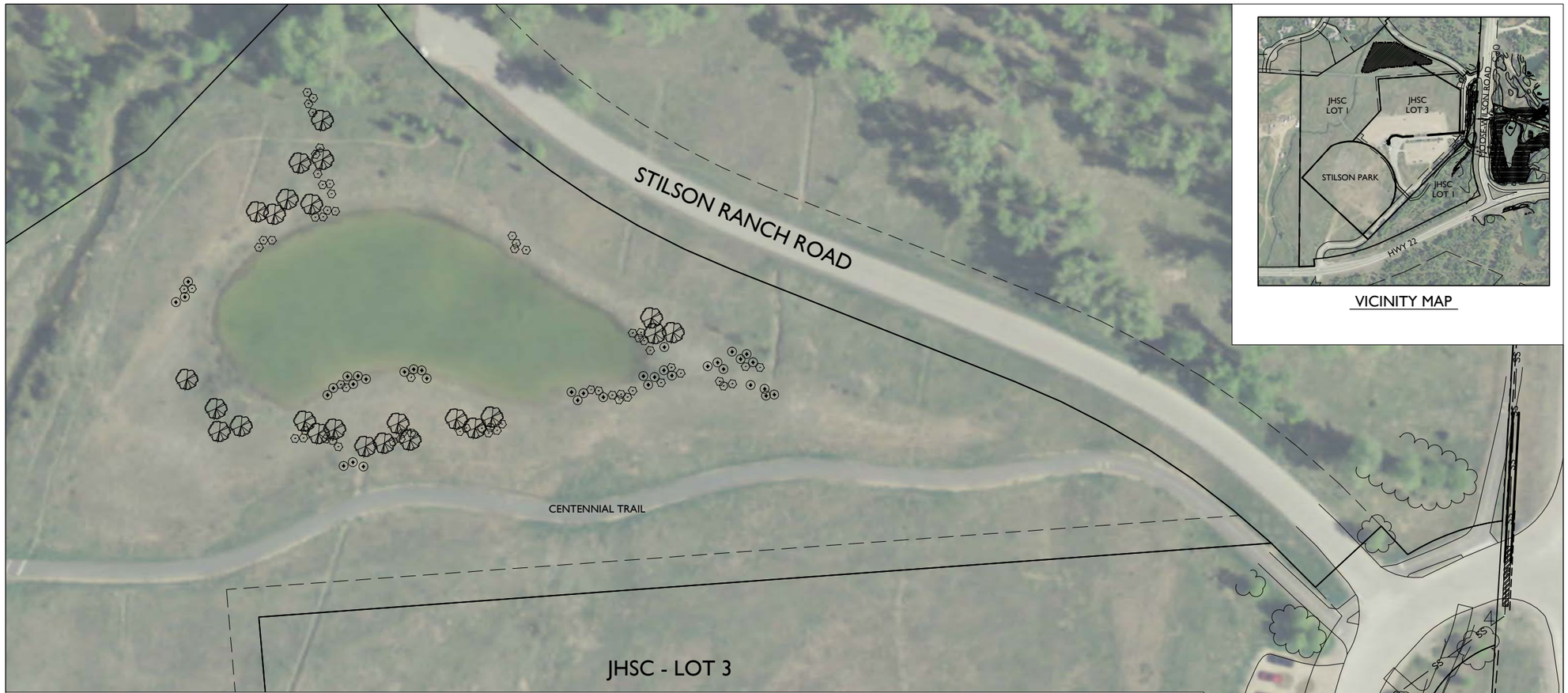

VICINITY MAP

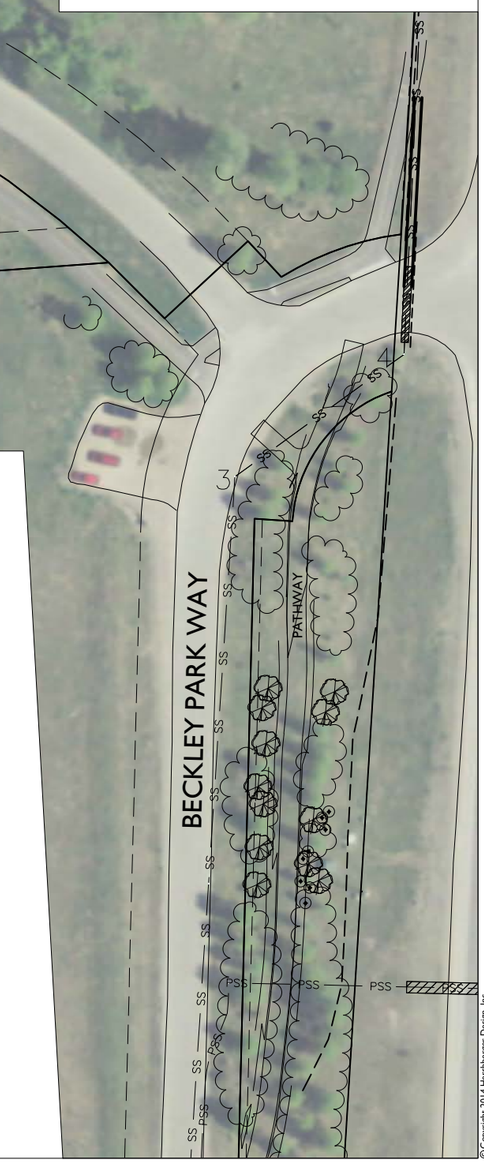

PLANT LIST

SYMBOL	BOTANICAL NAME	COMMON NAME	SIZE	QTY.	NOTE
DECIDUOUS TREE:					
	Populus angustifolia	Narrowleaf Cottonwood	2"-2.5" CAL	36	b+b
SHRUB:					
	Cornus sericea	Red Twig Dogwood	5 GAL	63	
	Salix sp.	Native Willow	5 GAL	45	
NATIVE GRASS SEED:					

Fresh, clean, and dry new seed, of mixed species to match Meadow Blend Sod, as follows:

26% Intermediate Wheatgrass	16.75% Creeping Red Fescue
16.75% Perennial Ryegrass	11.7% Manchar Smooth Brome
11.7% Sheep Fescue	12.18% Sodar Streambank Wheatgrass
5.16% Crested Wheatgrass	(no Great Basin Wild Rye)

Aplication Rate: 30 lbs per acre

PLANTING NOTES

1. Refer to available utility and grading plans. If site conditions vary from what is shown, contact the landscape architect for direction before proceeding.

2. Verify locations and timing of site improvements. If any part of the work cannot be completed due to site conditions, contact the landscape architect.

3. Excavation near underground utilities shall be done carefully and, if necessary, by hand. The contractor is fully responsible for this work and any disruption to utilities or damage to the site and/or improvements shall be repaired immediately at no expense to the owner.

4. Confirm all plant counts and square footages: quantities shown are provided as owner information only. If quantities indicated in the plant list differ from symbols shown on the plans, then the plans shall govern the plant count.

5. The landscape architect shall review all plant materials at the source or nursery (if within 50 miles of site) - or by photographs - prior to digging trees or shipping plant materials. The landscape architect reserves the right to reject any unacceptable plant material either at the source or when delivered to the project site.

6. Carefully align and space plant materials as indicated in these notes, drawings and details. Adjust locations of proposed plant material to preserve existing vegetation on site. The final location of plant materials is to be approved by the landscape architect on site prior to installation. The contractor is responsible for staking or marking the location of all plant materials on site for review by the landscape architect. The landscape architect reserves the right to adjust the exact locations of plants on site.

7. All plants shall be planted at the same level with relation to finish grade as they were grown in the field or nursery.

8. Do not perform any pruning of existing or newly planted trees or shrubs without the direction and approval of the landscape architect.

9. Provide burlap wrap or other approved trunk protection for all new trees.

10. For ball & burlap trees, remove burlap from top 1/3 of rootball once trees are fully planted, unless directed otherwise by nursery.

11. The landscape architect shall review and reserves the right to reject the method and/or installation of tree staking and guying systems prior to acceptance.

12. Reclaim all areas disturbed by contractor using native seed mix. Replace existing native grasses around rootballs of newly planted material.

13. Limit disturbance to a minimum. Excessive disturbance as determined by landscape architect shall be restored to native condition at no expense to the owner.

14. Provide wire mesh fencing around planting areas to protect from wildlife browse during establishment. Remove Spring 2017.

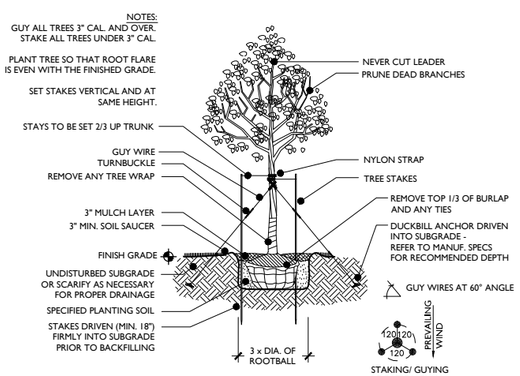

1 Deciduous Tree Planting
1/4"= 1'-0" A

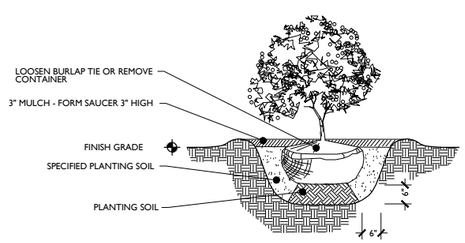

2 Shrub Planting
1/2"= 1'-0" B

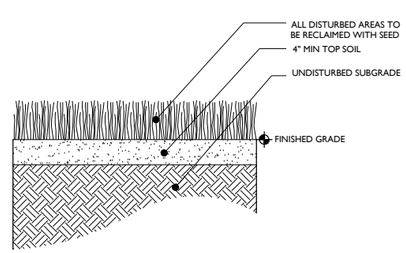

3 Seed Planting
1"= 1'-0" C

HERSHBERGER DESIGN
Landscape Architecture · Environmental Planning · Urban Design
560 South Glenwood P.O. Box 1648 Jackson, Wyoming 83001 T.307.739.1001 F.307.734.8322

Issue Date:
· 27 MAY 2014
· 21 JULY 2014
· 11 AUG. 2014
· 22 AUG. 2014
·
·
·

Drawing Title:
PLANTING PLAN

Drawing Number:
L1.0

N

Scale:
0 20 40 80 120 160 200
1"=40'-0"

© Copyright 2014 Hershberger Design, Inc.

© Copyright, 2014 Hershberger Design, Inc.

PATH22 - MITIGATION

LOT 1 - STILSON PARK SUBDIVISION
TETON COUNTY, WYOMING

IRRIGATION LEGEND

SYMBOL	DESCRIPTION
◆	Estimated Existing Controller Location
○	Approximate Point of Connection to Existing Irrigation Mainline
●	Approximate Location of Existing Wellhead
— — —	Estimated Existing Irrigation Mainline Location
———	Estimated Path of Proposed Irrigation Trenching and Disturbance
= = = = = =	Estimated Location of Proposed Sleeving

IRRIGATION NOTES

1. The irrigation system shall be operational prior to plant installation, or temporary irrigation measures shall be provided in the interim. The method of temporary irrigation shall be approved by the landscape architect prior to installing any plant material.
2. The permanent irrigation system shall be a design-build amendment to the existing irrigation system on JHSC property. Initial site assumptions to be made for bid subtitle:

Controller:	Hunter ICC. Located on NE side of bus sop building. Assume existing controller has capacity to expand to accommodate proposed zone(s).
Control Wire:	Assume new control wire will be necessary to accommodate proposed zone(s)
Pump:	1 hp or 1 ½ hp submersible well pump providing approximately 16 gpm @ 40-60 psi. Assume existing pump is adequate for proposed zone(s).
Main Line:	Assume 2" PVC. Connect to irrigation mainline in location shown on plan.

3. Contractor must verify actual existing site conditions prior to design of proposed irrigation system. Any modifications to the bid assumptions shall be identified prior to final irrigation design acceptance.
4. Trenching disturbances shall be no greater than 12" wide along the length of trench. Disturbance shall be re-vegitated with native seed mix (L1.0).
4. All trees and installed shrubs to be drip irrigated. Re-vegitation areas associated with trenching activities do not require supplemental irrigation.
5. Sleeve under existing pathway may be cut and patched or bored.
6. Installation of seed shall be no earlier than September 30th and no later than snow cover.

HERSHBERGER DESIGN
Landscape Architecture · Environmental Planning · Urban Design
560 South Glenwood P.O. Box 1648 Jackson, Wyoming 83001 T:307.739.1001 F:307.734.8322

Issue Date:
- 27 MAY 2014
- 21 JULY 2014
- 11 AUG. 2014
- 22 AUG. 2014
-
-
-

Drawing Title:

IRRIGATION NOTES

Drawing Number:

L1.1

N

Scale:
0 25 50 100 150 200 250
1"=50'-0"

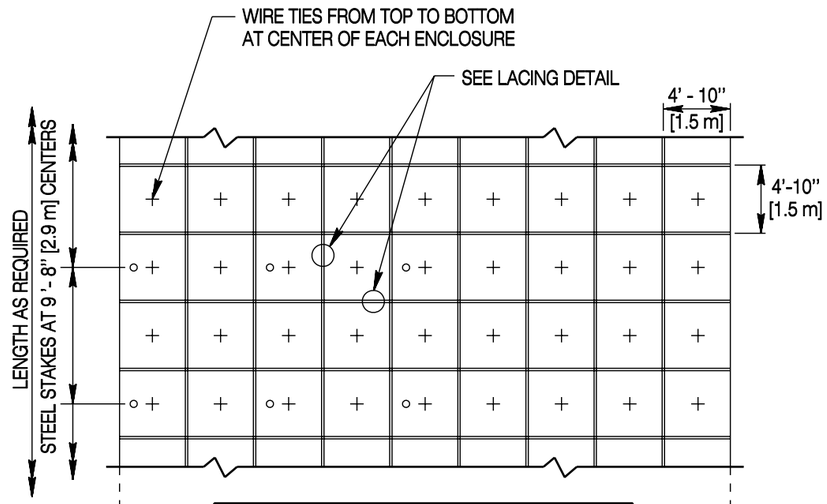

TYPICAL PLAN NORMAL TO SLOPE (FOR CHANNELS)

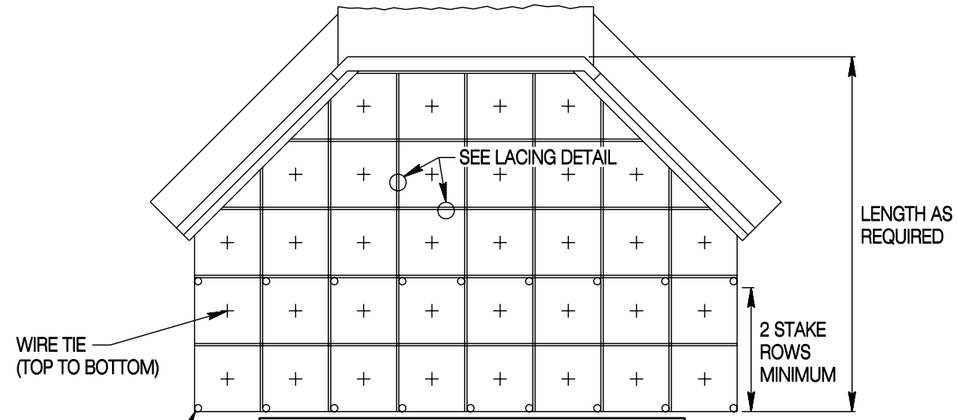

TYPICAL PLAN (FOR RC CULVERTS)

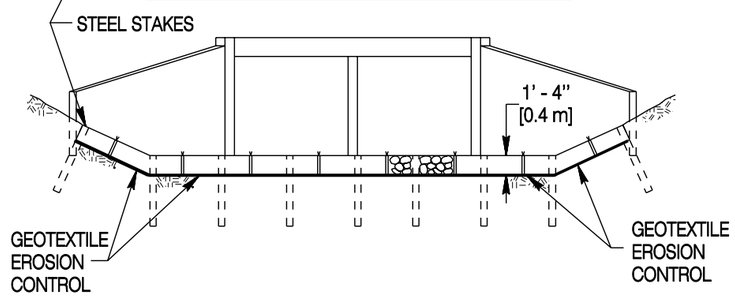

TYPICAL SECTION (FOR RC CULVERTS)

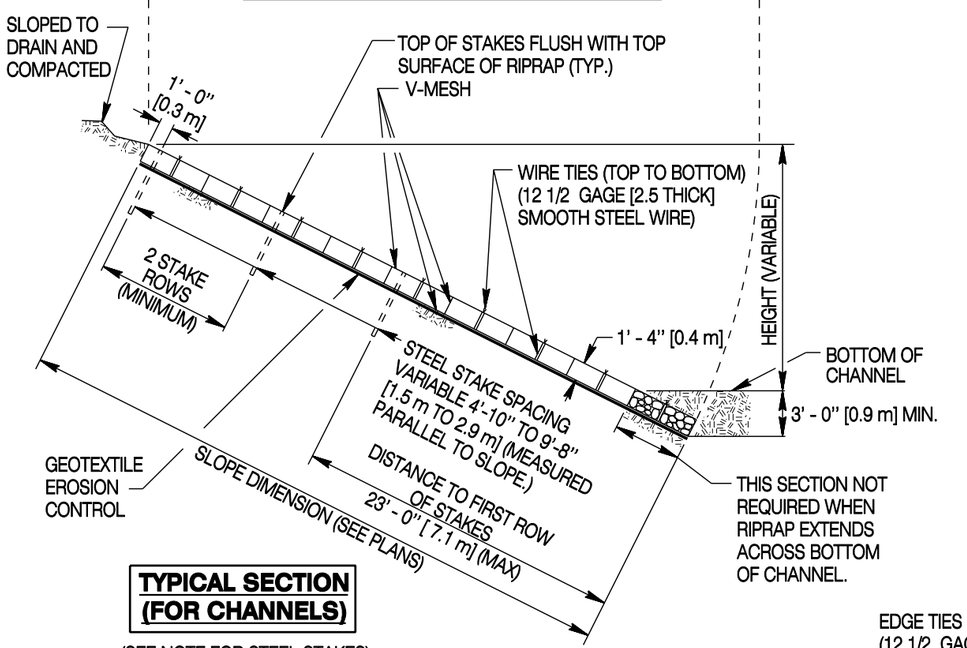

TYPICAL SECTION (FOR CHANNELS)

(SEE NOTE FOR STEEL STAKES)

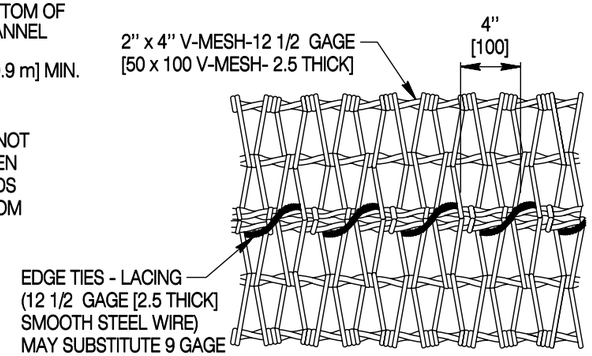

LACING DETAIL FOR WIRE ENCLOSED RIPRAP

General Notes For Wire Enclosed Riprap

Steel Stakes

Use stakes on slopes that are 1V:2H and steeper.

Placement of stakes may vary with site conditions - place stakes as approved by the engineer.

V-Mesh

Use alternate mesh only with the approval of the engineer.

Lacing For Wire Enclosed Riprap

Lace edges and corners of wire mesh together.

Estimated Riprap Quantities

Estimate 0.444 CY [0.400 m^3] of riprap for 1 SY [1 m^2] surface area.

Geotextile Erosion Control (Fabric)

Place Geotextile erosion control under entire surface area of riprap.

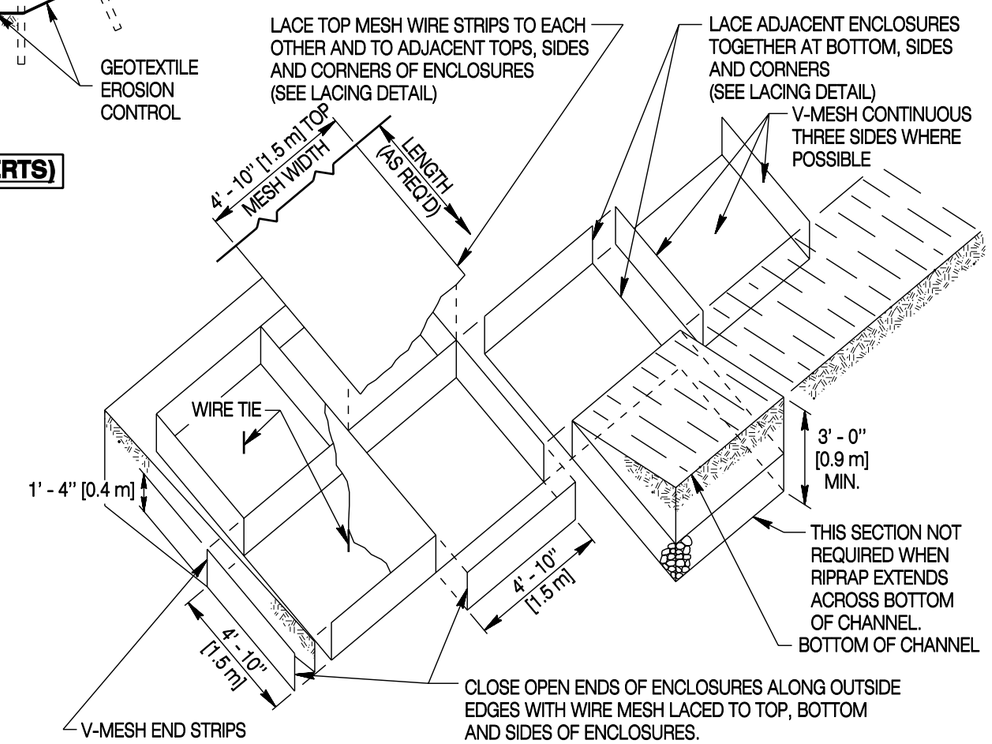

EXPANDED VIEW

Designed by: CRR	WIRE ENCLOSED RIPRAP DETAILS
Drawn by: GLD	
Checked by: WBW	
Previous Dwg. No. 511-1	

Note: Units shown in brackets [ ] are metric and are in millimeters (mm) unless other units are shown.

WYOMING DEPARTMENT OF TRANSPORTATION

WIRE ENCLOSED RIPRAP AND GABIONS

STANDARD PLAN

STANDARD PLAN NUMBER **511-1A**

SHEET 1 of 3

Issued by: ENGINEERING SERVICES

Date Issued: DECEMBER 2006

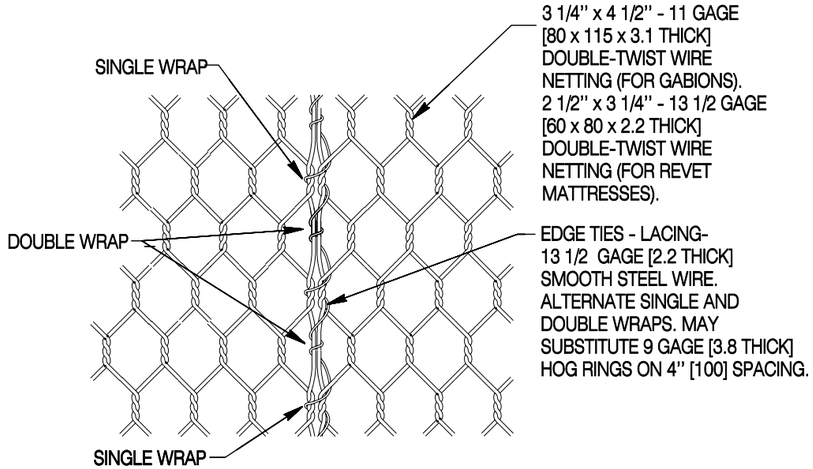

LACING DETAIL FOR GABIONS AND REVET MATTRESSES

STAKE SPACING TABLE				
SLOPE	SPACING			
	ACROSS		DOWN	
	FT	m	FT	m
1V:2H	6	1.8	8	2.4
1V:2.5H	6	1.8	8	2.4
1V:3H	12	3.6	12	3.6
1V:4H	12	3.6	12	3.6
1V:5H	12	3.6	12	3.6
1V:6H	NONE		NONE	

NOTE: PLACE STAKES NEAR CONNECTIONS OF UNITS WHEN POSSIBLE. USE STRAIGHT STAKES AND DO NOT WIRE TO THE BASKET. SEE GENERAL NOTES, SHEET 1.

STAKE LENGTH
CLAY SOIL - 4 ft. [1.2 m] SANDY SOIL - 6 ft. [1.8 m]

STANDARD REVET MATTRESS SIZES					
R x S x T		NO. OF CELLS (EACH UNIT)	UNIT CAPACITY		VOLUME PER SURFACE AREA
FT x FT x FT	m x m x m		CY	m^3	
9 x 6 x .75	2.7 x 1.8 x 0.23	3	1.5	1.1	0.028 CY/ft²
12 x 6 x .75	3.6 x 1.8 x 0.23	4	2.0	1.5	0.23 m³/m²

STANDARD GABION SIZES					
R x S x T		NO. OF CELLS (EACH UNIT)	UNIT CAPACITY		VOLUME PER SURFACE AREA
FT x FT x FT	m x m x m		CY	m^3	
6 x 3 x 3	1.8 x 0.9 x 0.9	2	2.0	1.5	0.11 CY/ft² 0.9 m³/m²
9 x 3 x 3	2.7 x 0.9 x 0.9	3	3.0	2.3	
12 x 3 x 3	3.6 x 0.9 x 0.9	4	4.0	3.1	
6 x 3 x 1.5	1.8 x 0.9 x 0.45	2	1.0	0.8	0.056 CY/ft² 0.45 m³/m²
9 x 3 x 1.5	2.7 x 0.9 x 0.45	3	1.5	1.1	
12 x 3 x 1.5	3.6 x 0.9 x 0.45	4	2.0	1.5	
6 x 3 x 1	1.8 x 0.9 x 0.3	2	0.7	0.5	0.037 CY/ft² 0.30 m³/m²
9 x 3 x 1	2.7 x 0.9 x 0.3	3	1.0	0.8	
12 x 3 x 1	3.6 x 0.9 x 0.3	4	1.3	1.0	

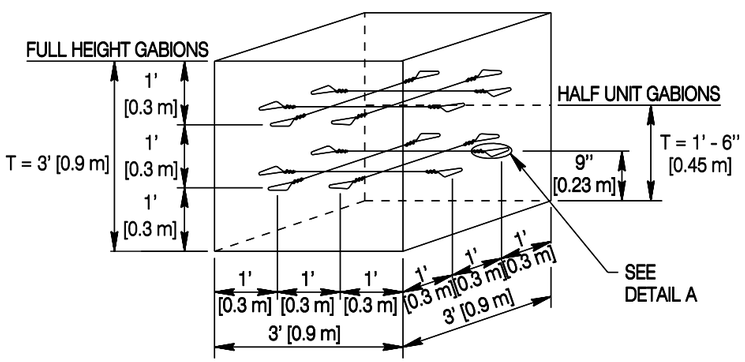

HALF HEIGHT AND FULL HEIGHT GABION CELL HORIZONTAL STIFFENER WIRE REQUIREMENTS

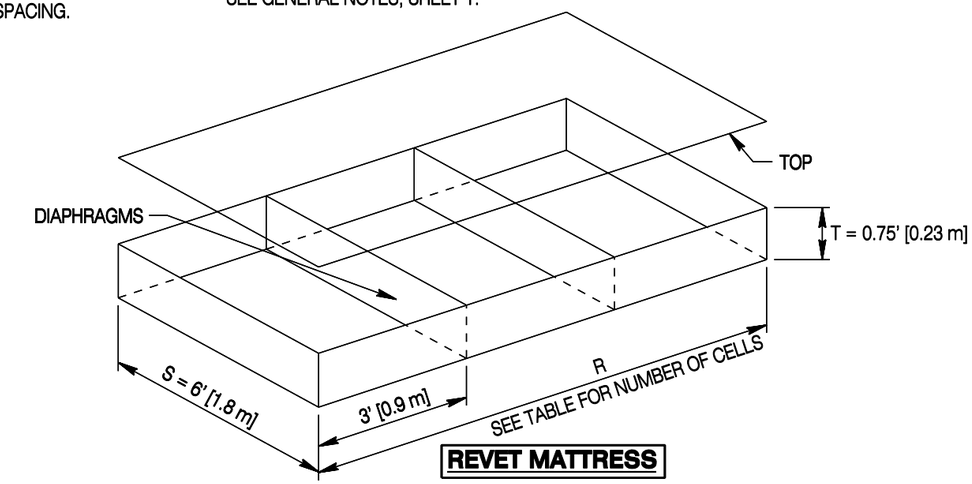

REVET MATTRESS

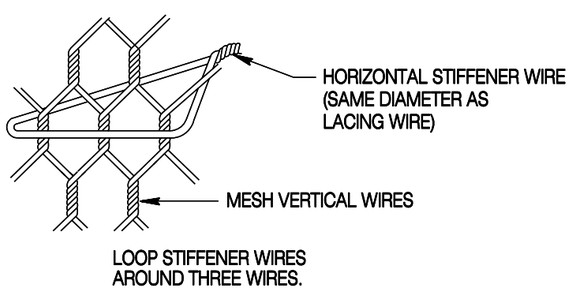

DETAIL A HORIZONTAL STIFFENER WIRE CONNECTION

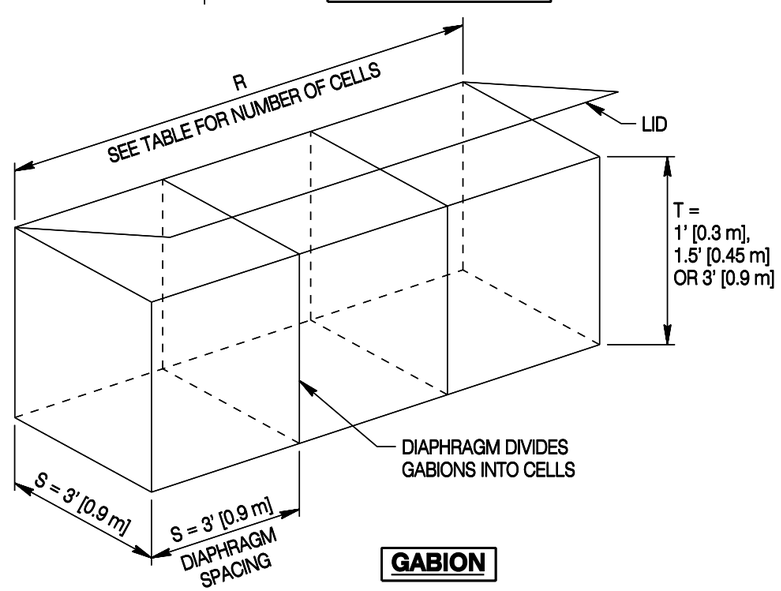

GABION

Gabion and Revet Mattress Construction

Place riprap in gabions in lifts not to exceed 1 ft. [0.3 m] or the height of each horizontal stiffener wire level, whichever is less. Install horizontal tie wires and proceed to the next lift. Continue until gabions are full. Lace lid or top to sides and diaphragms and tie to other units.

1 ft. [0.3 m] Gabions and Revet mattresses do not require horizontal stiffener wires.

Designed by: CRR	GABION AND REVET MATTRESS DETAILS
Drawn by: GLD	
Checked by: WBW	
Previous Dwg. No. 511-1	

Note: Units shown in brackets [ ] are metric and are in millimeters (mm) unless other units are shown.

WYOMING DEPARTMENT OF TRANSPORTATION

WIRE ENCLOSED RIPRAP AND GABIONS

STANDARD PLAN

STANDARD PLAN NUMBER **511-1A**

SHEET 2 of 3

Issued by: ENGINEERING SERVICES

Date Issued: DECEMBER, 2006

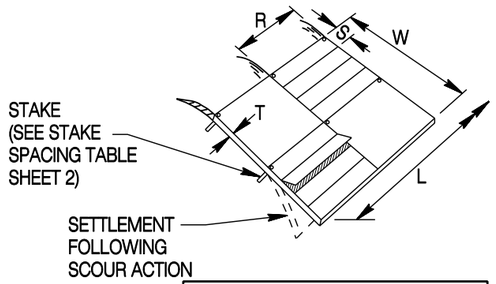

SIDE SLOPE TREATMENT

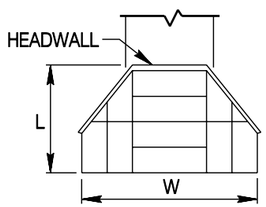

CULVERT

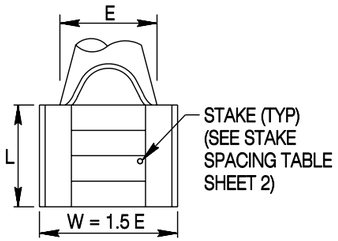

FLARED END SECTION

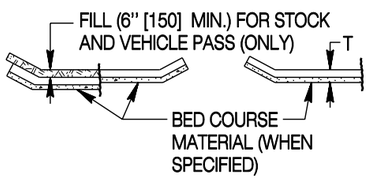

OUTLET TREATMENT

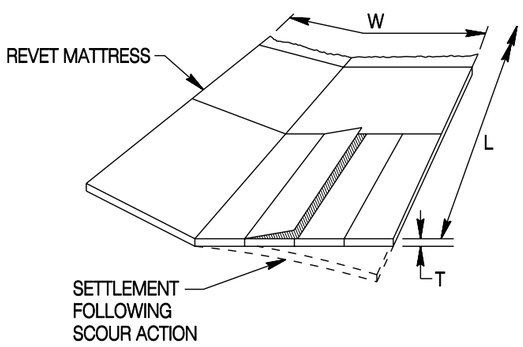

SCOUR APRON

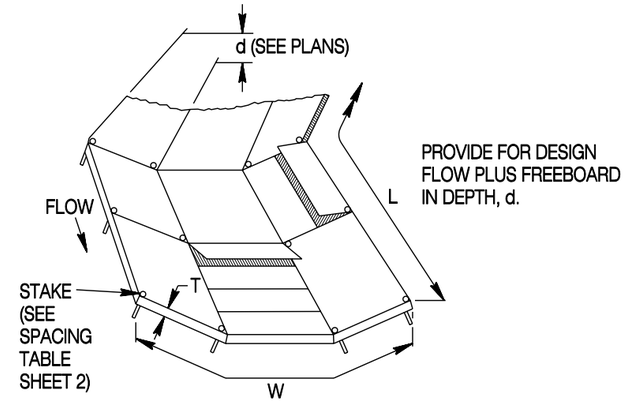

LINED CHANNEL

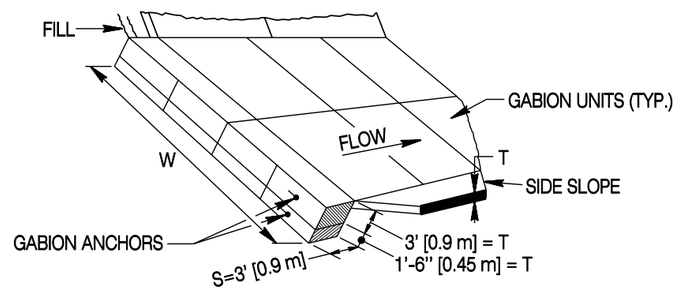

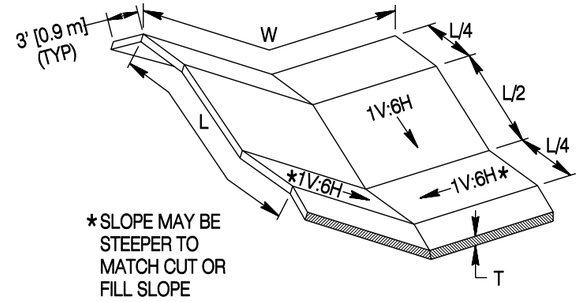

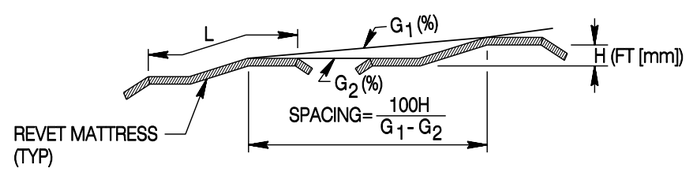

BORROW DITCH CHECK

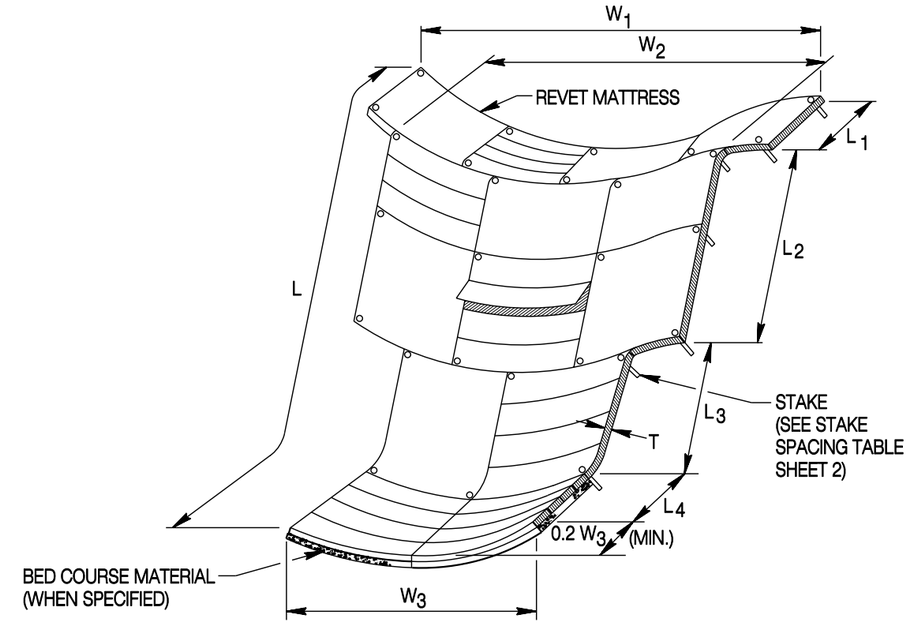

CHANNEL DROP

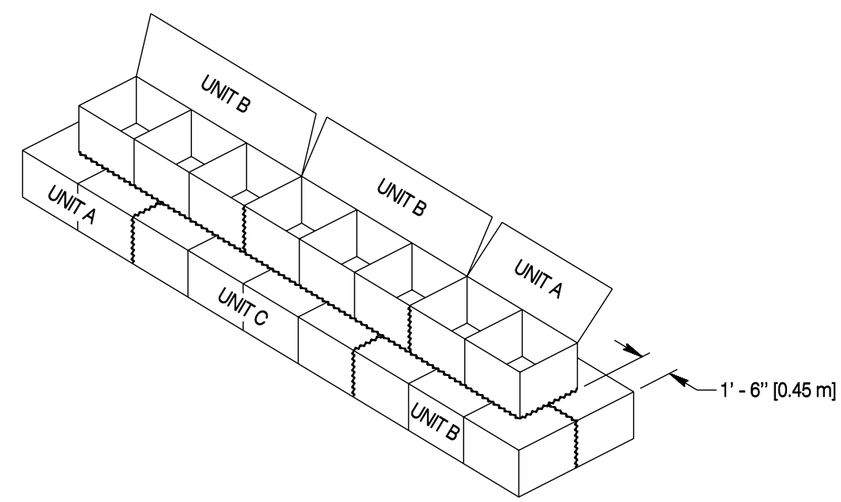

PLACING AND FASTENING ADJACENT BASKETS

Designed by: CRR Drawn by: GLD Checked by: WBW Previous Dwg. No. 511-1	GABION AND REVET MATTRESS DETAILS	WYOMING DEPARTMENT OF TRANSPORTATION	WIRE ENCLOSED RIPRAP AND GABIONS STANDARD PLAN	STANDARD PLAN NUMBER 511-1A SHEET 3 of 3 Issued by: ENGINEERING SERVICES Date Issued: DECEMBER, 2006

Note: Units shown in brackets [ ] are metric and are in millimeters (mm) unless other units are shown.

MGS GUARDRAIL STANDARD PLAN
INDEX OF SHEETS

SHEET	TOPIC
	LAYOUT DETAILS
1	General Requirements
2	Guardrail Placement Around Fixed Object Hazards
3	Grading Requirements
4	Grading Requirements (continued)
	INSTALLATION DETAILS
5	Standard Run of MGS Guardrail
6	Transition A - to TL-3 Steel Bridge Rail
7	Transition B - to TL-4 Steel Bridge Rail
8	Transition C - To New Jersey Concrete Barrier
9	Transition D - To Single Slope Concrete Barrier
10	Terminal Type I (Option 1 - SKT MGS, Sheet 1 of 2)
11	Terminal Type I (Option 1 - SKT MGS, Sheet 2 of 2)
12	Terminal Type I (Option 2 - ET-31, Sheet 1 of 2)
13	Terminal Type I (Option 2 - ET-31, Sheet 2 of 2)
14	Terminal Type II (Option 1 - FLEAT MGS, Sheet 1 of 2)
15	Terminal Type II (Option 1 - FLEAT MGS, Sheet 2 of 2)
16	MGS Long Span
17	MGS Half Post Spacing
	MGS Quarter Post Spacing
	MGS Long Post - Constricted Slope Grading
	MGS 8" [205] Blocks
18	Post Placement in Pavements and Rock

Initiating a straight guardrail flare - Initiate a 1W:15L guardrail flare (typical for high speed roadways) as shown below:

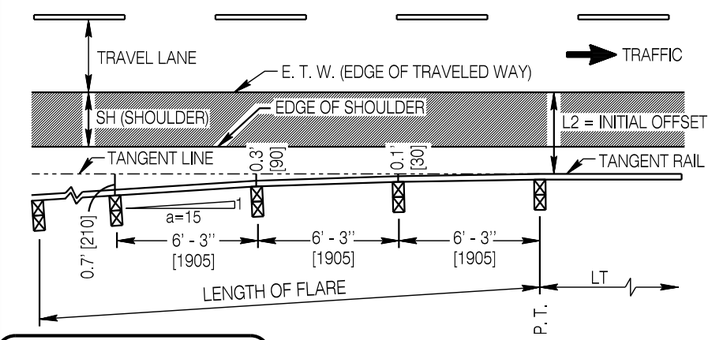

TYPICAL 1W:15L FLARE LAYOUT

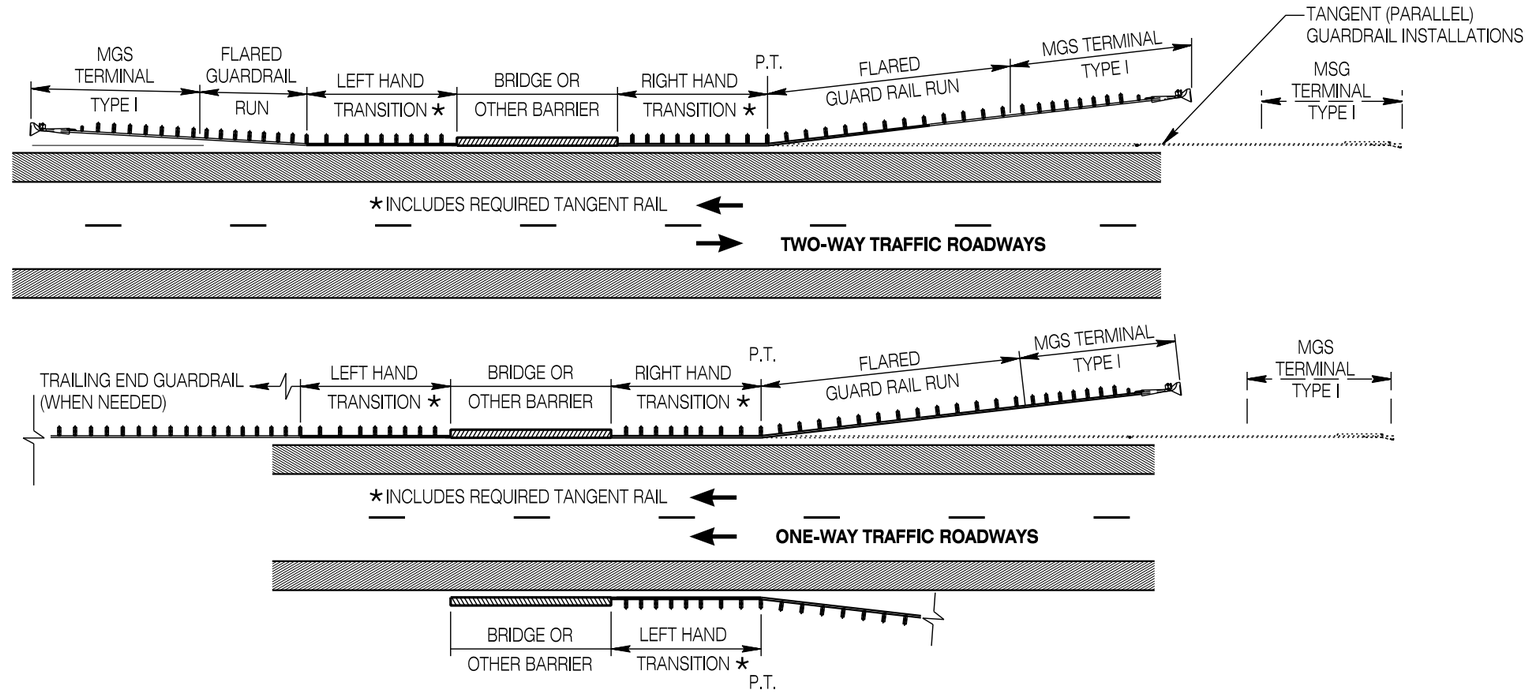

CONNECTIONS TO BRIDGE RAILING AND OTHER TRAFFIC BARRIERS

Connect MGS guardrail to bridge rail and/or concrete barrier using the appropriate transition section at all ends receiving guardrail.

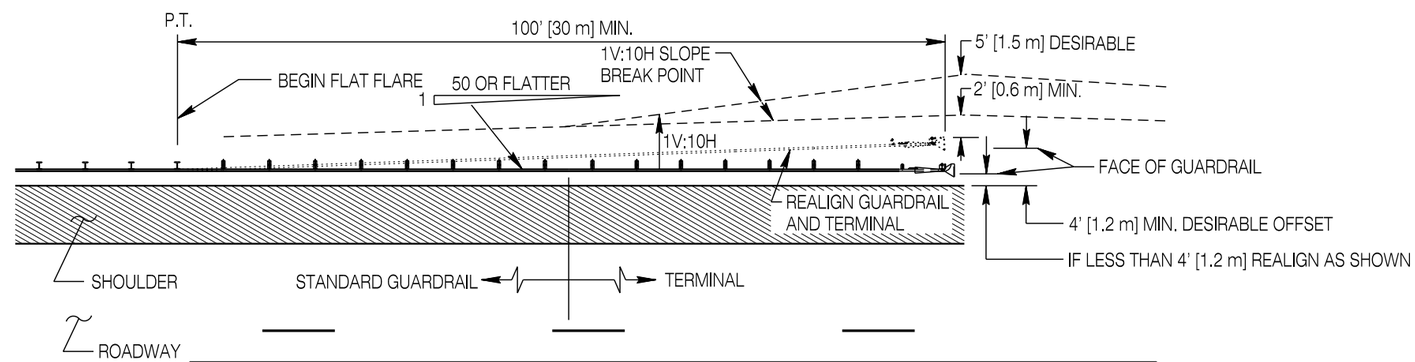

TANGENT (PARALLEL) GUARDRAIL INSTALLATIONS WHERE FACE OF GUARDRAIL IS LESS THAN 4 FEET [1.2 m] FROM THE EDGE OF SHOULDER

For tangent (parallel) guardrail installations within 4 feet [1.2 m] of the edge of the shoulder, realign a minimum of the last 100 feet [30 m] of guardrail on a flat flare to obtain up to a 4 foot [1.2 m] offset at the terminal, assuming adequate grading can be provided behind the guardrail and terminal. Maintain 1V:10H slopes from the shoulder to a minimum of 2 feet [0.6 m] behind the terminal or more desirably to 5 feet [1.5 m] behind the terminal.

Designed by: WBW	GENERAL REQUIREMENTS
Drawn by: JK	
Checked by: WBW	
Previous Dwg. No. NEW	

Note: Units shown in brackets [ ] are metric and are in millimeters (mm) unless other units are shown.

WYOMING DEPARTMENT OF TRANSPORTATION

MGS GUARDRAIL

STANDARD PLAN

STANDARD PLAN NUMBER **606-2**

SHEET 1 of 18

Issued by: ENGINEERING SERVICES

Date Issued: OCTOBER 2013

NOTES

① **Shielding Fixed Object Hazards -** Do not place the guardrail any closer than the working width of the system to fixed object hazards which extend above ground line behind. Working width is the minimum distance from front face of the guardrail to the closest exposed face of a fixed object hazard located behind the guardrail.

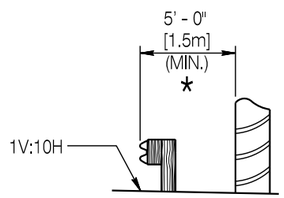

SECTION A - A
PROPER GUARDRAIL PLACEMENT

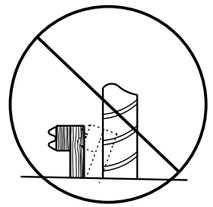

INCORRECT GUARDRAIL PLACEMENT

For fixed object hazards within close proximity of the guardrail (up to 1 1/2 ft. [0.5 m] plus the working width of the system), place a minimum of 25 ft. [7.6 m] of guardrail tangent (parallel) to the roadway on both the upstream and downstream end of the guardrail before flaring. When using reduced post spacing, extend the reduced spacing 25 ft. [7.5 m] upstream and downstream of the hazard and place tangent (parallel) to the roadway.

System	Post Spacing	Working Width *
Standard MGS	6' - 3'' [1905]	5 ft. [1.5 m]
MGS Half Post Spacing	3' - 1 1/2'' [950]	4 ft. [1.2 m]
MGS Quarter Post Spacing	1' - 6 3/4'' [475]	3 ft. [0.9 m]
MGS with Long Post & Steep Slope Behind	6' - 3" [1905]	5 1/2 ft [1.7 m]
MGS Long Span	Up to 25' [7.6 m]	8 ft. [2.4 m]

② **Flared vs. Tangent (Parallel) Installation -** Drawing depicts flared guardrail runs with solid lines and tangent (parallel) installations in dashed lines.

③ **Flared Terminals -** If Terminal Type II is specified, provide the required terminal offset flare in addition to any guardrail flare or to a tangent alignment.

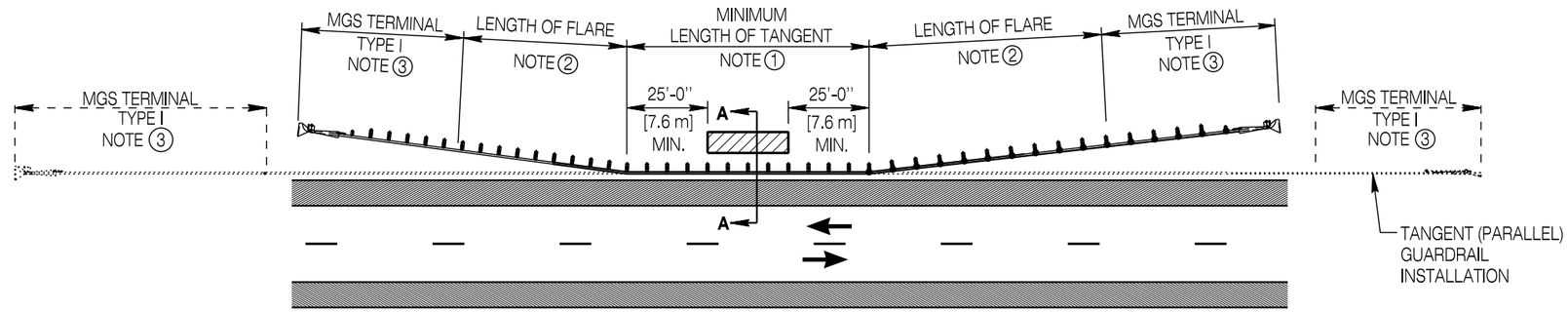

TYPICAL GUARDRAIL PLACEMENT AROUND A FIXED OBJECT

TWO WAY TRAFFIC ROADWAYS

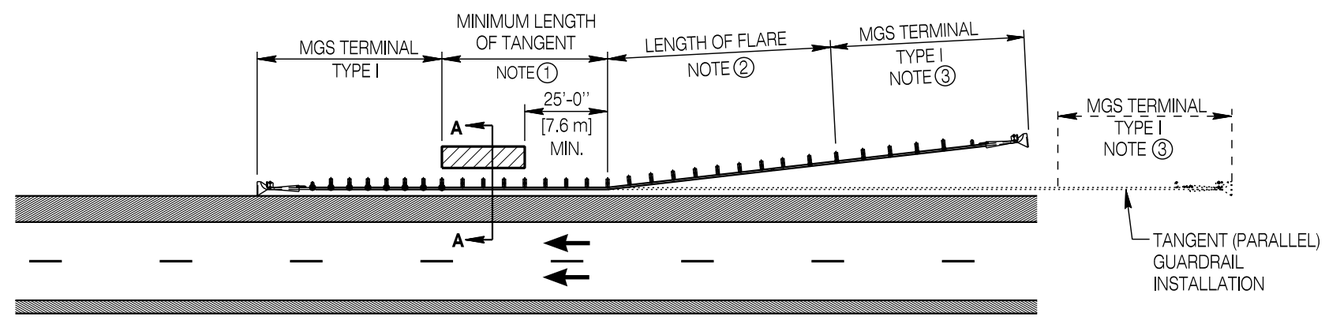

TYPICAL GUARDRAIL PLACEMENT AROUND A FIXED OBJECT

ONE WAY TRAFFIC ROADWAYS SUCH AS DIVIDED HIGHWAYS

Designed by: WBW	
Drawn by: JK	
Checked by: WBW	
Previous Dwg. No. NEW	

GUARDRAIL PLACEMENT AROUND FIXED OBJECT HAZARDS

WYOMING DEPARTMENT OF TRANSPORTATION

MGS GUARDRAIL

STANDARD PLAN

STANDARD PLAN NUMBER
606-2
SHEET 2 of 18
Issued by: ENGINEERING SERVICES
Date Issued: OCTOBER 2013

Note: Units shown in brackets [ ] are metric and are in millimeters (mm) unless other units are shown.

GRADING NOTES

If necessary, modify the earthwork shown in the plans and as staked to provide these minimum grading requirements at guardrail installations. The engineer will pay for this work using standard grading bid items as provided in the plans.

① Ensure the cross-slope of the earthwork in the area approaching a guardrail installation, the area around the terminal and the area of the guardrail flare is a 1V:10H surface or flatter.

② Ensure cross slope of grading from roadway to the barrier face is 1V:10H or flatter. Extend 1V:10H a minimum of 2 ft. [610] behind the guardrail posts. The department may specify 1V:8H for the guardrail installation where drainage and/or snow accumulation must be mitigated.

③ Ensure the area immediately behind and beyond the terminal is traversable and free from fixed object hazards or at least similar in character to upstream, unshielded slopes located within the clear-zone. Ensure a slope of 1V:4H or flatter; if not practical, use a maximum slope of 1V:3H. Extend the traversable slope for a distance X beyond post 3 of the end terminal.

If not shown in the plans, calculate X from the formula below:

$$X = (CZ - Y)(L_R) / (CZ)$$

DESIGN SPEED		L_R Runout Length							
		ADT OVER 10,000		ADT 5,000 to 10,000		ADT 1,000 to 5,000		ADT Under 1000	
mph	[km/h]	ft	[m]	ft	[m]	ft	[m]	ft	[m]
80	130	470	143	430	131	380	116	330	101
70	110	360	110	330	101	290	88	250	76
60	100	300	91	250	76	210	64	200	61
50	80	230	70	190	58	160	49	150	46
40	60	160	49	130	40	110	34	100	30
30	50	110	34	90	27	80	24	70	21

④ For tangent guardrail installations where the face of the guardrail at the impact head of the terminal is less than 4 ft. [1.2 m] from the shoulder break point, realign the guardrail and terminal as shown in detail on **SHEET 1** of this standard plan.

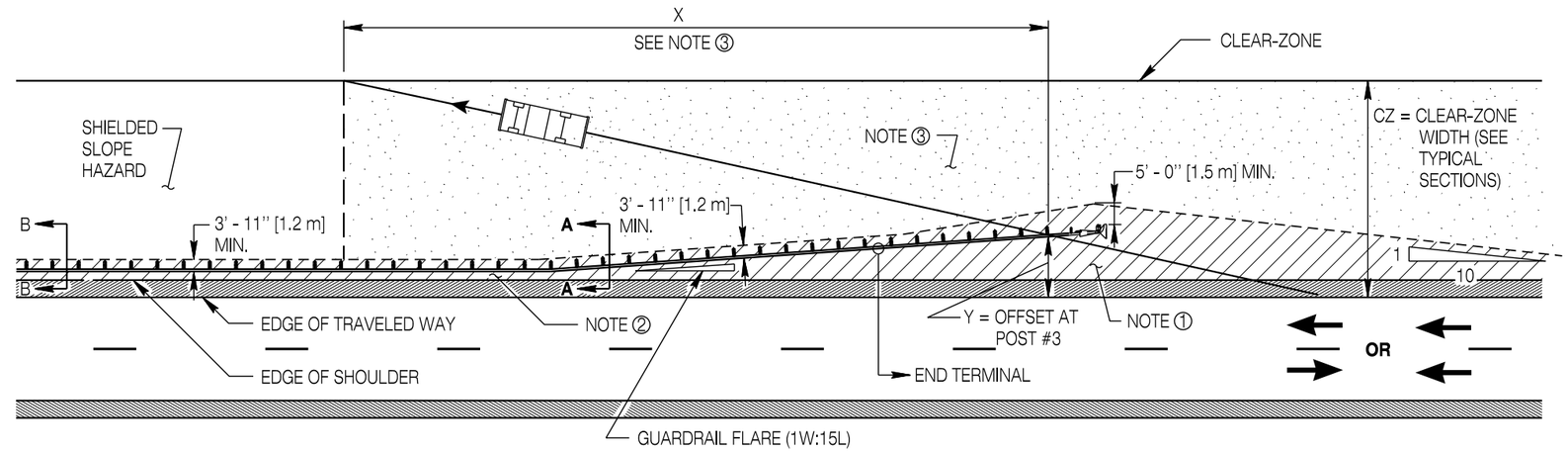

APPROACH END GRADING - FLARED GUARDRAIL INSTALLATION

(APPLIES TO TWO WAY TRAFFIC AND ONE WAY TRAFFIC ROADWAYS SUCH AS DIVIDED HIGHWAYS)

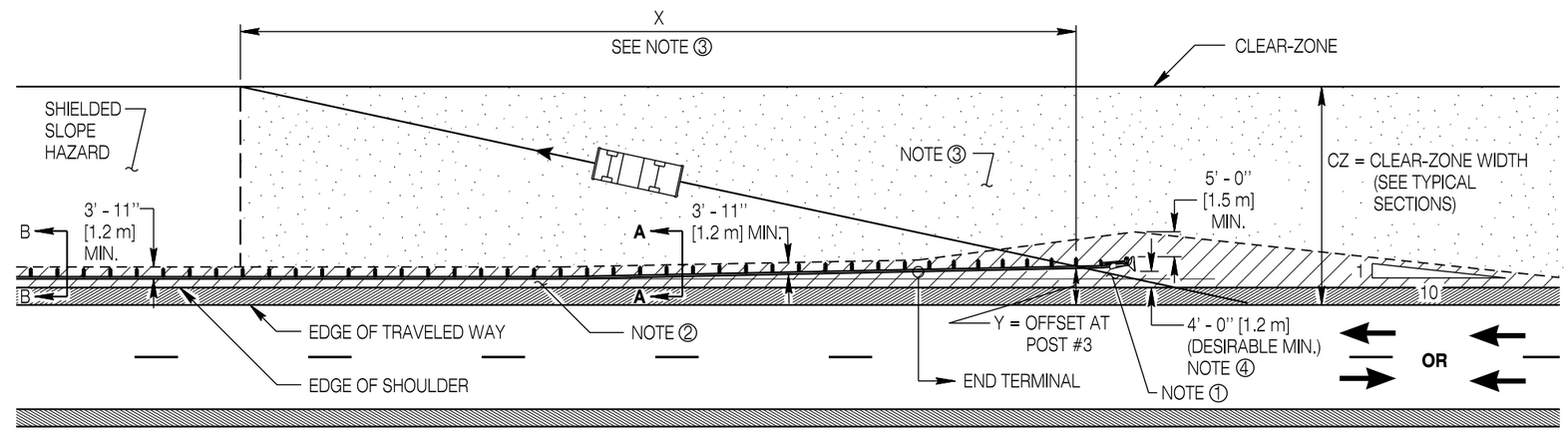

APPROACH END GRADING - TANGENT (PARALLEL) GUARDRAIL INSTALLATION

(APPLIES TO TWO WAY TRAFFIC AND ONE WAY TRAFFIC ROADWAYS SUCH AS DIVIDED HIGHWAYS)

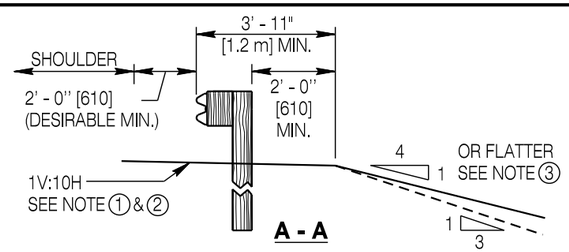

RUNOUT GRADING BEHIND GUARDRAIL

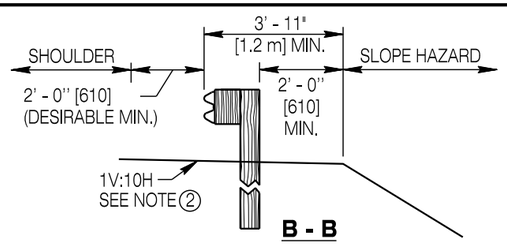

FILL SLOPE HAZARD PROTECTION

Designed by: WBW	
Drawn by: JK	GRADING REQUIREMENTS
Checked by: WBW	
Previous Dwg. No. NEW	

Note: Units shown in brackets [ ] are metric and are in millimeters (mm) unless other units are shown.

WYOMING DEPARTMENT OF TRANSPORTATION

MGS GUARDRAIL

STANDARD PLAN

STANDARD PLAN NUMBER **606-2**

SHEET 3 of 18

Issued by: ENGINEERING SERVICES

Date Issued: OCTOBER 2013

GRADING NOTES

If necessary, modify the earthwork shown in the plans and as staked to provide these minimum grading requirements at guardrail installations. The engineer will pay for this work using standard grading bid items as provided in the plans.

① Ensure the cross-slope of the earthwork in the area approaching a guardrail installation, the area around the terminal and the area of the guardrail flare is a 1V:10H surface or flatter.

② Ensure cross slope of grading from roadway to the barrier face is 1V:10H or flatter. Extend 1V:10H a minimum of 2 ft. [610] behind the guardrail posts. The department may specify 1V:8H for the guardrail installation where drainage and/or snow accumulation must be mitigated.

③ Ensure the area immediately behind and beyond the terminal is traversable and free from fixed object hazards or at least similar in character to upstream, unshielded slopes located within the clear-zone. Ensure a slope of 1V:4H or flatter; if not practical, use a maximum slope of 1V:3H. Extend the traversable slope for a distance X beyond post 3 of the end terminal.

If not shown in the plans, calculate X from the formula below:

$$X = (CZ - Y)(L_R) / (CZ)$$

DESIGN SPEED		L_R Runout Length							
		ADT OVER 10,000		ADT 5,000 to 10,000		ADT 1,000 to 5,000		ADT Under 1000	
mph	[km/h]	ft	[m]	ft	[m]	ft	[m]	ft	[m]
80	130	470	143	430	131	380	116	330	101
70	110	360	110	330	101	290	88	250	76
60	100	300	91	250	76	210	64	200	61
50	80	230	70	190	58	160	49	150	46
40	60	160	49	130	40	110	34	100	30
30	50	110	34	90	27	80	24	70	21

④ For tangent guardrail installations where the face of the guardrail at the impact head of the terminal is less than 4 ft. [1.2 m] from the shoulder break point, realign the guardrail and terminal as shown in detail on **SHEET 1** of this standard plan.

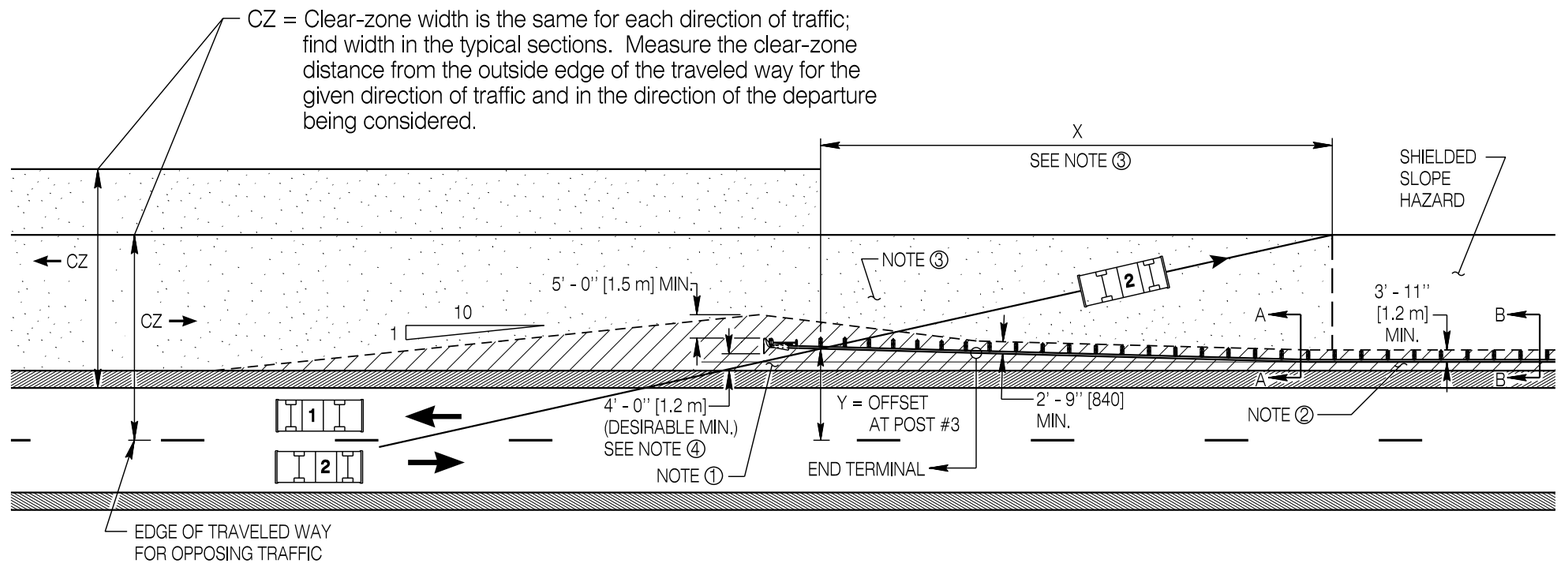

APPROACH END GRADING FOR OPPOSING TRAFFIC LANES

(APPLIES TO TWO WAY TRAFFIC ROADWAYS)

Note: Tangent installation shown, apply same concept for flared installations

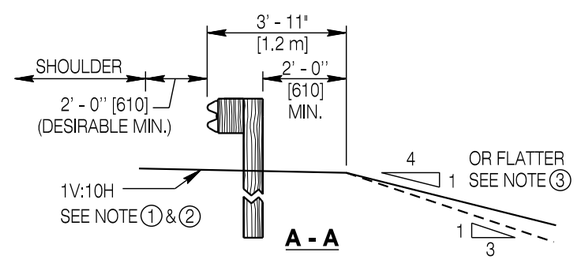

RUNOUT GRADING BEHIND GUARDRAIL

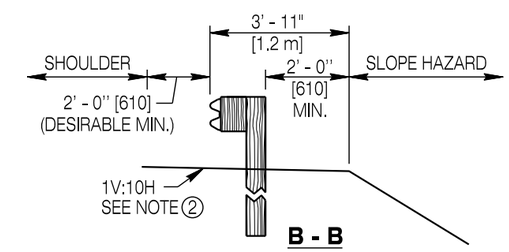

FILL SLOPE HAZARD PROTECTION

Designed by: WBW	GRADING REQUIREMENTS (CONTINUED)
Drawn by: JK	
Checked by: WBW	
Previous Dwg. No. NEW	

Note: Units shown in brackets [ ] are metric and are in millimeters (mm) unless other units are shown.

WYOMING DEPARTMENT OF TRANSPORTATION

MGS GUARDRAIL

STANDARD PLAN

STANDARD PLAN NUMBER **606-2**

SHEET 4 of 18

Issued by: ENGINEERING SERVICES

Date Issued: OCTOBER 2013

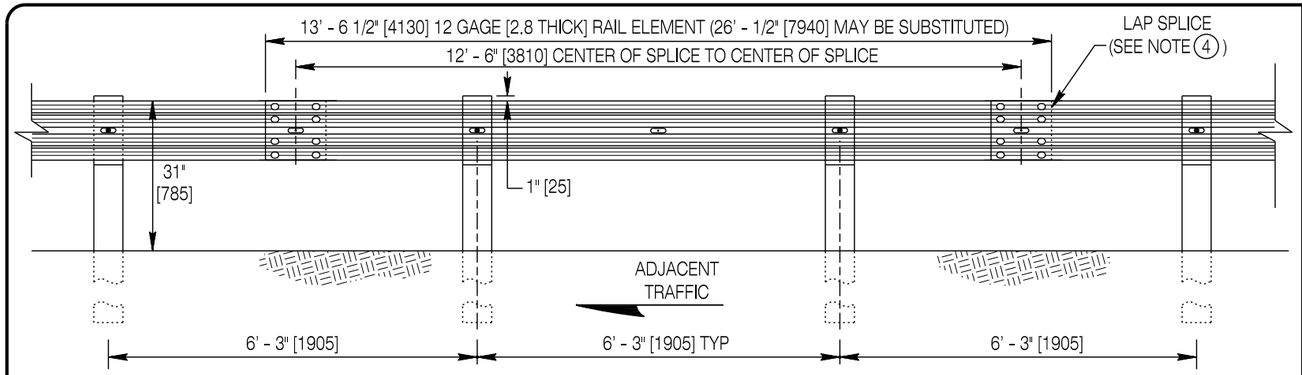

STANDARD MGS GUARDRAIL

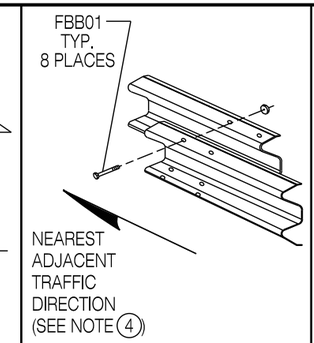

RAIL SPLICE DETAIL

GENERAL NOTES

1. DO NOT use washers between the head of the guardrail bolt and rail element unless specifically shown in the plans.
2. Use post dimensions based on timber species in accordance with the material requirements in the Standard Specifications.
3. All wood cross-section dimensions shown are nominal dimensions.
4. Lap rails and end shoes so exposed rail edge is downstream of the nearest adjacent traffic direction.

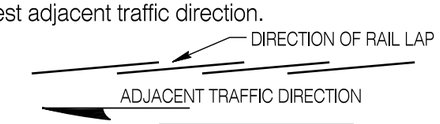

RAIL LAP DETAIL

5. Install reflective tabs every 25 ft. [7.6 m]. Typically install every 4th post.

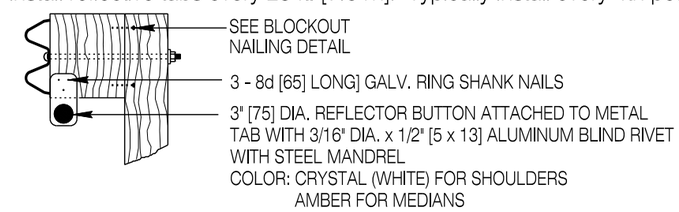

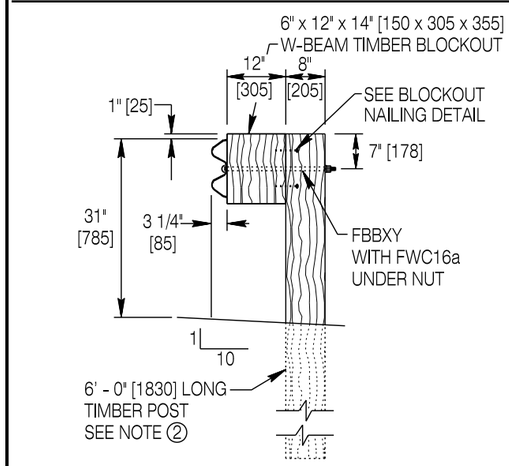

STANDARD MGS WOOD POST DETAIL

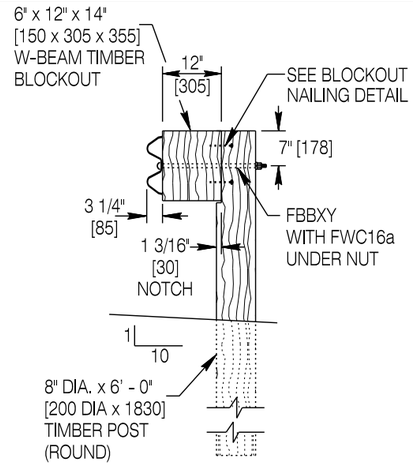

ALTERNATE MGS ROUND WOOD POST DETAIL

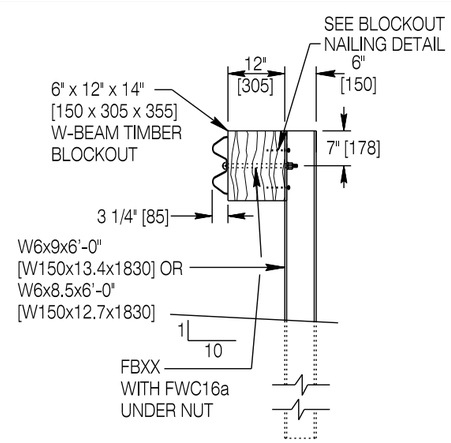

ALTERNATE MGS WITH STEEL POST DETAIL

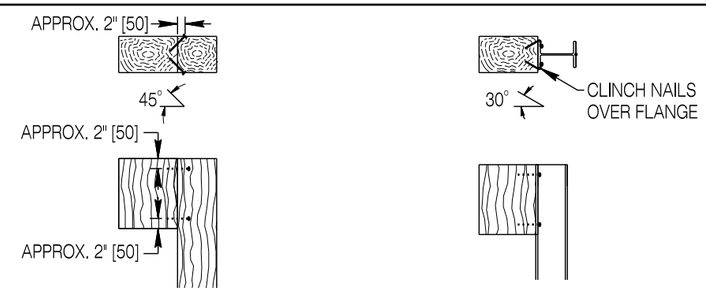

WOOD POST **STEEL POST**

Nail blockout (to prevent rotation) to post, top & bottom, both sides, (4 locations) using 20d [105 long] galvanized nails. If blockouts are two piece design, nail first blockout to second blockout in similar fashion as wood post detail.

BLOCKOUT NAILING DETAIL

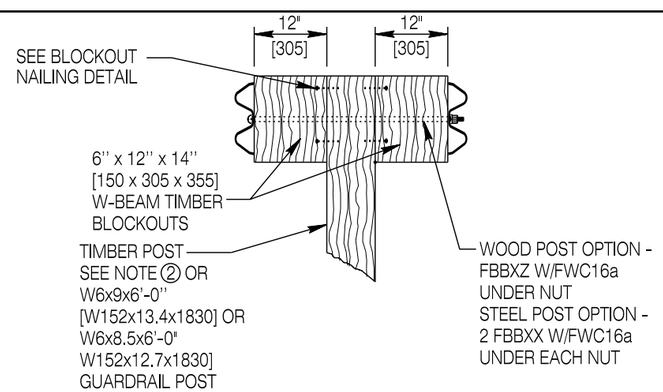

TYPICAL MEDIAN POST DETAIL

STANDARD GUARDRAIL BOLTS

*DESIGNATOR	
FBB01	5/8" x 1 1/4" [16 x 32] BUTTON HEAD GUARDRAIL BOLT WITH NUT
FBBXX	5/8" x 14" [16 x 355] BUTTON HEAD GUARDRAIL BOLT WITH NUT
FBBXY	5/8" x 22" [16 x 560] BUTTON HEAD GUARDRAIL BOLT WITH NUT
FBBXZ	5/8" x 34" [16 x 865] BUTTON HEAD GUARDRAIL BOLT WITH NUT
FWC16a	ROUND WASHER FOR 5/8" [16] GUARDRAIL BOLT

*TASK FORCE13 STANDARD BARRIER GUIDE

Designed by: WBW	STANDARD RUN OF MGS GUARDRAIL
Drawn by: JK	
Checked by: WBW	
Previous Dwg. No. NEW	

Note: Units shown in brackets [ ] are metric and are in millimeters (mm) unless other units are shown.

WYOMING DEPARTMENT OF TRANSPORTATION

MGS GUARDRAIL

STANDARD PLAN

STANDARD PLAN NUMBER **606-2**

SHEET 5 of 18

Issued by: ENGINEERING SERVICES

Date Issued: OCTOBER 2013

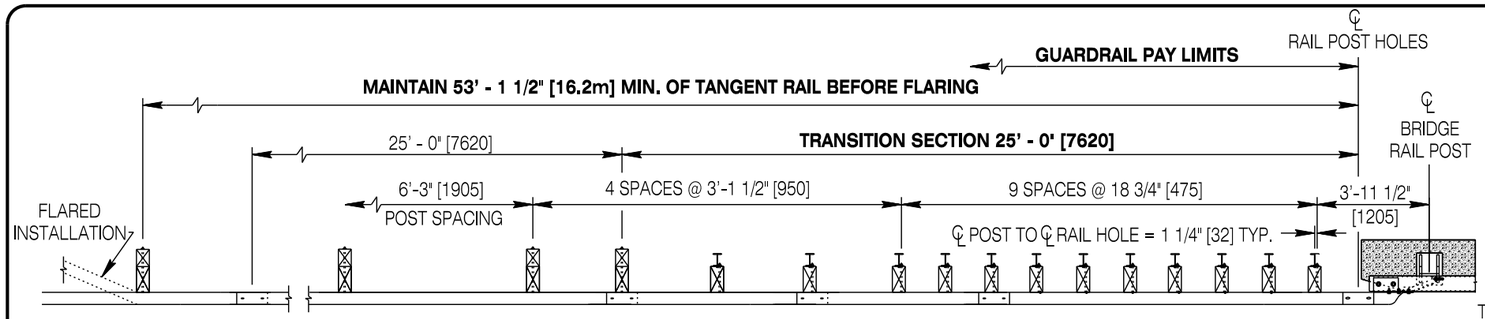

PLAN VIEW

ADJACENT TRAFFIC DIRECTION

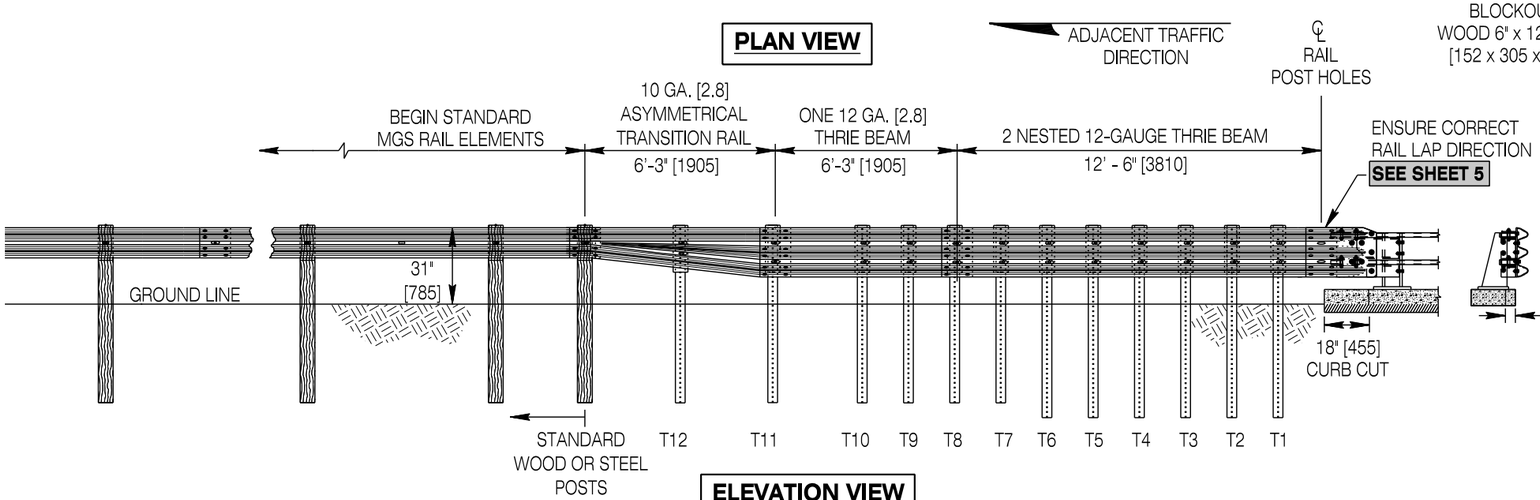

ELEVATION VIEW

LEFT HAND TRANSITION SHOWN (MIRROR DETAILS FOR RIGHT HAND TRANSITION)

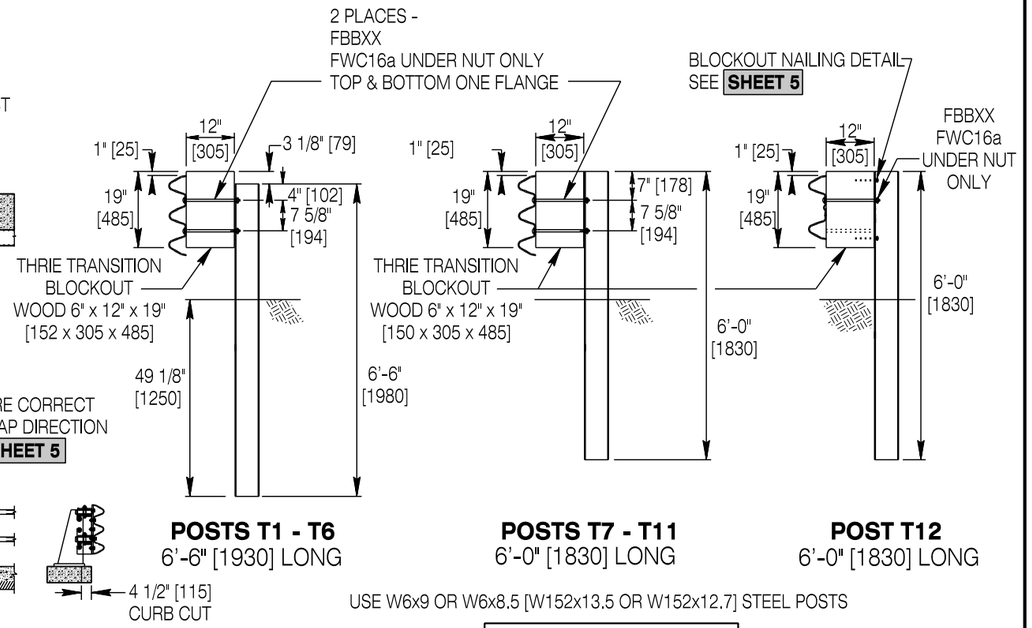

POSTS T1 - T6
6'-6" [1930] LONG

POSTS T7 - T11
6'-0" [1830] LONG

POST T12
6'-0" [1830] LONG

USE W6x9 OR W6x8.5 [W152x13.5 OR W152x12.7] STEEL POSTS

TRANSITION POSTS

STANDARD GUARDRAIL BOLTS	
*DESIGNATOR	
FBB01	5/8" x 1 1/4" [16 x 32] BUTTON HEAD GUARDRAIL BOLT W/NUT
FBBXX	5/8" x 14" [16 x 355] BUTTON HEAD GUARDRAIL BOLT W/NUT
FWC16a	ROUND WASHER FOR 5/8" [16] BOLT

* TASK FORCE13 STANDARD BARRIER GUIDE

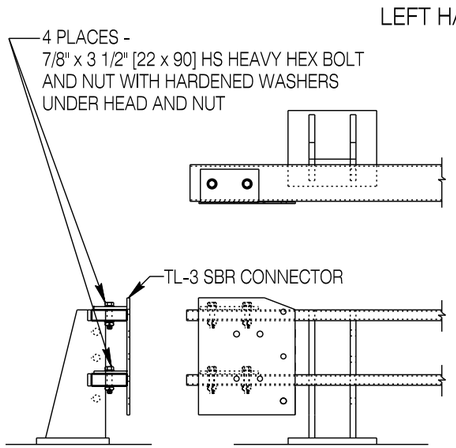

INSTALLATION OF TL-3 SBR CONNECTOR

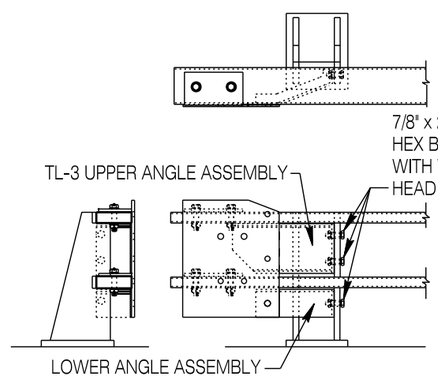

INSTALLATION OF ANGLE ASSEMBLIES

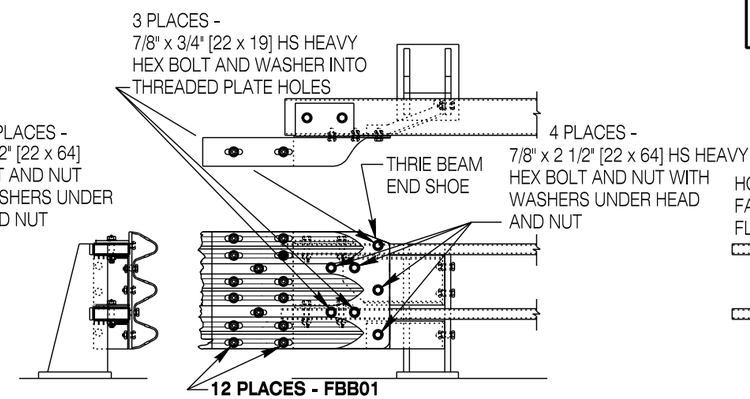

12 PLACES - FBB01
ATTENTION! USE WASHERS BETWEEN THE BOLT HEADS AND THE END SHOE WHEN END SHOE IS PLACED ON OUTSIDE OF THE THRIE BEAM.

INSTALLATION OF THRIE-BEAM END SHOE

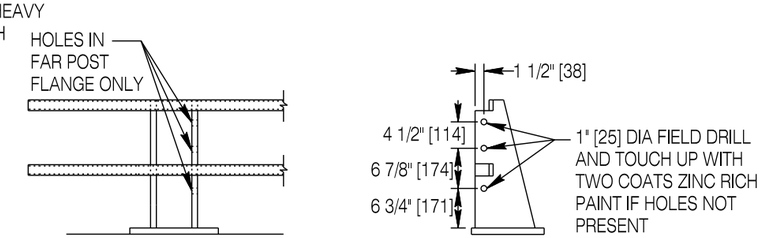

ANGLE PLATE MOUNTING HOLES

Designed by: WBW	TRANSITION A - TO TL-3 STEEL BRIDGE RAIL
Drawn by: JK	
Checked by: WBW	
Previous Dwg. No. NEW	

Note: Units shown in brackets [ ] are metric and are in millimeters (mm) unless other units are shown.

WYOMING DEPARTMENT OF TRANSPORTATION

MGS GUARDRAIL

STANDARD PLAN

STANDARD PLAN NUMBER
606-2
SHEET 6 of 18
Issued by: ENGINEERING SERVICES
Date Issued: OCTOBER 2013

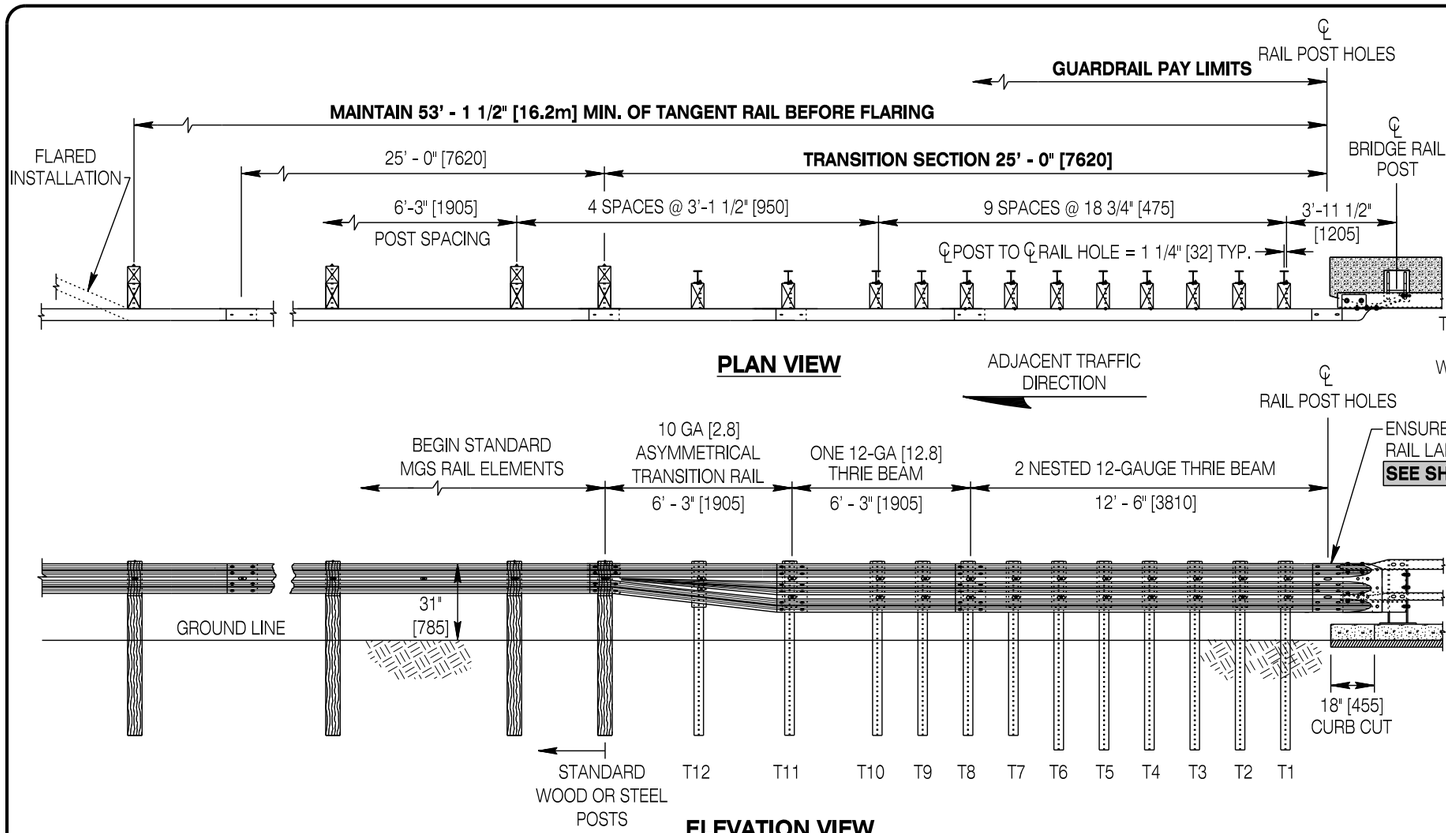

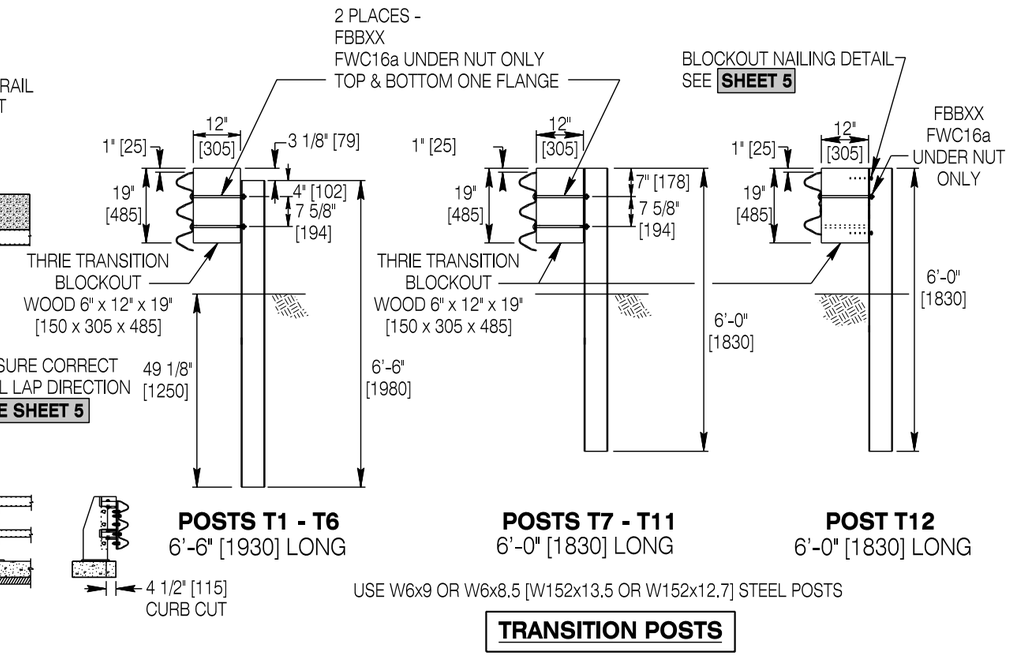

STANDARD GUARDRAIL BOLTS

*DESIGNATOR	
FBB01	5/8" x 1 1/4" [16 x 32] BUTTON HEAD GUARDRAIL BOLT W/NUT
FBBXX	5/8" x 14" [16 x 355] BUTTON HEAD GUARDRAIL BOLT W/NUT
FWC16a	ROUND WASHER FOR 5/8" [16] BOLT

* TASK FORCE13 STANDARD BARRIER GUIDE

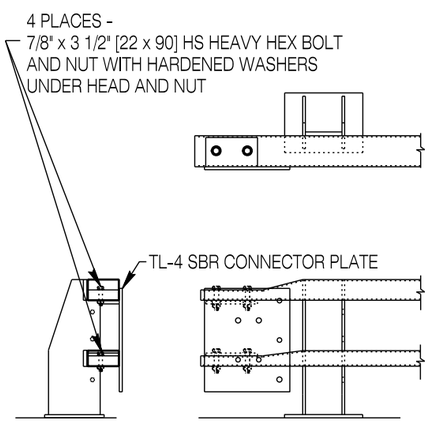

INSTALLATION OF TL-4 SBR CONNECTOR

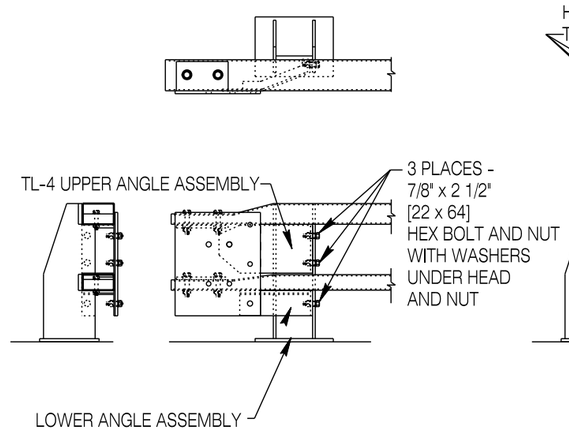

INSTALLATION OF ANGLE ASSEMBLIES

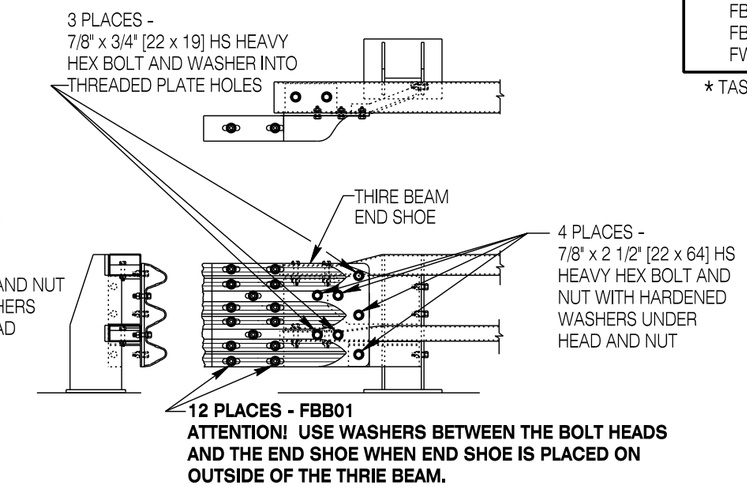

INSTALLATION OF THRIE-BEAM END SHOE

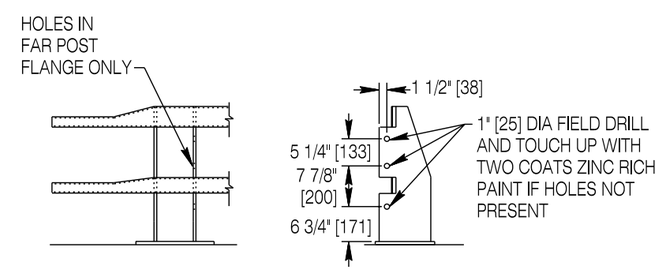

ANGLE PLATE MOUNTING HOLES

Designed by: WBW	
Drawn by: JK	TRANSITION B - TO TL-4 STEEL BRIDGE RAIL
Checked by: WBW	
Previous Dwg. No. NEW	

Note: Units shown in brackets [ ] are metric and are in millimeters (mm) unless other units are shown.

WYOMING DEPARTMENT OF TRANSPORTATION

MGS GUARDRAIL

STANDARD PLAN

STANDARD PLAN NUMBER
606-2
SHEET 7 of 18
Issued by: ENGINEERING SERVICES
Date Issued: OCTOBER 2013

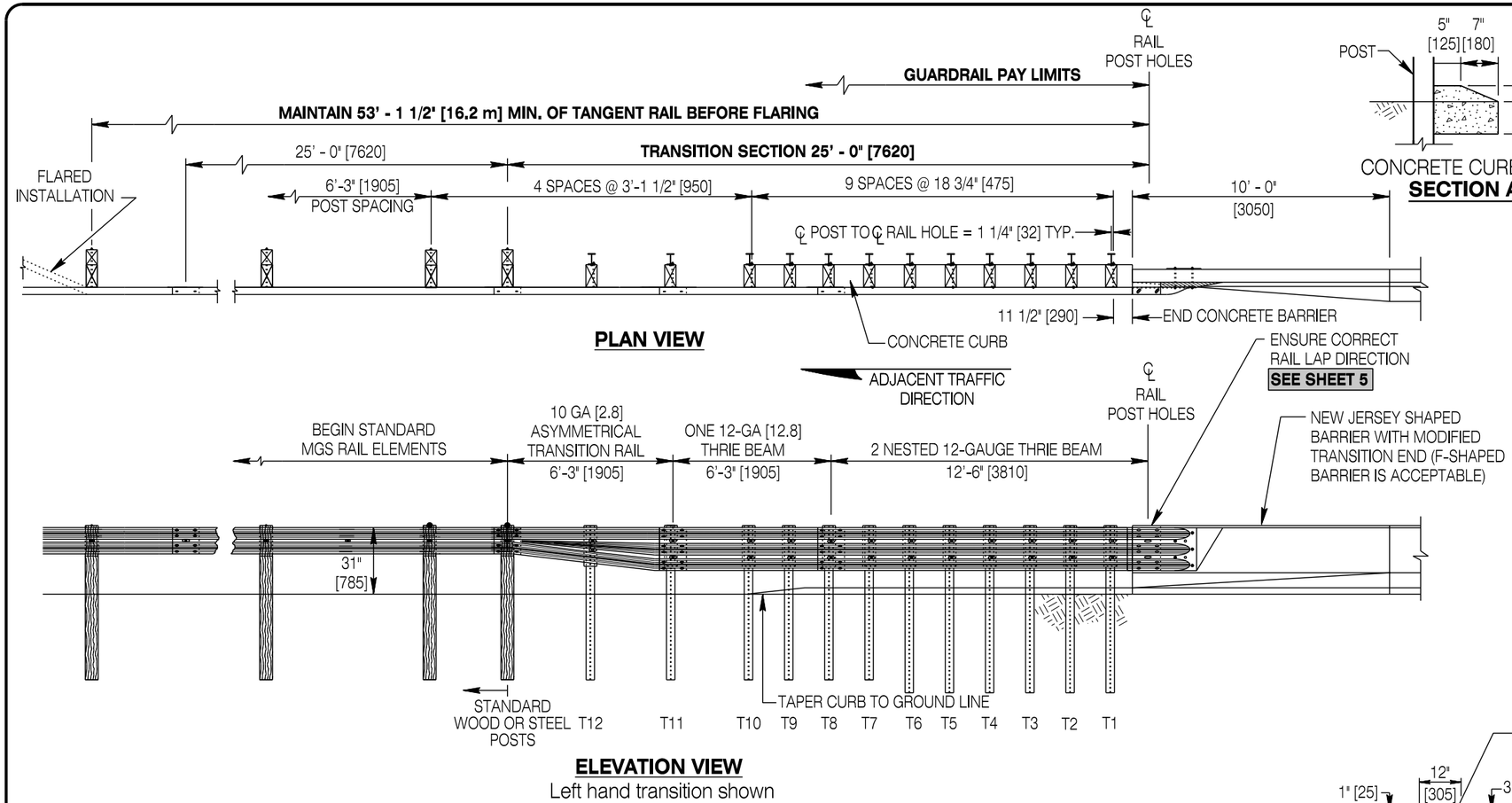

PLAN VIEW

ELEVATION VIEW

Left hand transition shown
(Mirror details for right hand transition).

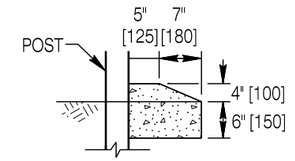

CONCRETE CURB DETAIL
SECTION A-A

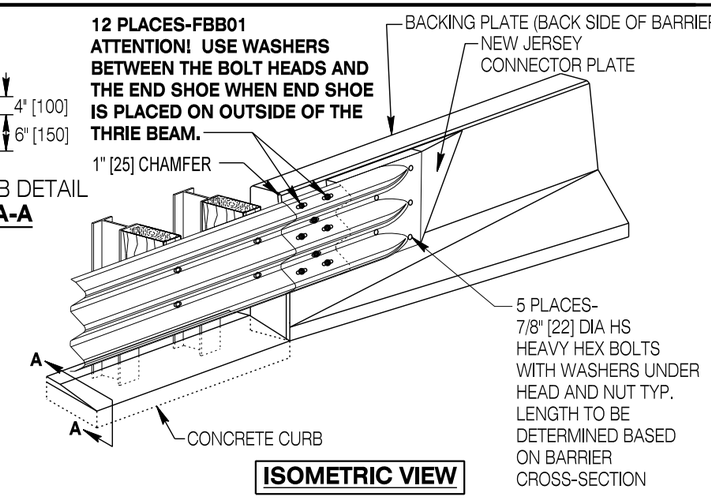

ISOMETRIC VIEW

STANDARD GUARDRAIL BOLTS	
*DESIGNATOR	
FBB01	5/8" x 1 1/4" [16 x 32] BUTTON HEAD GUARDRAIL BOLT W/NUT
FBBXX	5/8" x 14" [16 x 355] BUTTON HEAD GUARDRAIL BOLT W/NUT
FWC16a	ROUND WASHER FOR 5/8" [16] BOLT

* TASK FORCE13 STANDARD BARRIER GUIDE

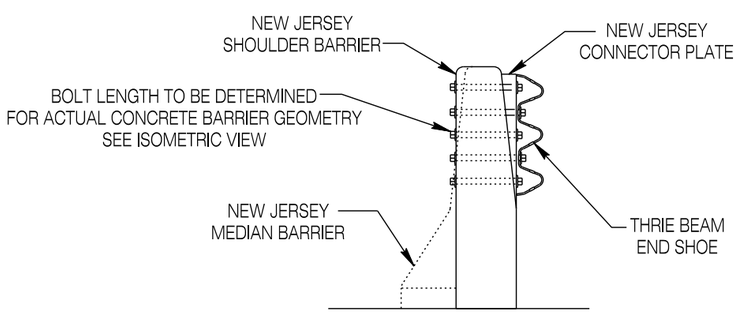

END VIEW

NEW JERSEY CONCRETE BARRIER

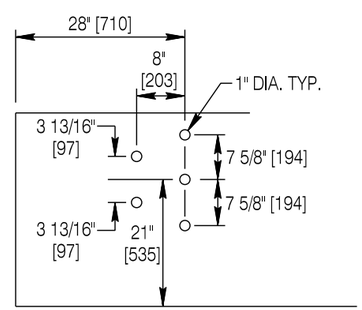

HOLE DRILLING PATTERN FOR CONCRETE BARRIER

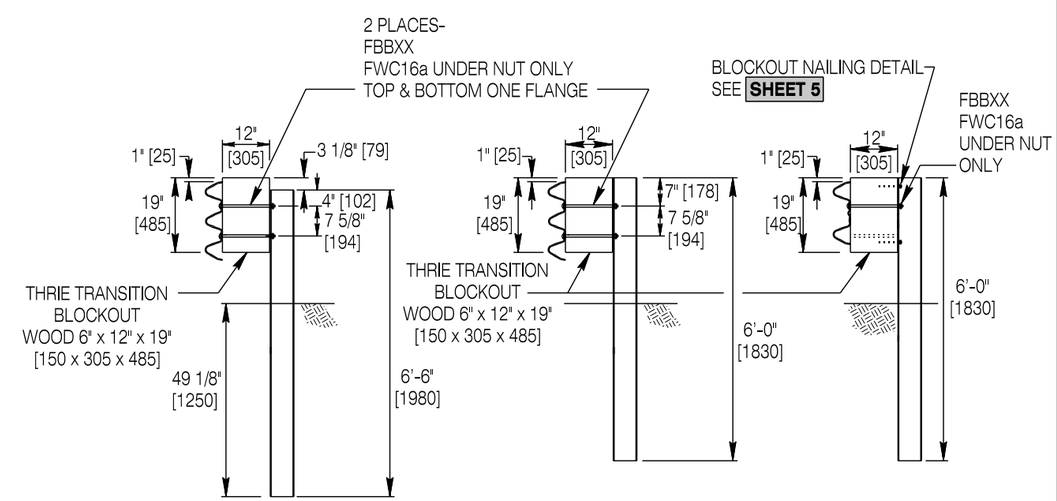

POSTS T1 - T6
6'-6" [1930] LONG

POSTS T7 - T11
6'-0" [1830] LONG

POST T12
6'-0" [1830] LONG

USE W6x9 OR W6x8.5 [W152x13.5 OR W152x12.7] STEEL POSTS

TRANSITION POSTS

Designed by: WBW	
Drawn by: JK	
Checked by: WBW	
Previous Dwg. No. NEW	

TRANSITION C - TO NEW JERSEY CONCRETE BARRIER

Note: Units shown in brackets [ ] are metric and are in millimeters (mm) unless other units are shown.

WYOMING DEPARTMENT OF TRANSPORTATION

MGS GUARDRAIL

STANDARD PLAN

STANDARD PLAN NUMBER
606-2
SHEET 8 of 18
Issued by: ENGINEERING SERVICES
Date Issued: OCTOBER 2013

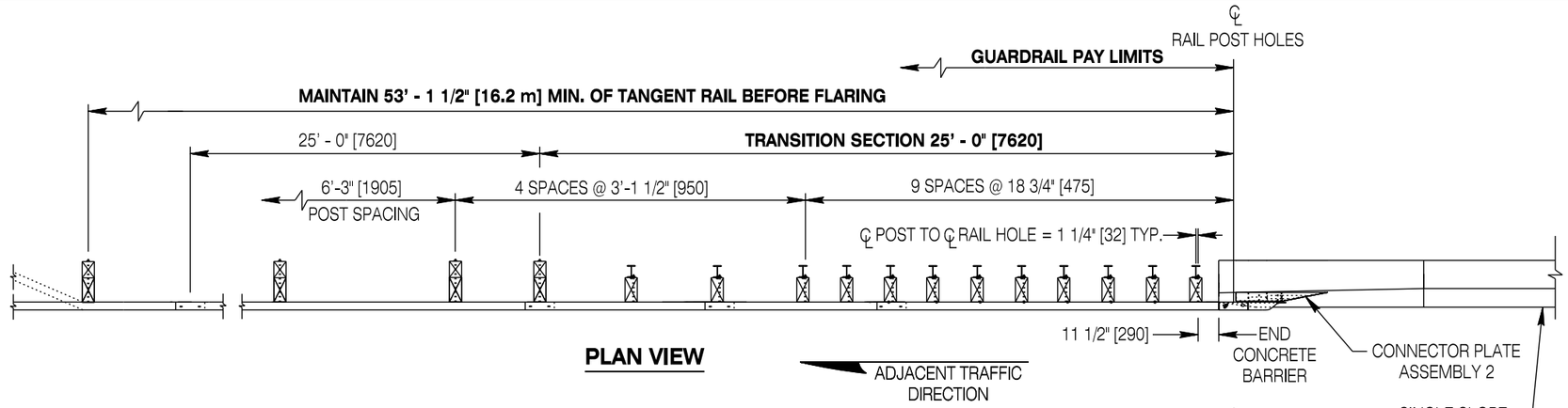

PLAN VIEW

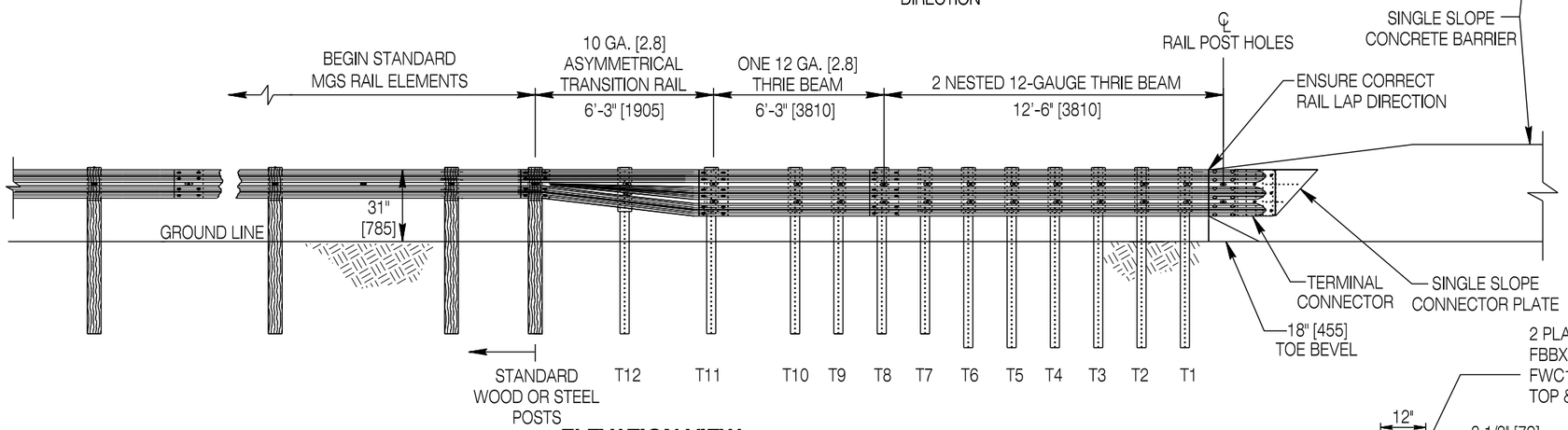

ELEVATION VIEW
Left hand transition shown
(Mirror details for right hand transition).

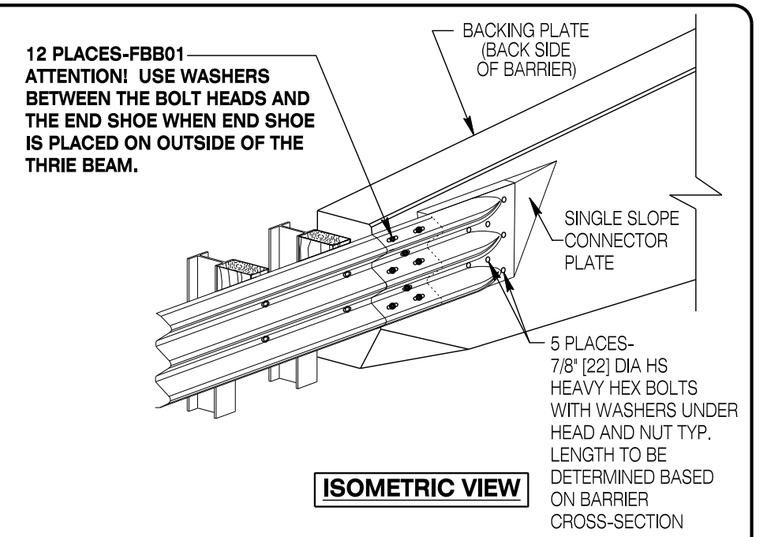

ISOMETRIC VIEW

STANDARD GUARDRAIL BOLTS	
*DESIGNATOR	
FBB01	5/8" x 1 1/4" [35 x 32] BUTTON HEAD GUARDRAIL BOLT W/NUT
FBBXX	5/8" x 14" [16 x 355] BUTTON HEAD GUARDRAIL BOLT W/NUT
FWC16a	ROUND WASHER FOR 5/8" [16] BOLT

* TASK FORCE13 STANDARD BARRIER GUIDE

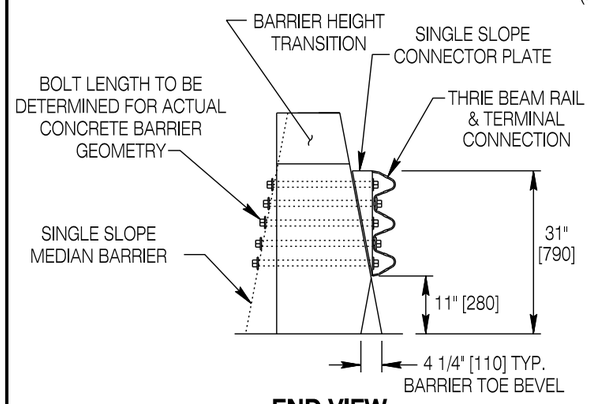

END VIEW
SINGLE SLOPE CONCRETE BARRIER

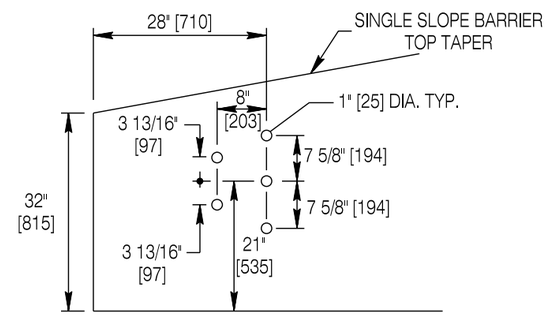

HOLE DRILLING PATTERN FOR CONCRETE BARRIER

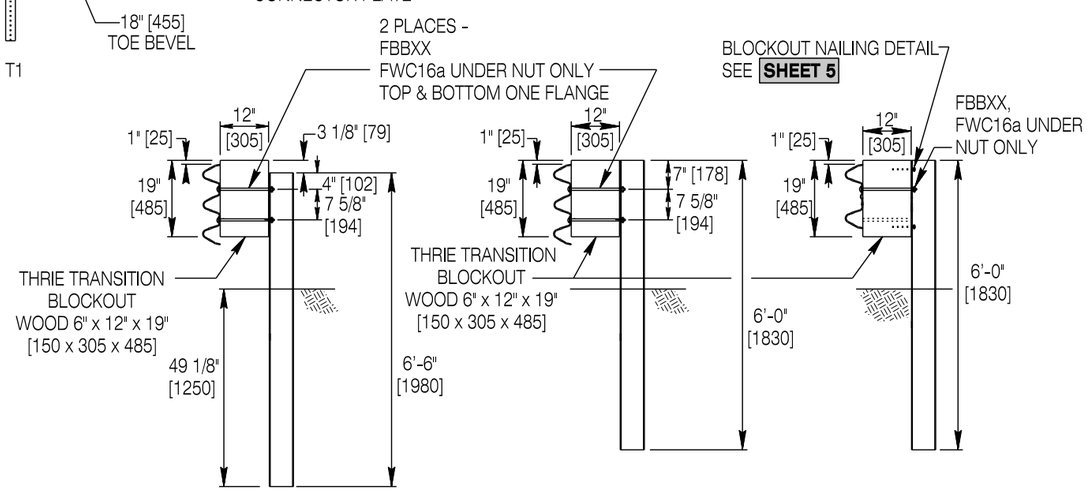

POSTS T1 - T6
6'-6" [1930] LONG

POSTS T7 - T11
6'-0" [1830] LONG

POST T12
6'-0" [1830] LONG

USE W6x9 OR W6x8.5 [W152x13.5 OR W152x12.7] STEEL POSTS

TRANSITION POSTS

Designed by: WBW	TRANSITION D - TO SINGLE SLOPE CONCRETE BARRIER
Drawn by: JK	
Checked by: WBW	
Previous Dwg. No. NEW	

Note: Units shown in brackets [ ] are metric and are in millimeters (mm) unless other units are shown.

WYOMING DEPARTMENT OF TRANSPORTATION

MGS GUARDRAIL

STANDARD PLAN

STANDARD PLAN NUMBER
606-2
SHEET 9 of 18
Issued by: ENGINEERING SERVICES
Date Issued: OCTOBER 2013

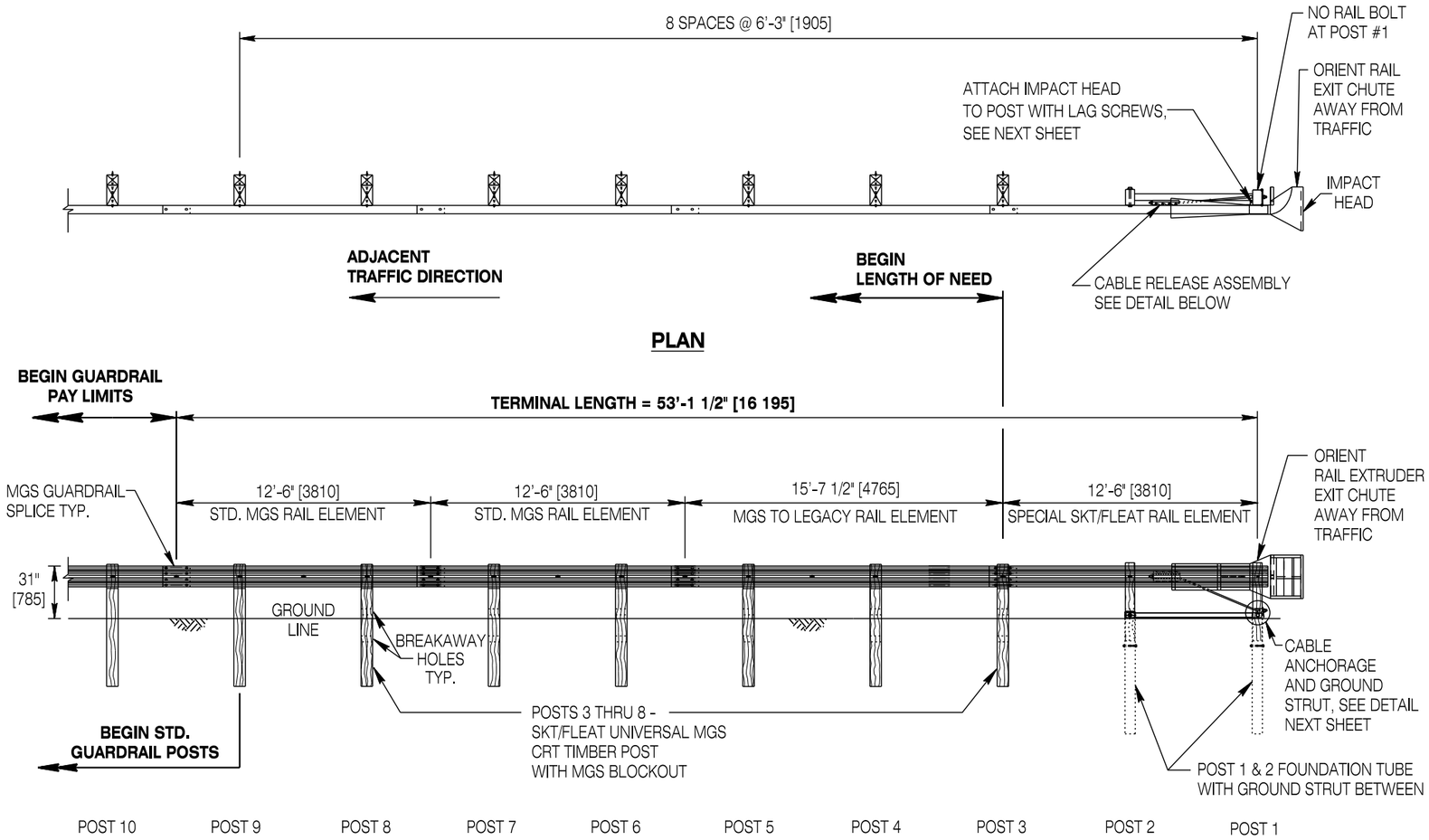

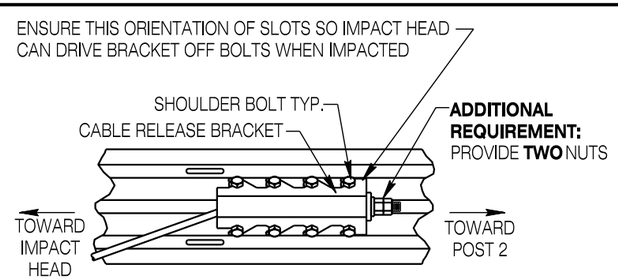

CABLE RELEASE ASSEMBLY ATTACHMENT

(BACK SIDE OF RAIL)

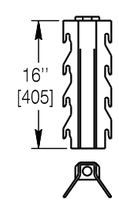

CABLE RELEASE ASSEMBLY

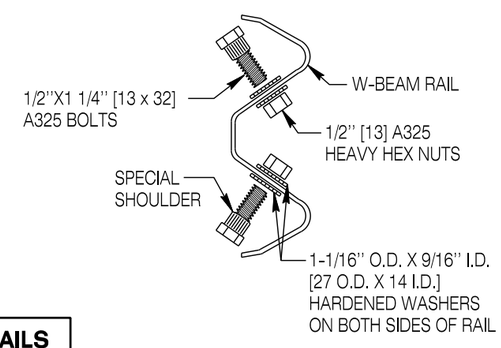

CABLE RELEASE ASSEMBLY DETAILS

NOTES

① The SKT MGS Terminal as shown herein is an acceptable option when "MGS Terminal Type I" is specified unless otherwise indicated in the contract.

The SKT MGS Terminal shown herein is proprietary and can only be manufactured and sold by Road Systems Inc. or its duly authorized representative.

Install in strict accordance to the manufacturer's installation manual and adhere to all warnings.

Any items shown as an "additional requirement" are over and above the manufacturer's standard product requirements.

Summary of additional requirements for the SKT / MGS:

A. Double nut each end of the cable anchor to prevent from loosening.

② Lap the upstream rail (for the adjacent traffic direction) over the downstream rail element at each splice. See rail lap detail on SHEET 5.

③ Attach impact head to post 1 as shown. Do not provide rail attachment bolt at post 1. Ensure rail hole aligns with post hole at post 1.

④ Drive soil tubes with an approved driving head which does not deform tubes. If the tubes are placed in drilled holes, place and compact backfill in lifts to prevent settlement.

⑤ The foundation tubes should not protrude more than 4 in. [100] above ground line. Correct site grading when necessary as directed by the engineer.

⑥ Ensure the cable anchor assembly is taut. Use a locking device (vice grips or channel locking pliers) to prevent twisting or untwisting of the cable when tightening nuts.

⑦ Ensure all bolts, nuts, cable assemblies, cable anchors and bearing plates are galvanized or coated to prevent corrosion.

Designed by: WBW	TERMINAL TYPE I (OPTION 1 - SKT MGS, SHEET 1 OF 2)
Drawn by: JK	
Checked by: WBW	
Previous Dwg. No. NEW	

Note: Units shown in brackets [ ] are metric and are in millimeters (mm) unless other units are shown.

WYOMING DEPARTMENT OF TRANSPORTATION

MGS GUARDRAIL

STANDARD PLAN

STANDARD PLAN NUMBER **606-2**

SHEET 10 of 18

Issued by: ENGINEERING SERVICES

Date Issued: OCTOBER 2013

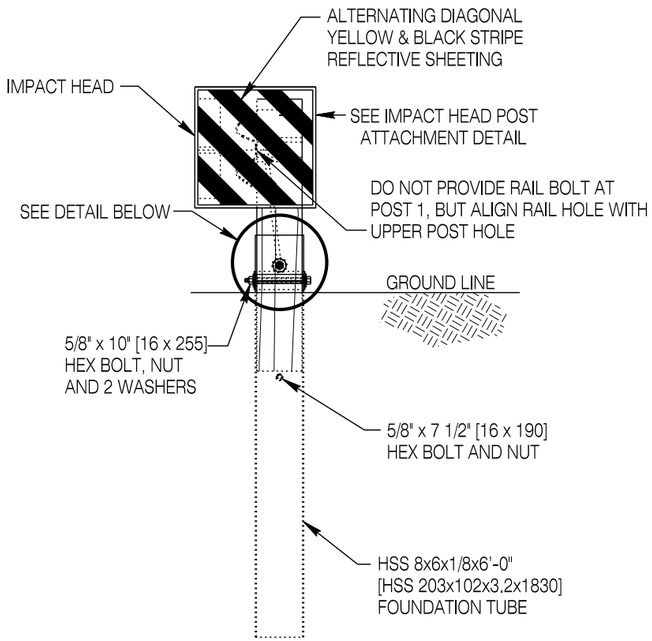

POST 1

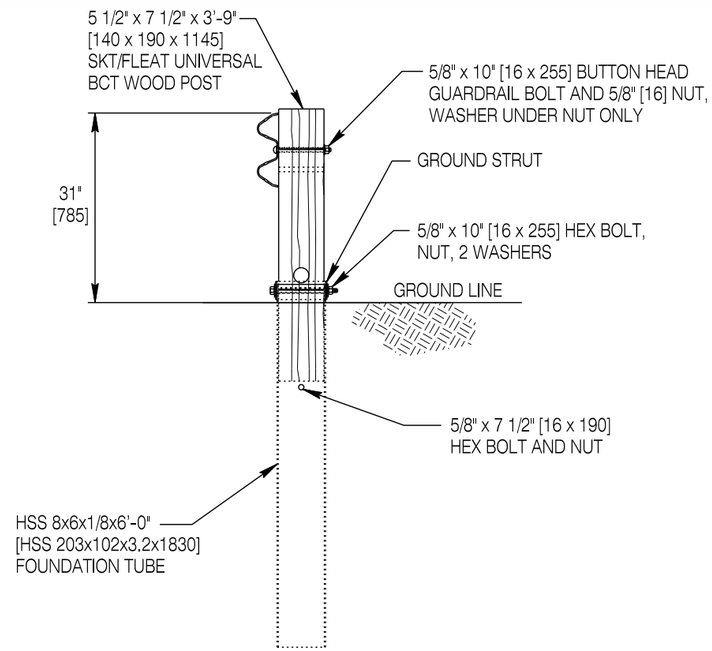

POST 2

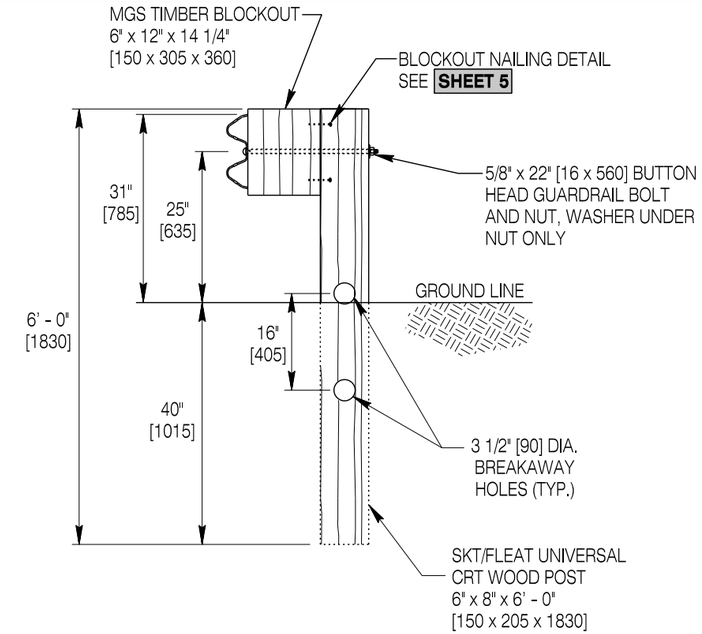

POST 3 THRU 8

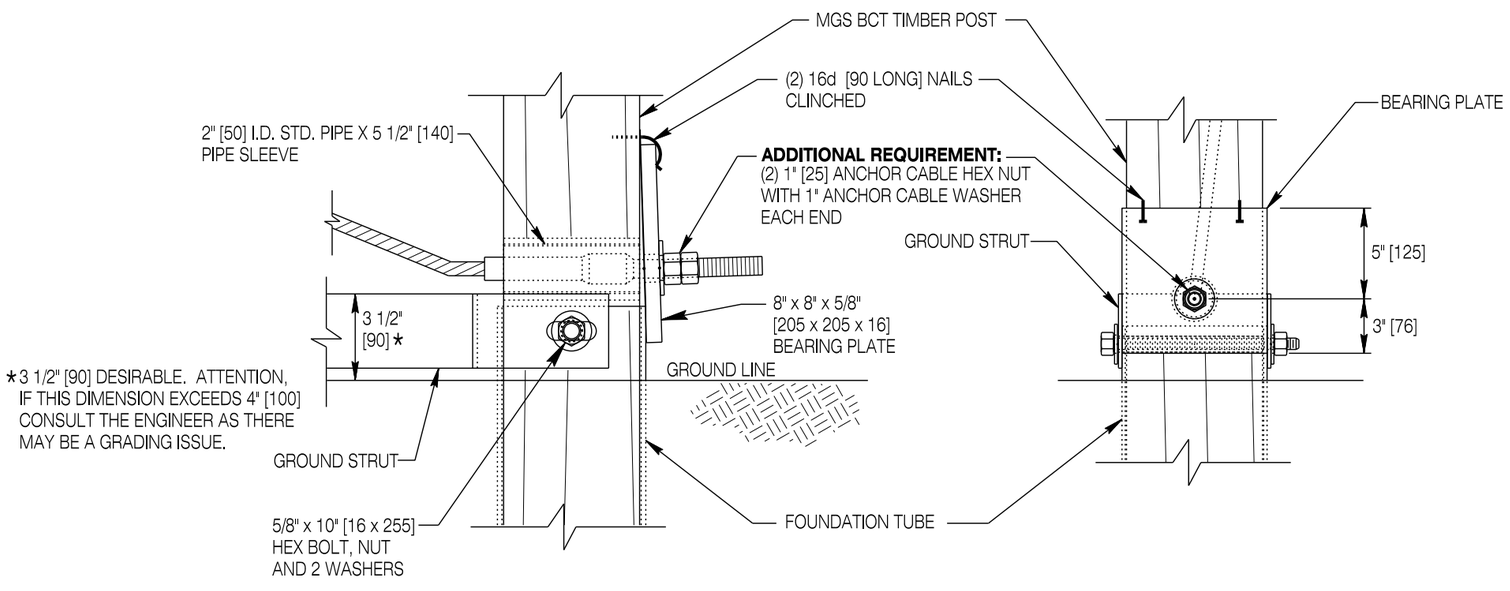

CABLE ANCHORAGE AND GROUND STRUT DETAILS

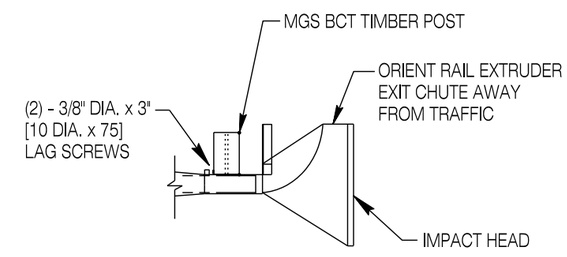

TOP VIEW

SKT IMPACT HEAD POST ATTACHMENT DETAIL

Designed by: WBW	
Drawn by: JK	
Checked by: WBW	
Previous Dwg. No. NEW	

TERMINAL TYPE I (OPTION 1 - SKT MGS, SHEET 2 OF 2)

Note: Units shown in brackets [ ] are metric and are in millimeters (mm) unless other units are shown.

WYOMING DEPARTMENT OF TRANSPORTATION

MGS GUARDRAIL

STANDARD PLAN

STANDARD PLAN NUMBER
606-2
SHEET 11 of 18
Issued by: ENGINEERING SERVICES
Date Issued: OCTOBER 2013

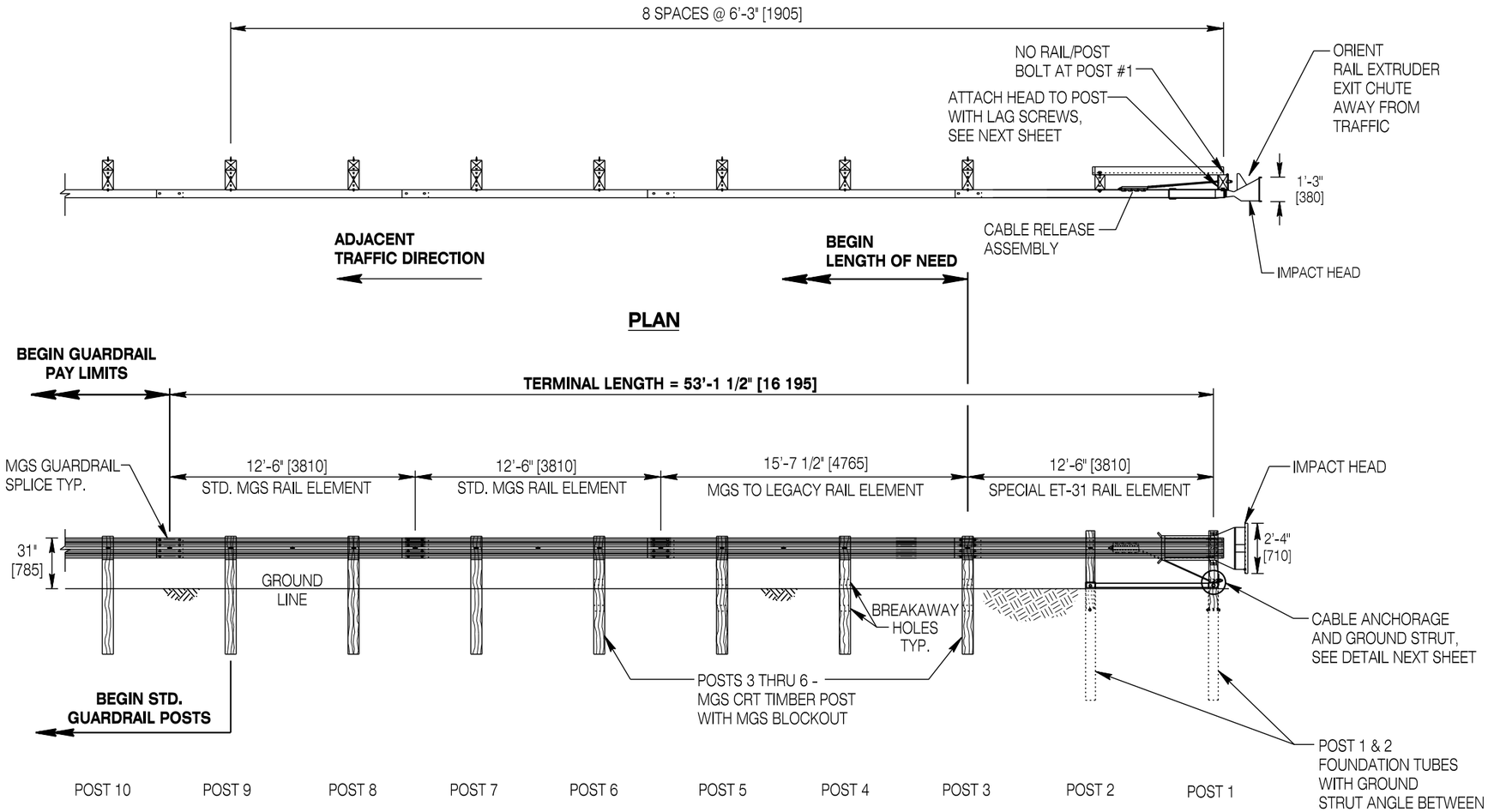

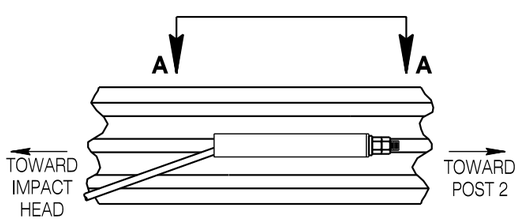

CABLE RELEASE ASSEMBLY ATTACHMENT

(BACK SIDE OF RAIL)

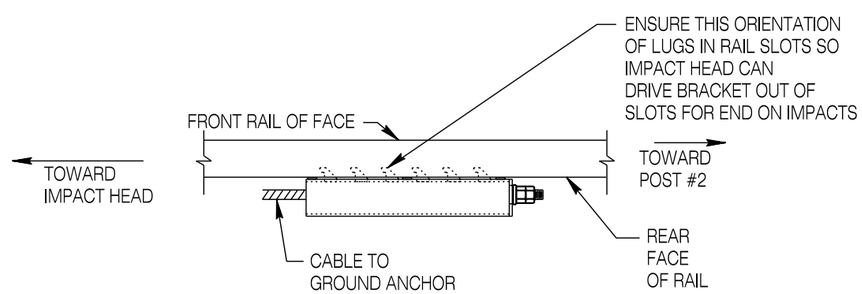

SECTION A-A

(TOP VIEW FROM BACK SIDE OF RAIL)

CABLE RELEASE ASSEMBLY DETAILS

NOTES

① The ET-31 Terminal as shown herein is an acceptable option when "MGS Terminal Type I" is specified unless otherwise indicated in the contract.

The ET-31 Terminal shown herein is proprietary and can only be manufactured and sold by Trinity Industries, Inc. or its duly authorized representative.

Install in strict accordance to the manufacturer's installation manual and adhere to all warnings.

Any items shown as an "additional requirement" are over and above the manufacturer's standard product requirement.

Summary of additional requirements for the ET-31:

A. Double nut each end of the cable anchor to prevent loosening.

B. Provide a two and one half space rail for the second rail element rather than the standard one and one half post space rail.

② Lap the upstream rail (for the adjacent traffic direction) over the downstream rail element at each splice. See rail lap detail on SHEET 5.

③ Attach impact head to post 1 as shown. Do not provide rail attachment bolt at post 1. Ensure rail hole aligns with post hole at post 1.

④ Drive soil tubes with an approved driving head which does not deform tubes. If the tubes are placed in drilled holes, place and compact backfill in lifts to prevent settlement.

⑤ The foundation tubes should not protrude more than 4 in. [100] above ground line. Correct site grading when necessary as directed by the engineer.

⑥ Ensure the cable anchor assembly is taut. Use a locking device (vice grips or channel locking pliers) to prevent twisting or untwisting of the cable when tightening nuts.

⑦ Ensure all bolts, nuts, cable assemblies, cable anchors and bearing plates are galvanized or coated to prevent corrosion.

Designed by: WBW	
Drawn by: JK	
Checked by: WBW	
Previous Dwg. No. NEW	

TERMINAL TYPE I (OPTION 2 - ET-31, SHEET 1 OF 2)

Note: Units shown in brackets [ ] are metric and are in millimeters (mm) unless other units are shown.

WYOMING DEPARTMENT OF TRANSPORTATION

MGS GUARDRAIL

STANDARD PLAN

STANDARD PLAN NUMBER

606-2

SHEET 12 of 18

Issued by: ENGINEERING SERVICES

Date Issued: OCTOBER 2013

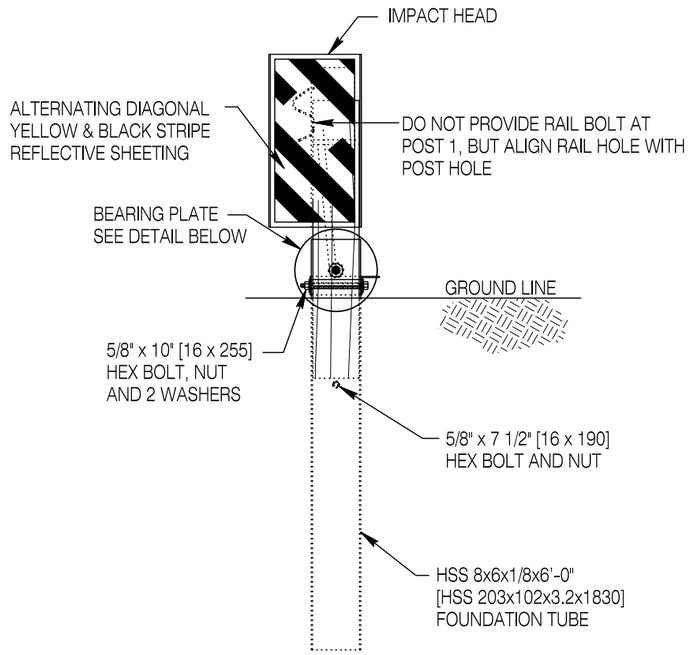

POST 1

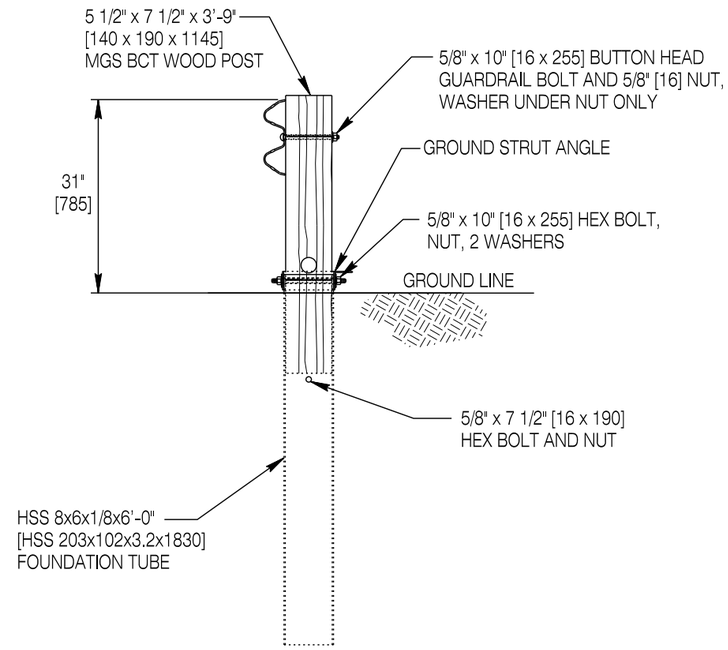

POST 2

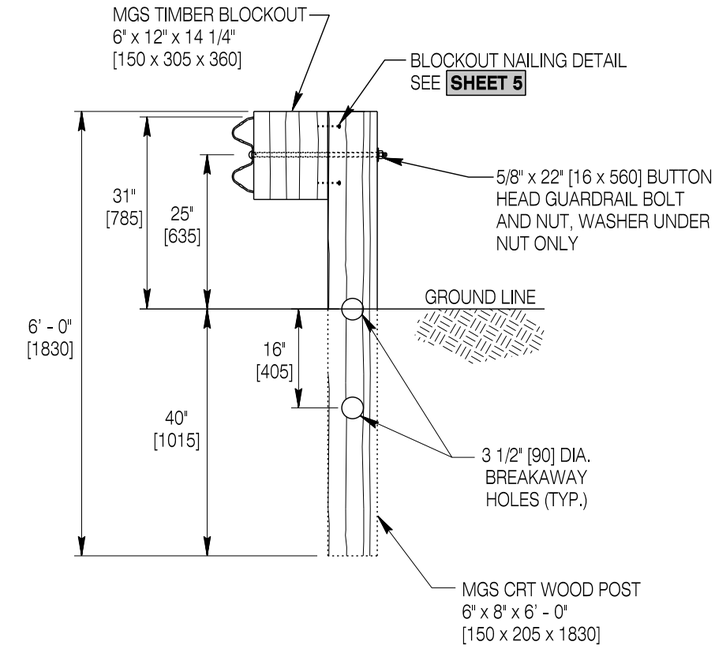

POST 3 THRU 8

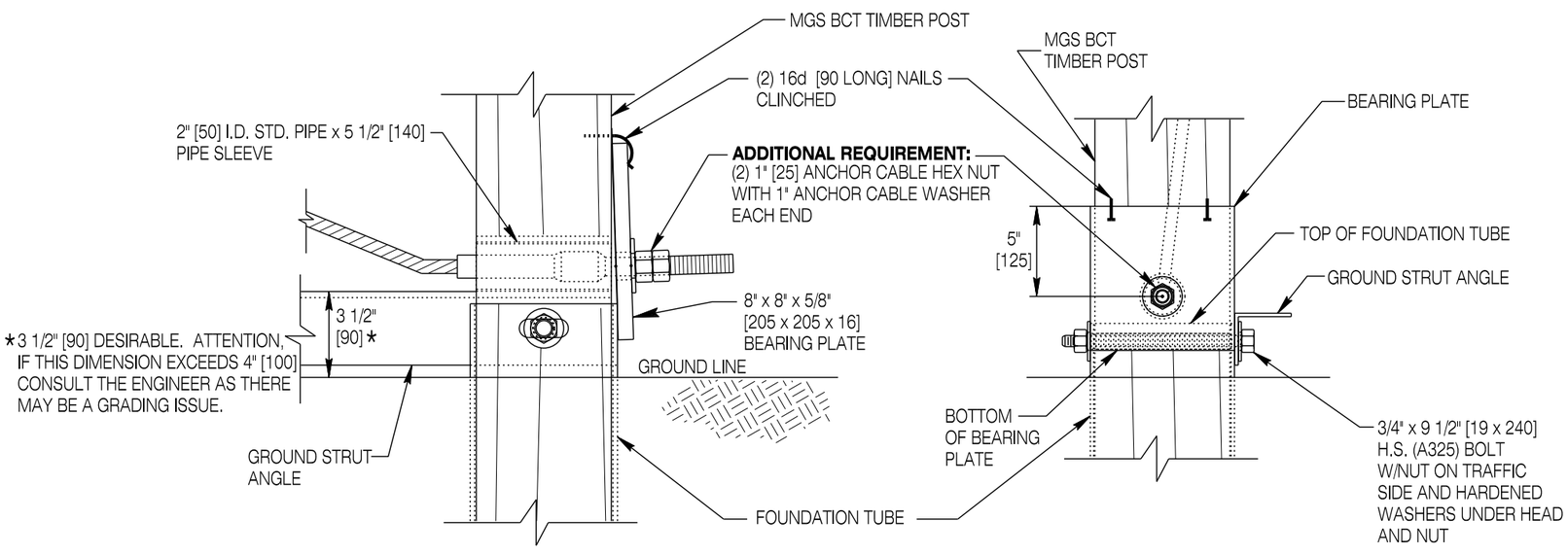

CABLE ANCHORAGE AND GROUND STRUT DETAILS

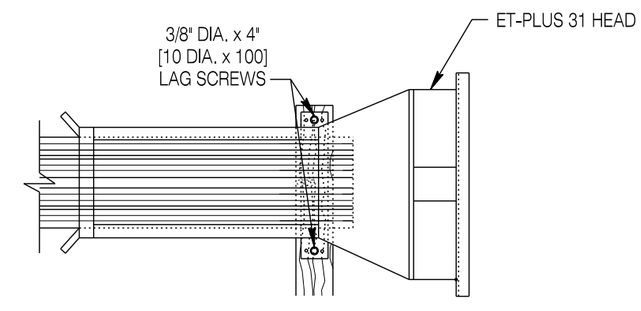

SIDE VIEW

ET-31 IMPACT HEAD POST ATTACHMENT DETAIL

Designed by: WBW Drawn by: JK Checked by: WBW Previous Dwg. No. NEW	TERMINAL TYPE I (OPTION 2 - ET-31, SHEET 2 OF 2)	WYOMING DEPARTMENT OF TRANSPORTATION	MGS GUARDRAIL STANDARD PLAN
	Note: Units shown in brackets [ ] are metric and are in millimeters (mm) unless other units are shown.		STANDARD PLAN NUMBER 606-2 SHEET 13 of 18 Issued by: ENGINEERING SERVICES Date Issued: OCTOBER 2013

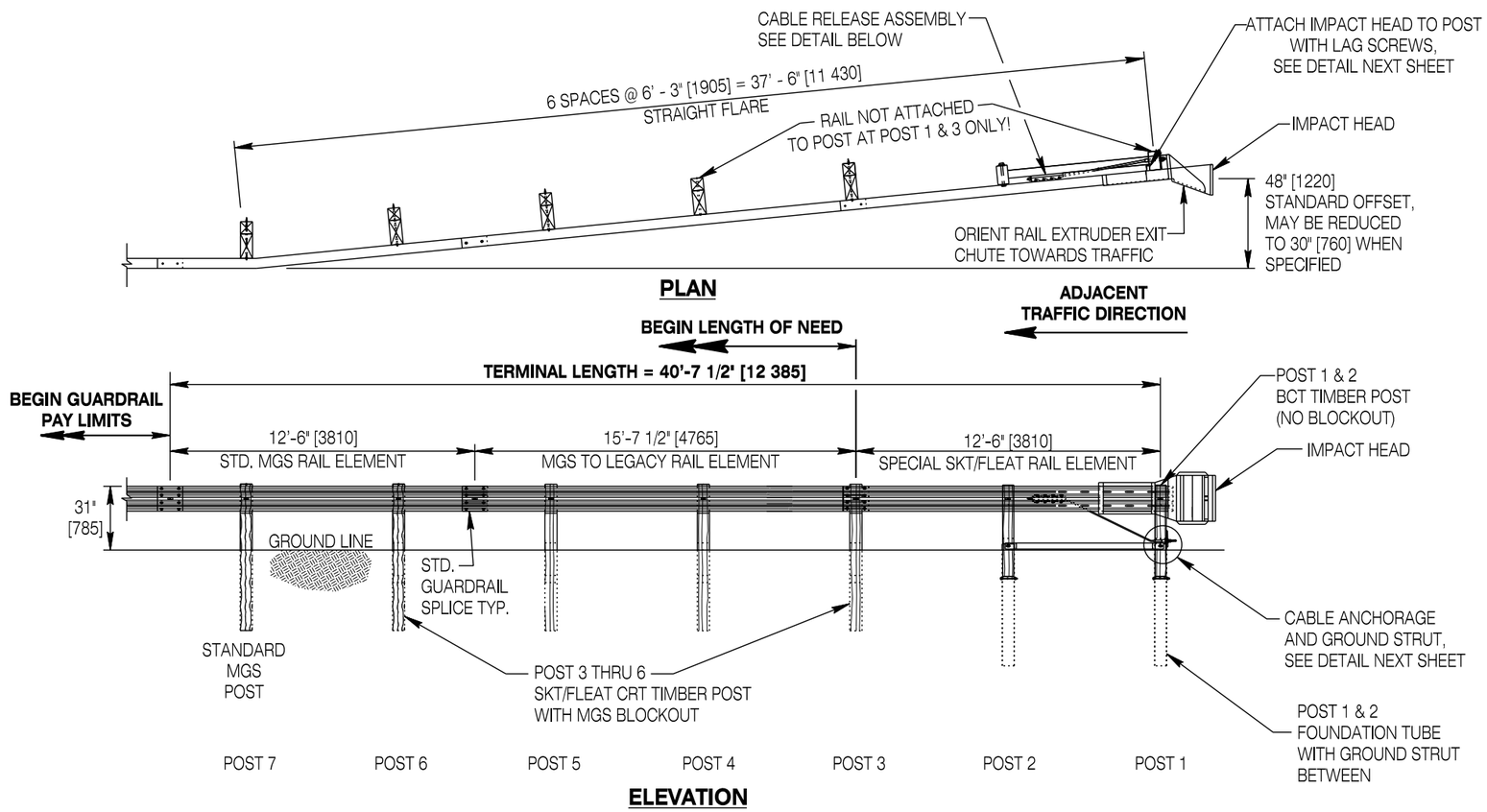

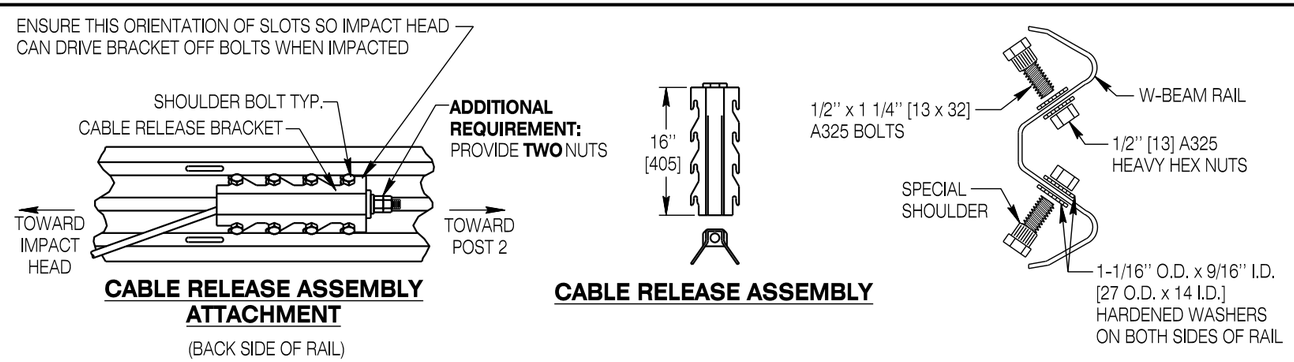

CABLE RELEASE ASSEMBLY DETAILS

NOTES

① The FLEAT MGS Terminal as shown herein is an acceptable option when "MGS Terminal Type II" is specified unless otherwise indicated in the contract.

The FLEAT MGS Terminal shown herein is proprietary and can only be manufactured and sold by Road Systems Inc. or its duly authorized representative.

Install in strict accordance to the manufacturer's installation manual and adhere to all warnings.

Any items shown as an "additional requirement" are over and above the manufacturer's standard product requirements.

Summary of additional requirements for the FLEAT MGS:

A. Double nut each end of the cable anchor to prevent loosening.

② Provide the offset flare of 4 ft. [1.2 m] shown herein applied to the tangent line of the adjacent run of guardrail whether flared or parallel to the roadway. The offset flare may be reduced to 2 1/2 ft. [0.8] when specified.

③ Lap the upstream rail (for the adjacent traffic direction) over the downstream rail element at each splice. See rail lap detail on SHEET 5.

④ Attach impact head to post 1 as shown. Do not provide rail attachment bolt at post 1. Ensure rail hole aligns with post hole at post 1. Provide rail/post bolt at post 3 to secure blockout only, but do not attach the rail to the blockout (post bolt head is behind the rail element at post 3 only.

⑤ Drive soil tubes with an approved driving head which does not deform tubes. If the tubes are placed in drilled holes, place and compact backfill in lifts to prevent settlement.

⑥ The foundation tubes should not protrude more than 4 in. [100] above ground line. Correct site grading when necessary as directed by the engineer.

⑦ Ensure the cable anchor assembly is taut. Use a locking device (vice grips or channel locking pliers) to prevent twisting or untwisting of the cable when tightening nuts.

⑧ Ensure all bolts, nuts, cable assemblies, cable anchors and bearing plates are galvanized or coated to prevent corrosion.

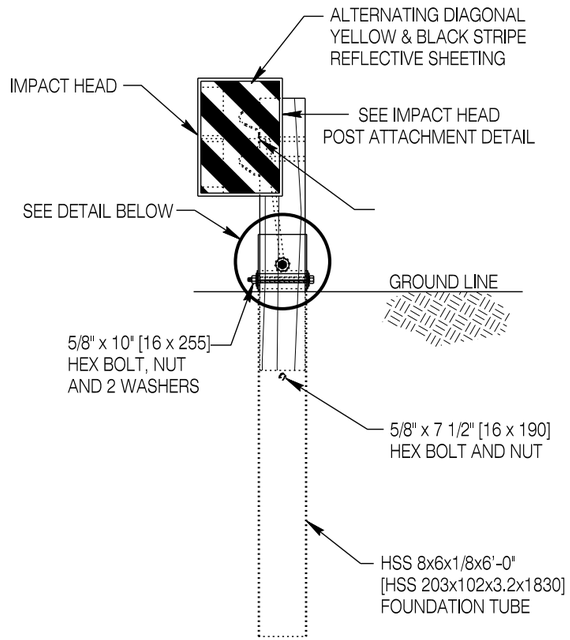

POST 1

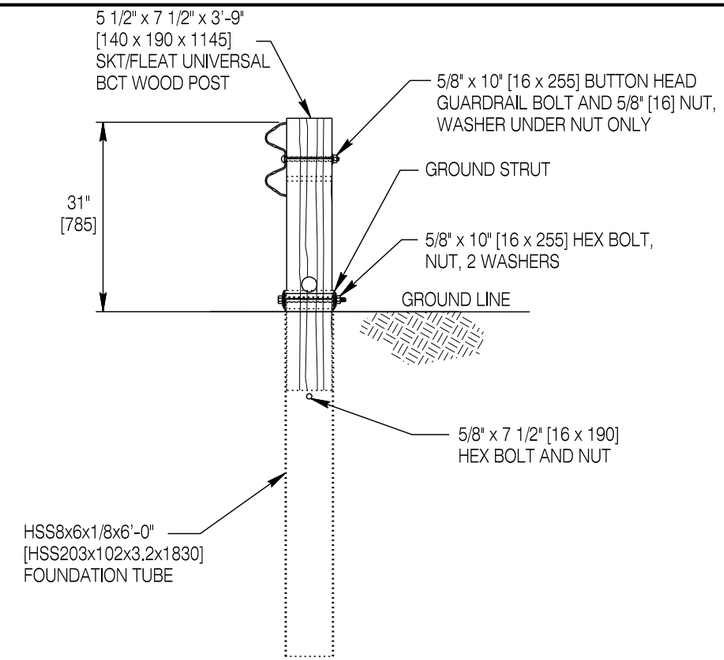

POST 2

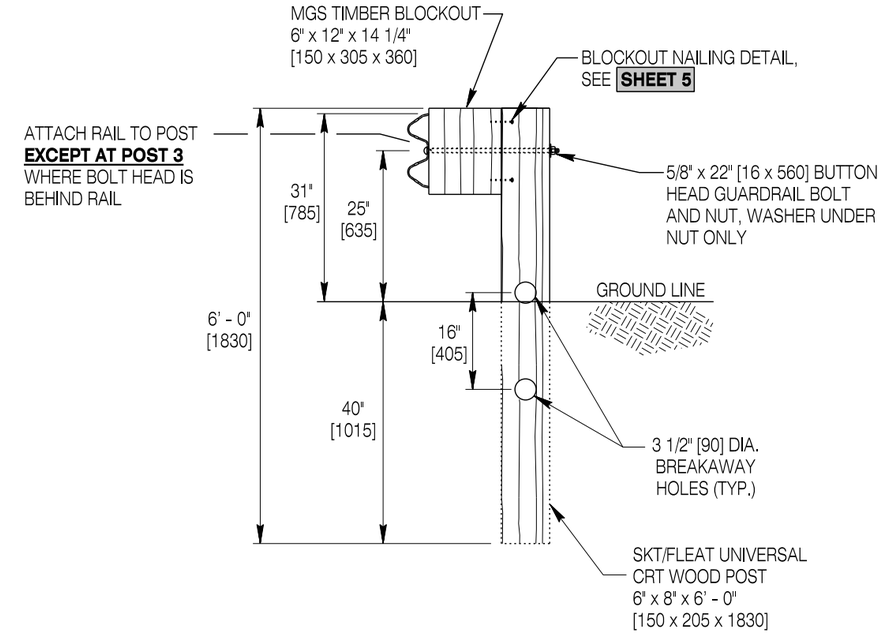

POST 3 THRU 8

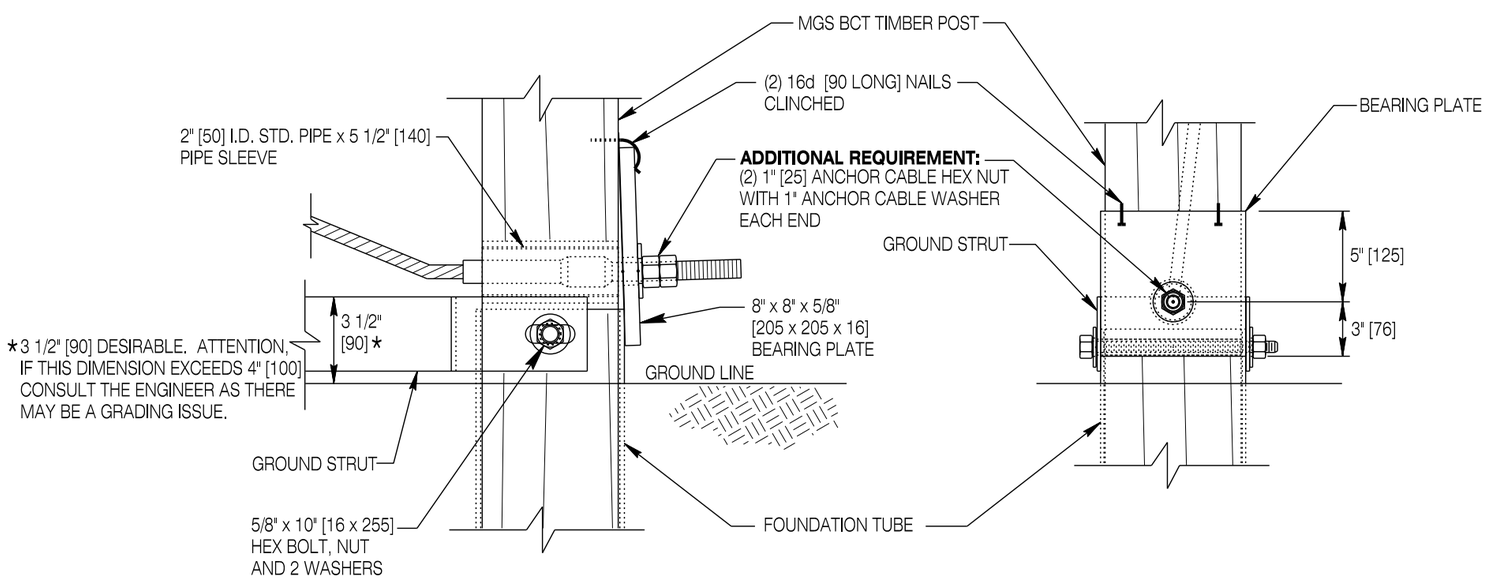

CABLE ANCHORAGE AND GROUND STRUT DETAILS

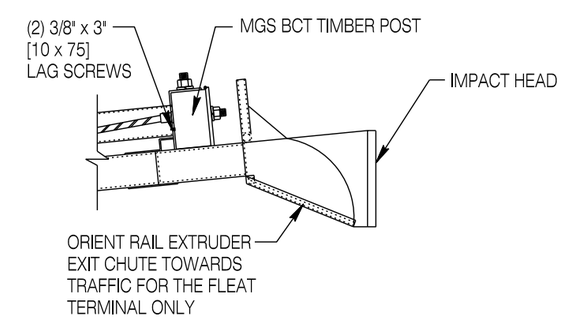

TOP VIEW

FLEAT IMPACT HEAD POST ATTACHMENT DETAIL

Designed by: WBW Drawn by: JK Checked by: WBW Previous Dwg. No. NEW	TERMINAL TYPE II (OPTION 1 - FLEAT MGS, SHEET 2 OF 2)	WYOMING DEPARTMENT OF TRANSPORTATION	MGS GUARDRAIL STANDARD PLAN
	Note: Units shown in brackets [ ] are metric and are in millimeters (mm) unless other units are shown.		STANDARD PLAN NUMBER 606-2 SHEET 15 of 18 Issued by: ENGINEERING SERVICES Date Issued: OCTOBER 2013

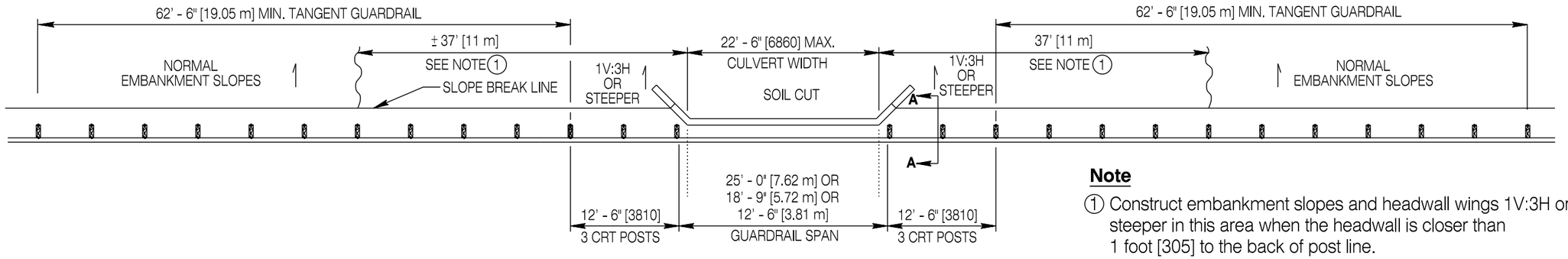

PLAN VIEW

Note

1 Construct embankment slopes and headwall wings 1V:3H or steeper in this area when the headwall is closer than 1 foot [305] to the back of post line.

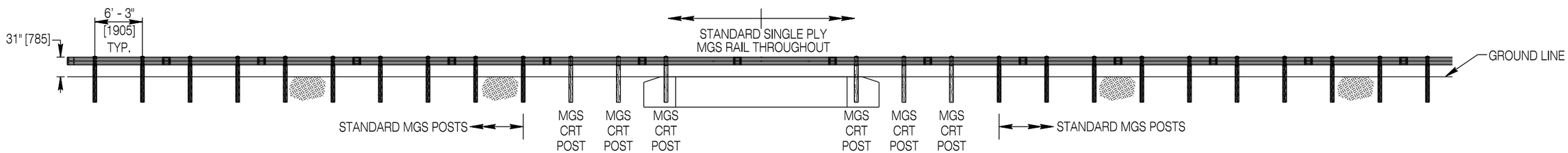

ELEVATION VIEW

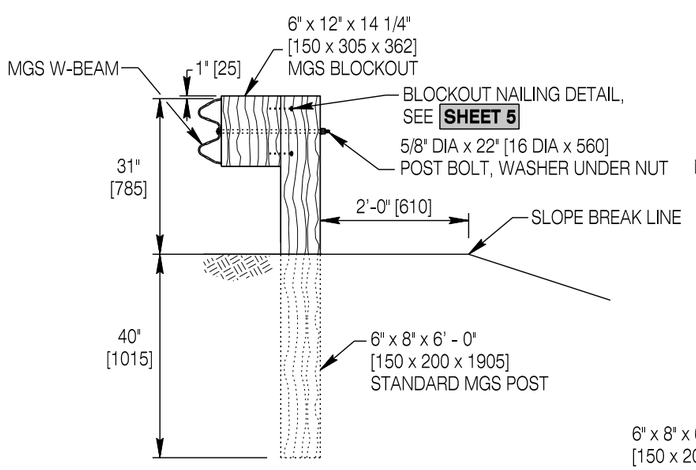

STANDARD MGS POST

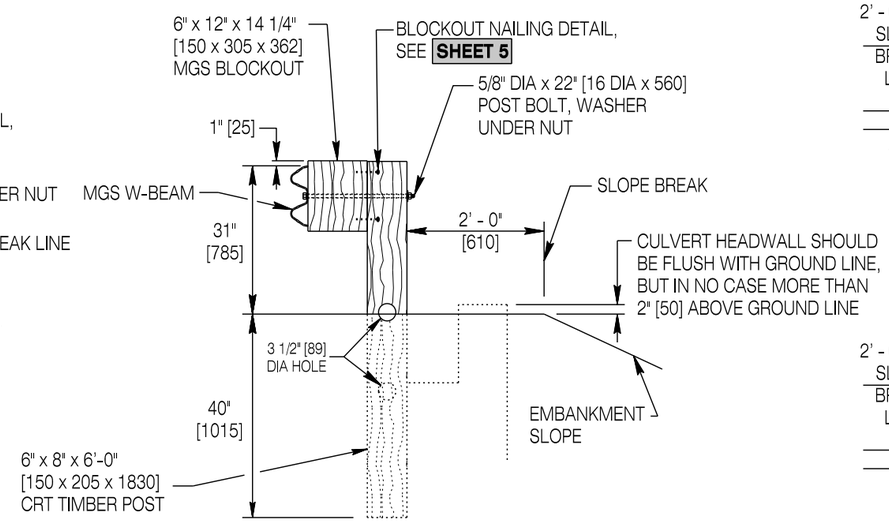

SECTION A-A
CRT POSTS TYP.

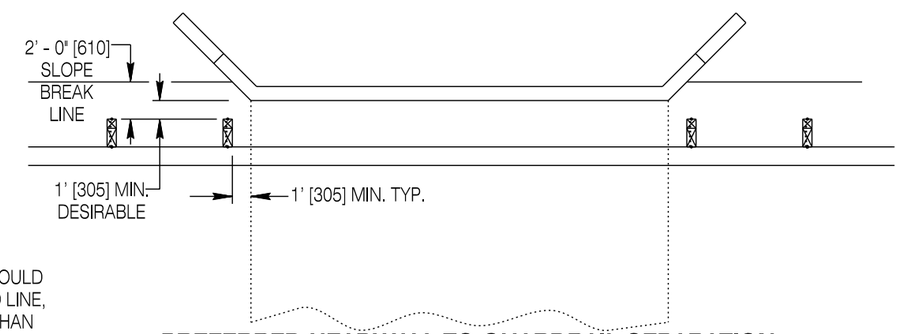

PREFERRED HEADWALL TO GUARDRAIL SEPARATION

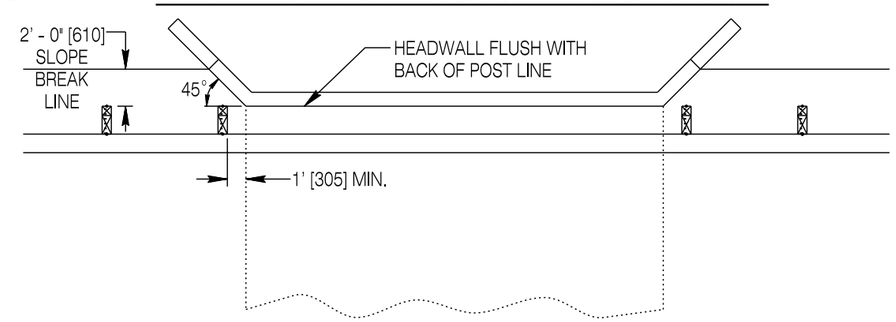

MINIMUM HEADWALL TO GUARDRAIL SEPERATION

Designed by: WBW	MGS LONG SPAN
Drawn by: JK	
Checked by: WBW	
Previous Dwg. No. NEW	

Note: Units shown in brackets [ ] are metric and are in millimeters (mm) unless other units are shown.

WYOMING DEPARTMENT OF TRANSPORTATION

MGS GUARDRAIL

STANDARD PLAN

STANDARD PLAN NUMBER
606-2
SHEET 16 of 18
Issued by: ENGINEERING SERVICES
Date Issued: OCTOBER 2013

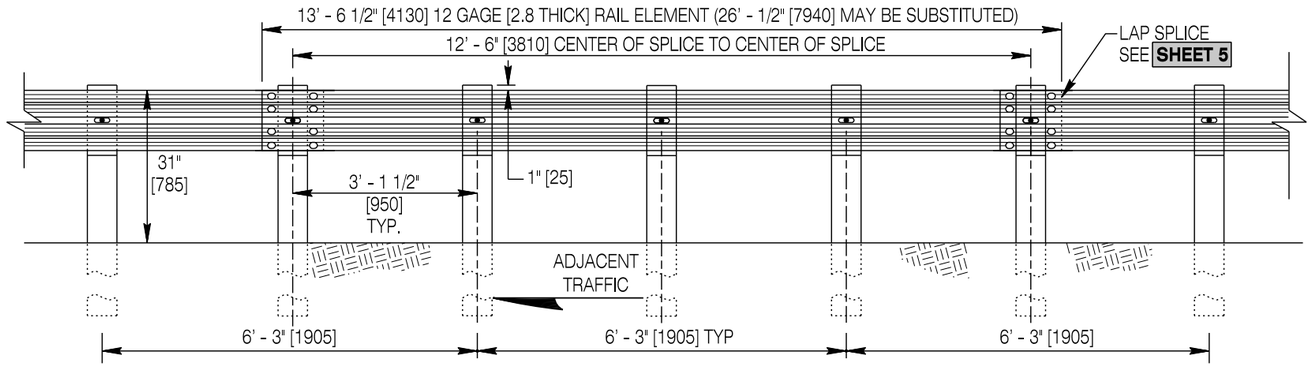

MGS HALF POST SPACING

Use standard 6' - 0" [1830] long posts, wood or steel unless specified otherwise.
Working width = 4' - 0" [1.2 m].

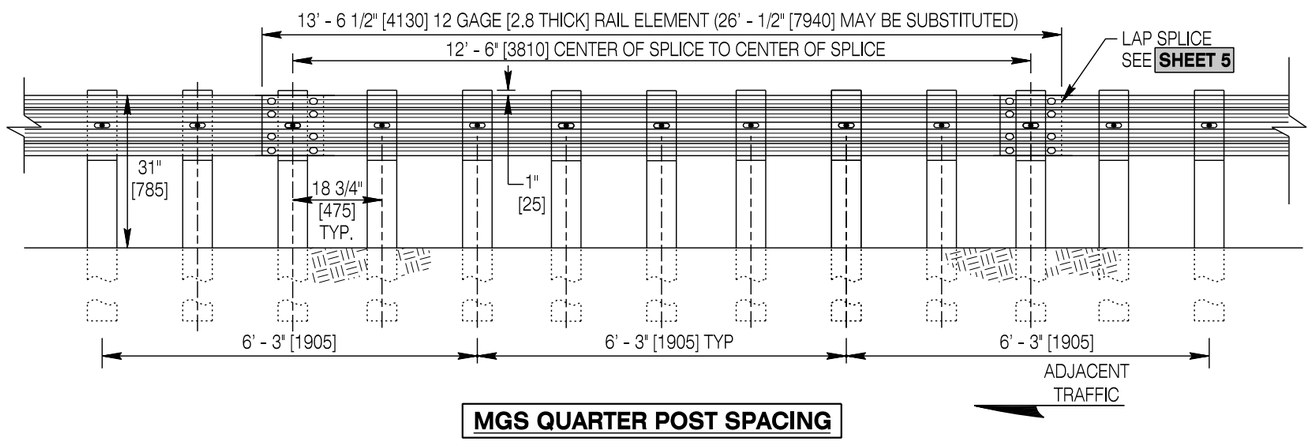

MGS QUARTER POST SPACING

Use standard 6' - 0" [1830] long posts, wood or steel unless specified otherwise.
Factory punch holes at quarter post spacing.
Working width = 3' - 0" [0.9 m].

GENERAL NOTE

① Requirements on SHEET 5 apply herein except where in conflict with these details.

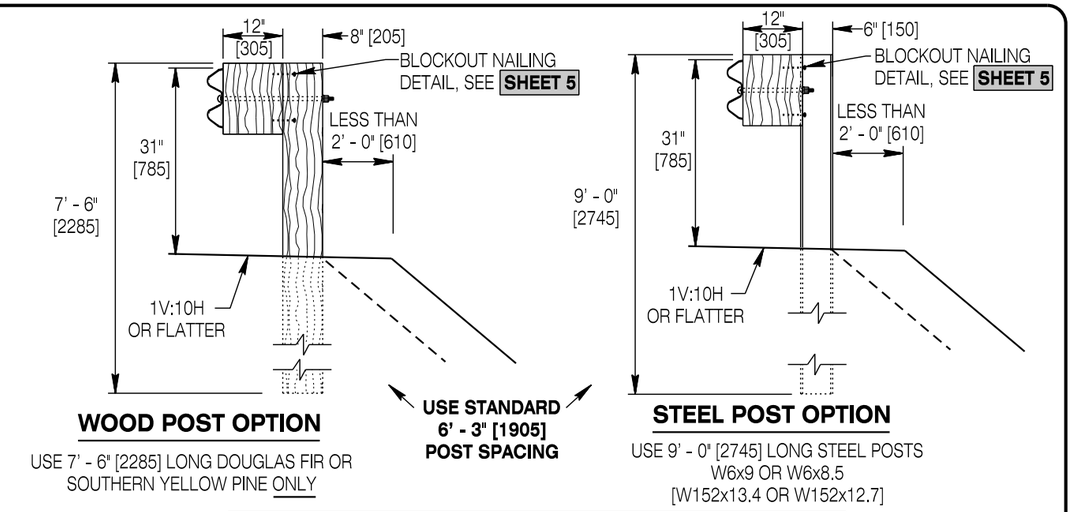

WOOD POST OPTION

USE 7' - 6" [2285] LONG DOUGLAS FIR OR SOUTHERN YELLOW PINE ONLY

STEEL POST OPTION

USE 9' - 0" [2745] LONG STEEL POSTS
W6x9 OR W6x8.5
[W152x13.4 OR W152x12.7]

MGS LONG POST - CONSTRICTED SLOPE GRADING

For locations where the slope break point is less than 2'-0" [610] behind the guardrail posts.

STANDARD GUARDRAIL BOLTS

*DESIGNATOR	
FBB03	5/8" x 10" [16 x 255] BUTTON HEAD GUARDRAIL BOLT WITH WASHER UNDER NUT
FBB04	5/8" x 18" [16 x 455] BUTTON HEAD GUARDRAIL BOLT WITH WASHER UNDER NUT
FWC16a	ROUND WASHER FOR 5/8" [16] GUARDRAIL BOLT

* TASK FORCE13 STANDARD BARRIER GUIDE

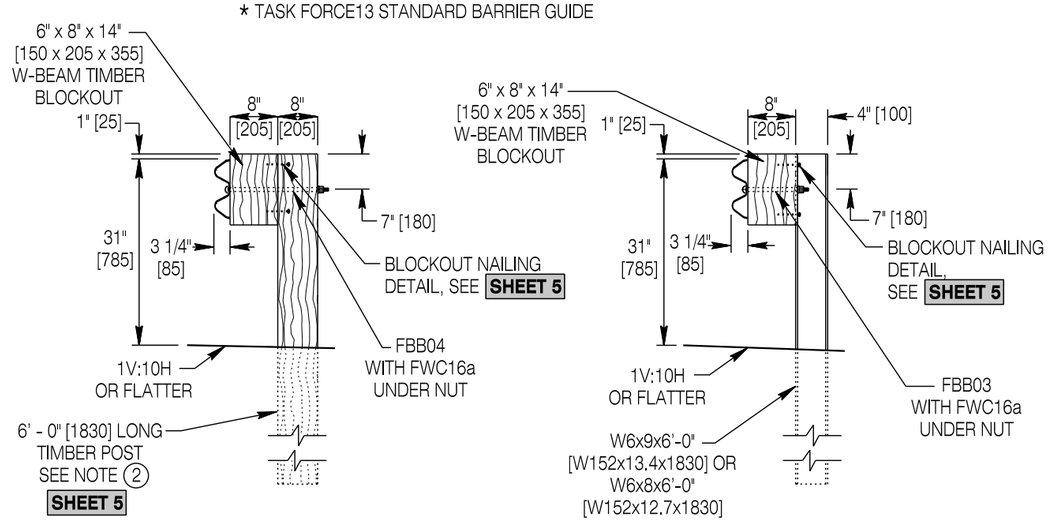

WOOD POST OPTION **STEEL POST OPTION**

MGS 8" [205] BLOCKS

To be used only on narrow roadways where 12" [305] block-outs will not fit!

Designed by: WBW	MGS HALF POST SPACING, MGS QUARTER POST SPACING, MGS LONG POST-CONSTRICTED SLOPE GRADING, MGS 8" [205] BLOCKS
Drawn by: JK	
Checked by: WBW	
Previous Dwg. No. NEW	

Note: Units shown in brackets [ ] are metric and are in millimeters (mm) unless other units are shown.

WYOMING DEPARTMENT OF TRANSPORTATION

MGS GUARDRAIL

STANDARD PLAN

STANDARD PLAN NUMBER
606-2
SHEET 17 of 18
Issued by: ENGINEERING SERVICES
Date Issued: OCTOBER 2013

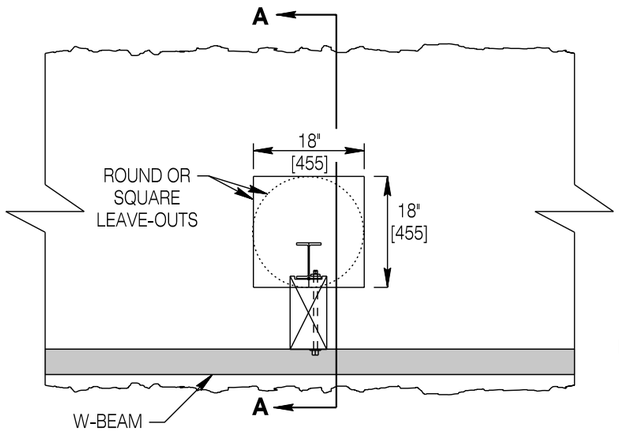

PLAN VIEW

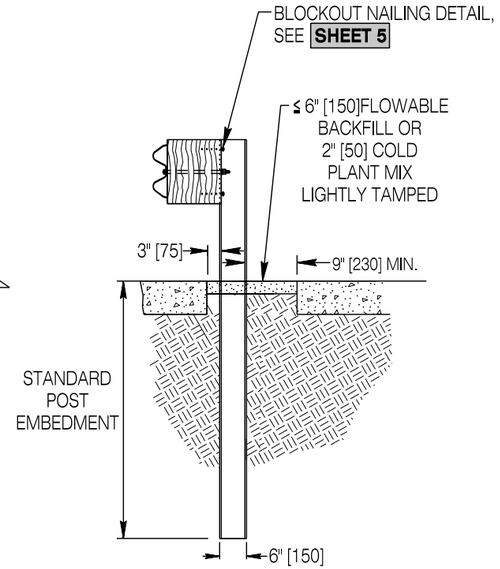

SECTION A-A

STEEL POST DETAIL

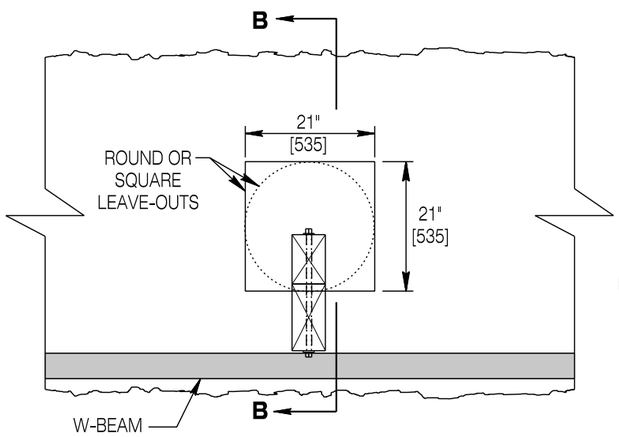

PLAN VIEW

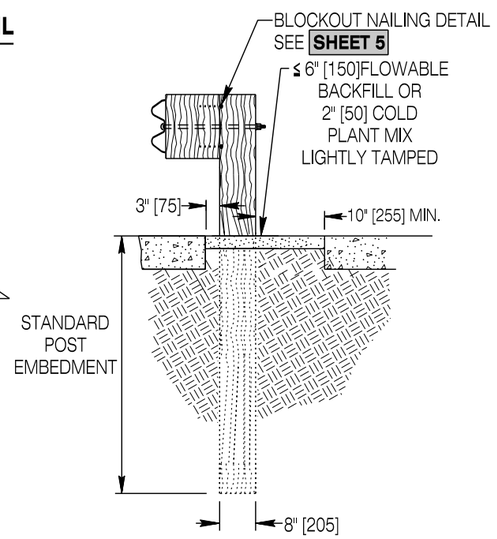

SECTION B-B

WOOD POST DETAIL

POST PLACEMENT IN ASPHALT OR CONCRETE PAVEMENTS

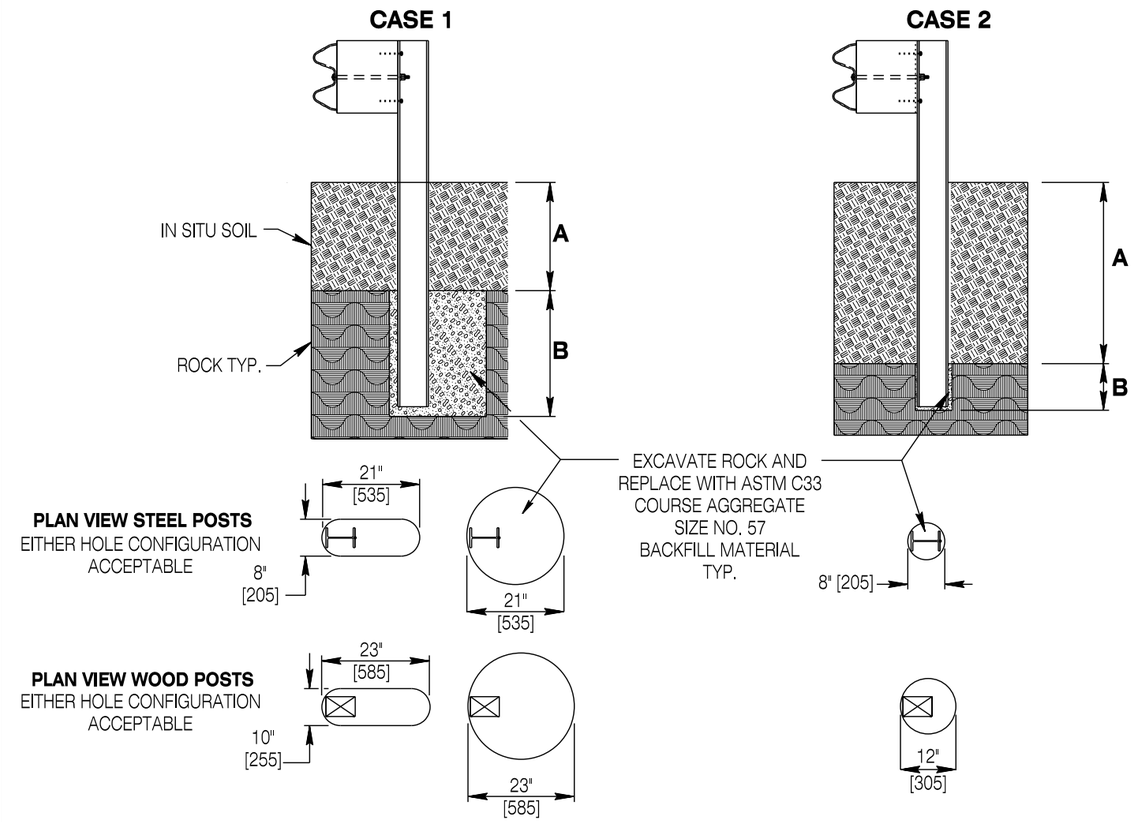

CASE 1 - A ≤ 18" [455]

For overlying soil depths (A) ranging from 0 to 18" [0 to 455], the depth of required drilling (B) is equal to 24" [610].

CASE 2 - A > 18" [455]

For overlying soil depths (A) ranging from > 18" [455], to the embedment depth of the post, depth of required drilling (B) is equal to either 12" [305] or the standard embedment depth minus the depth of soil which ever is less.

POSTS IN ROCK

Designed by: WBW	POST PLACEMENT IN PAVEMENTS AND ROCK
Drawn by: JK	
Checked by: WBW	
Previous Dwg. No. NEW	

Note: Units shown in brackets [ ] are metric and are in millimeters (mm) unless other units are shown.

WYOMING DEPARTMENT OF TRANSPORTATION

MGS GUARDRAIL

STANDARD PLAN

STANDARD PLAN NUMBER
606-2
SHEET 18 of 18
Issued by: ENGINEERING SERVICES
Date Issued: OCTOBER 2013

CORRUGATED BEAM FABRICATION STANDARD SHEETS

INDEX OF SHEETS

1. MGS Rail End Sections and Hole Details
2. Standard Rail Elements
3. Transition Rail Elements
4. Special MGS SKT, FLEAT and ET-31 Rail Elements
5. Post Details
6. Block-outs and Reflective Tab
7. Transition A & B SBR Connectors
8. Transition A & B Lower Angle Assembly
9. Transition A Upper Angle Assembly
10. Transition B Upper Angle Assembly
11. Transition C Connector Plate
12. Transition C Connector Plate (Con't.)
13. Transition D Connector Plate
14. Transition D Connector Plate (Con't.)

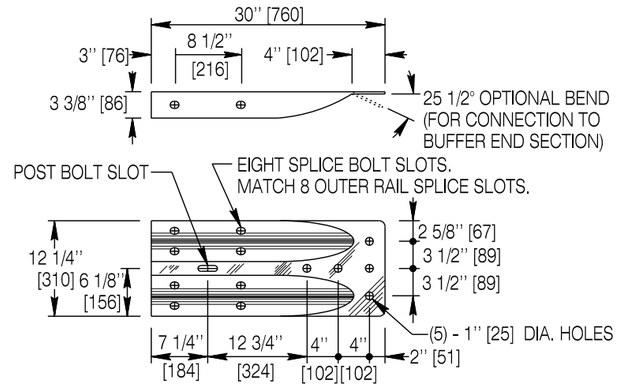

W-BEAM CONNECTOR (END SHOE)

10 Gauge [3.5 Thick]

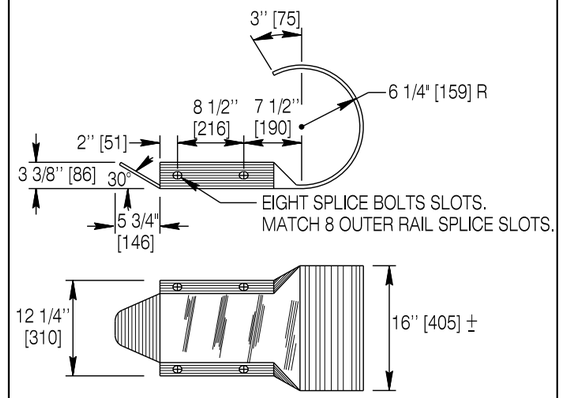

ROUNDED END SECTION

10 Gauge [3.5 Thick]

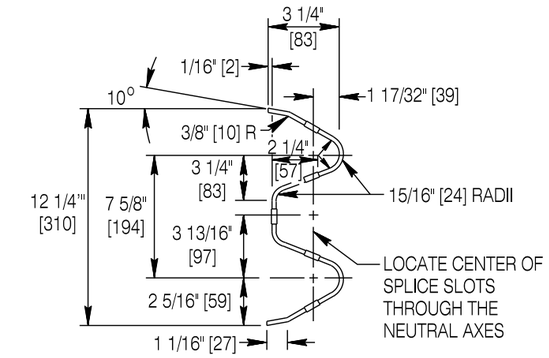

W-BEAM SECTION VIEW

12-Gauge [2.8 Thick] unless otherwise specified.

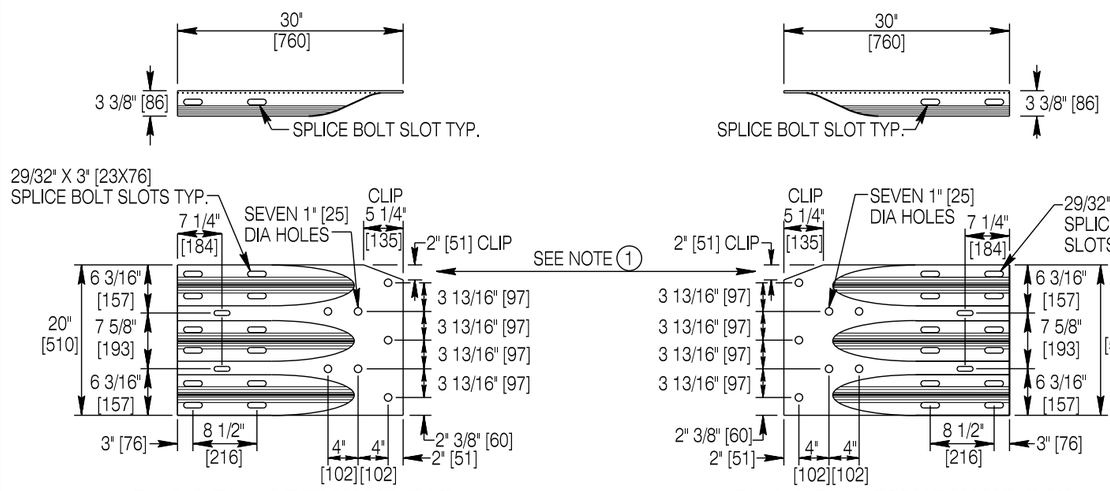

TL-3 & TL-4 LEFT HAND RAIL **TL-3 & TL-4 RIGHT HAND RAIL**

THRIE BEAM CONNECTOR (END SHOE)

10 Gauge [3.5 Thick]

NOTE: 1 Clip the corners as shown, **only** when connecting to WYDOT's TL-3 (uses two, 2" x 6" [51 x 152] rails) Steel Tube Bridge Rail.

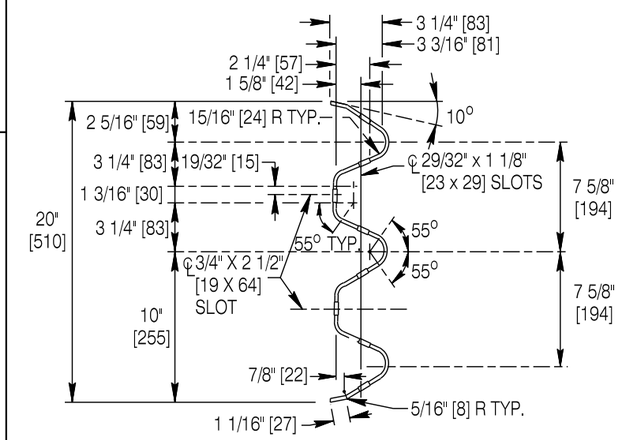

THRIE-BEAM SECTION VIEW

12-Gauge [2.8 Thick] unless otherwise specified.

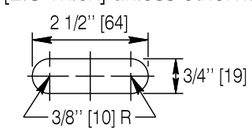

TYPICAL POST BOLT SLOT

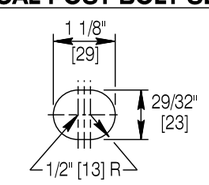

TYPICAL SPLICE BOLT SLOT

STANDARD CORRUGATED BEAM DETAILS

Designed by: WBW	MGS RAIL END SECTIONS AND HOLE DETAILS
Drawn by: JK	
Checked by: WBW	
Previous Dwg. No. NEW	

Note: Units shown in brackets [ ] are metric and are in millimeters (mm) unless other units are shown.

WYOMING DEPARTMENT OF TRANSPORTATION

MGS FABRICATION STANDARDS

STANDARD PLAN

STANDARD PLAN NUMBER **606-3**

SHEET 1 of 14

Issued by: ENGINEERING SERVICES

Date Issued: OCTOBER 2013

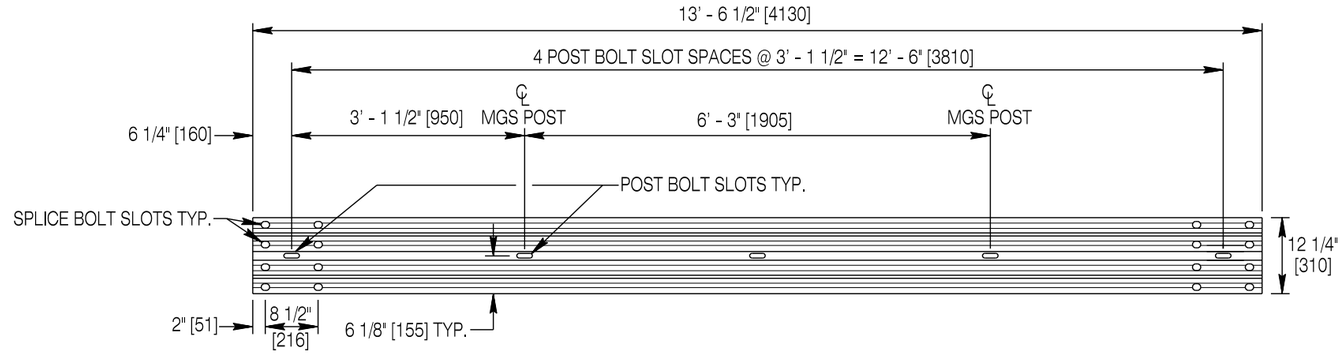

STANDARD MGS TWO POST BAY 12' - 6" [3810] W-BEAM RAIL

12 Gauge [2.8 Thick]

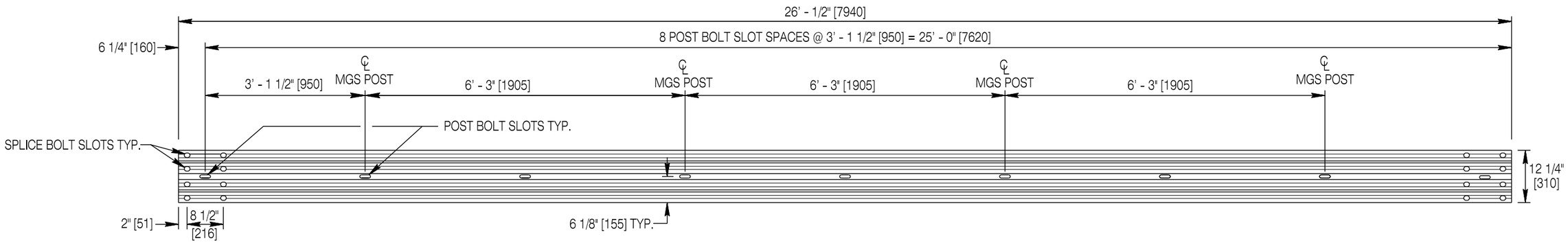

STANDARD MGS FOUR POST BAY 25' - 0" [7620] W-BEAM RAIL

12 Gauge [2.8 Thick]

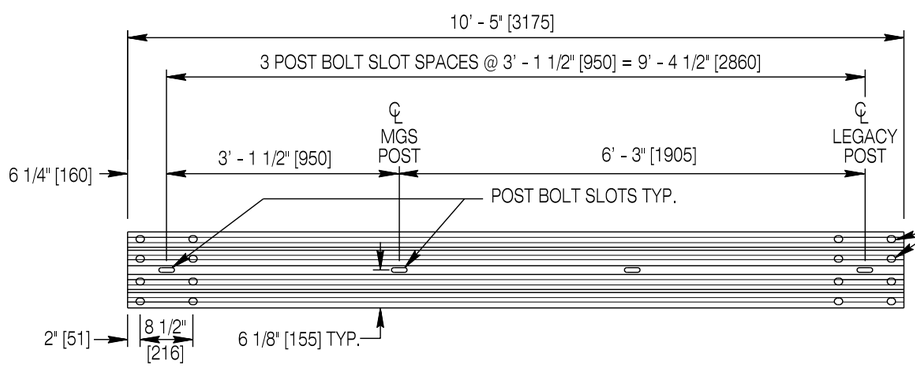

MGS TO LEGACY RAIL 9'-4 1/2" [2860] (1 1/2 STD. SPACE)

12 Gauge [2.8 Thick]

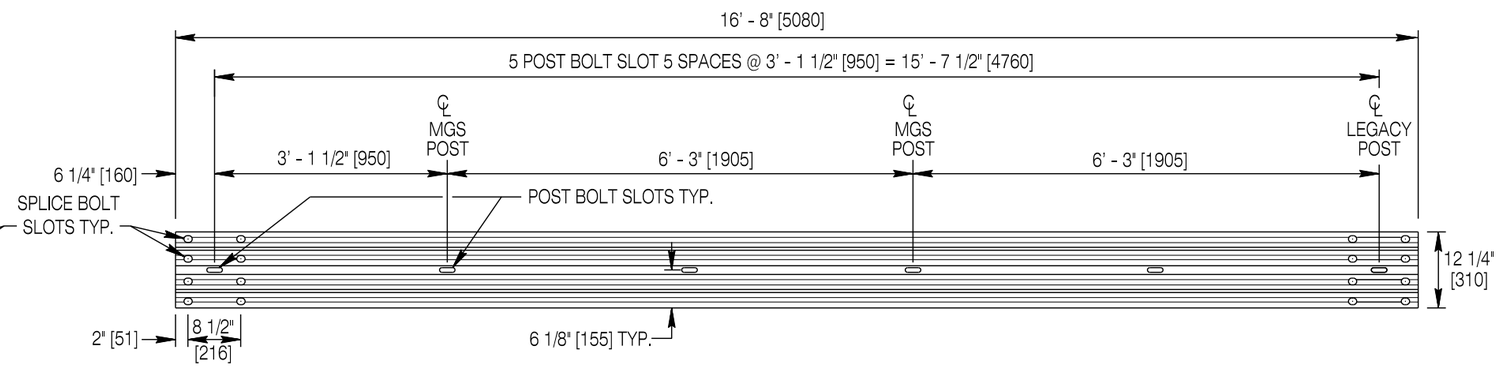

MGS TO LEGACY RAIL 15' - 7 1/2" [4760] (2 1/2 STD. SPACE)

12 Gauge [2.8 Thick]

Designed by: WBW	STANDARD RAIL ELEMENTS
Drawn by: JK	
Checked by: WBW	
Previous Dwg. No. NEW	

Note: Units shown in brackets [ ] are metric and are in millimeters (mm) unless other units are shown.

WYOMING DEPARTMENT OF TRANSPORTATION

MGS FABRICATION STANDARDS

STANDARD PLAN

STANDARD PLAN NUMBER **606-3**

SHEET 2 of 14

Issued by: ENGINEERING SERVICES

Date Issued: OCTOBER 2013

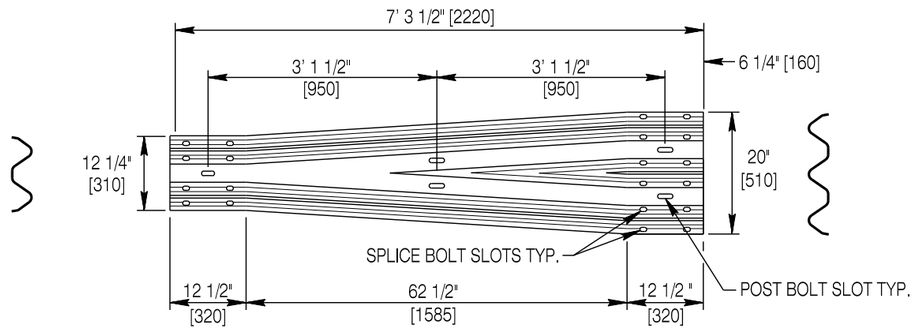

SYMMETRICAL TRANSITION RAIL

12 - Gauge [2.8] Thick

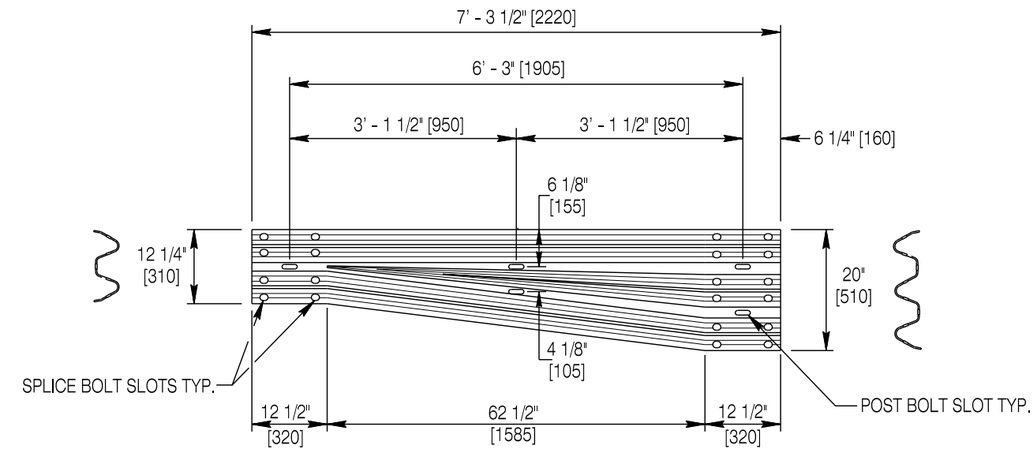

MGS ASYMMETRICAL RAIL

10 - Gauge [3.5] Thick

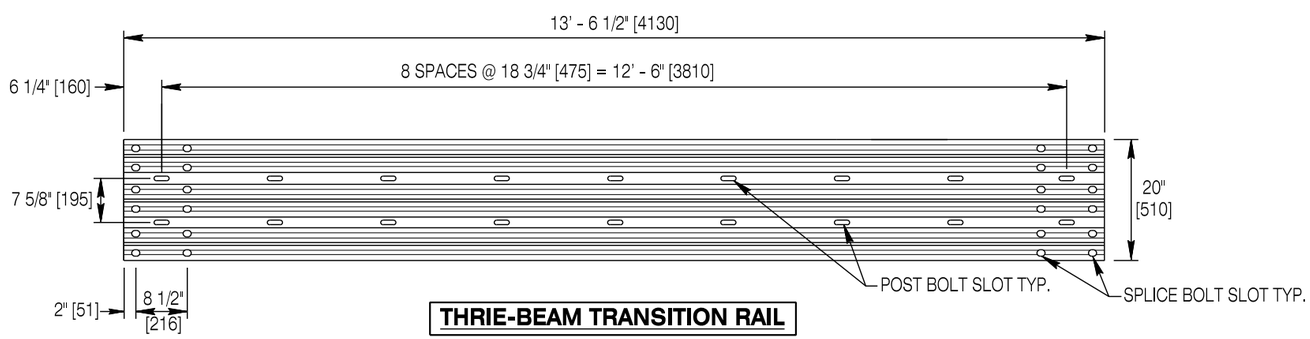

THRIE-BEAM TRANSITION RAIL

12 - Gauge [2.8] Thick

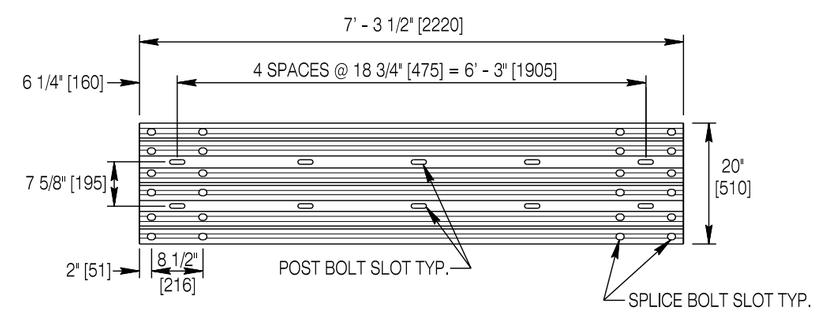

THRIE BEAM MGS SHORT TRANSITION RAIL

12 - Gauge [2.8] Thick

Designed by: WBW	TRANSITION RAIL ELEMENTS	WYOMING DEPARTMENT OF TRANSPORTATION	MGS FABRICATION STANDARDS
Drawn by: JK			STANDARD PLAN
Checked by: WBW			STANDARD PLAN NUMBER 606-3
Previous Dwg. No. NEW			SHEET 3 of 14
			Issued by: ENGINEERING SERVICES
			Date Issued: OCTOBER 2013

Note: Units shown in brackets [ ] are metric and are in millimeters (mm) unless other units are shown.

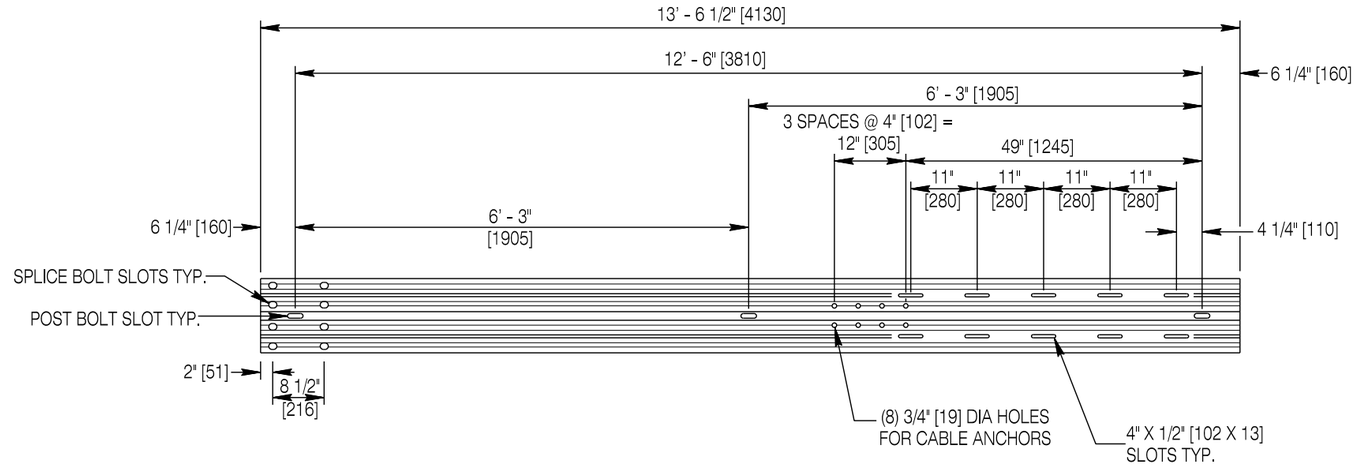

SPECIAL SKT/FLEAT RAIL ELEMENT (12' - 6" [3810])

This rail element is the first rail element in the FLEAT and SKT Terminals (POSTS 1 - 3).

Details shown above are approximate. The special SKT/FLEAT MGS Terminal rail element shown herein is proprietary and can only be manufactured and sold by Road Systems Inc. or its duly authorized representative.

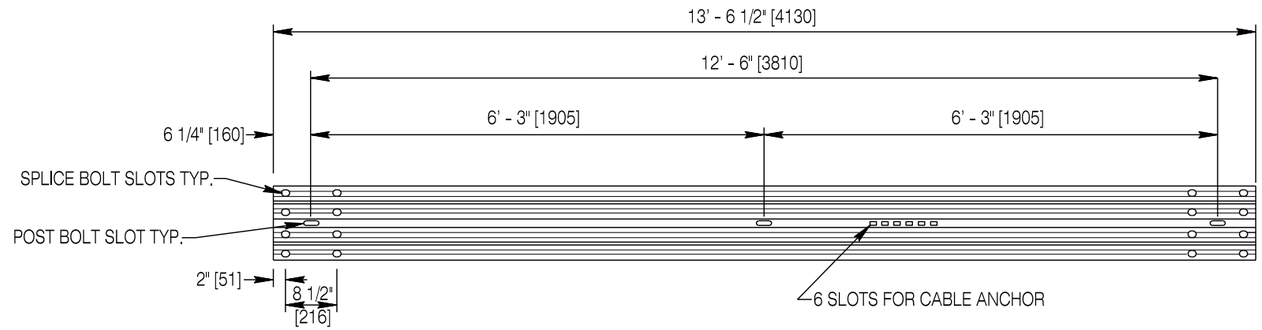

SPECIAL ET-31 RAIL ELEMENT (12' - 6" [3810])

This rail element is the first rail element in the ET-31 Terminal (Posts 1-3).

Details shown above are approximate. The special ET-31 Terminal rail element shown herein is proprietary and can only be manufactured and sold by Trinity Industries, Inc. or its duly authorized representative.

Designed by: WBW Drawn by: JK Checked by: WBW Previous Dwg. No. NEW	SPECIAL MGS SKT, FLEAT AND ET-31 RAIL ELEMENTS	WYOMING DEPARTMENT OF TRANSPORTATION	MGS FABRICATION STANDARDS STANDARD PLAN	STANDARD PLAN NUMBER 606-3 SHEET 4 of 14 Issued by: ENGINEERING SERVICES Date Issued: OCTOBER 2013

Note: Units shown in brackets [ ] are metric and are in millimeters (mm) unless other units are shown.

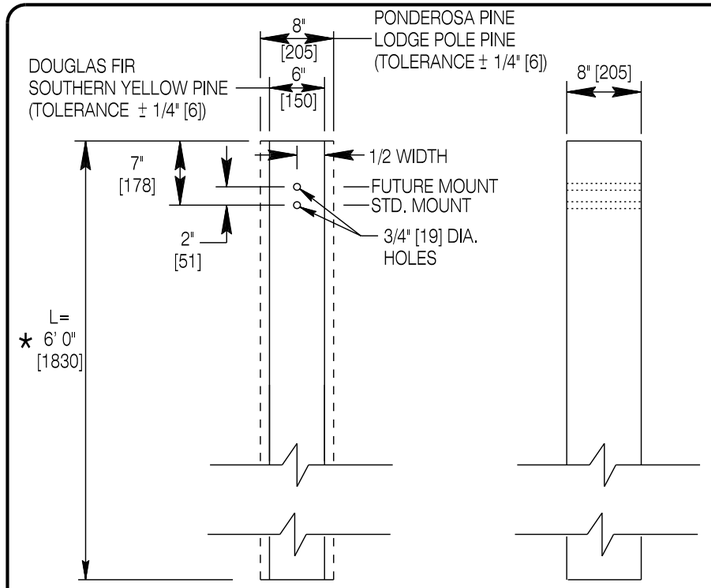

STANDARD MGS RECTANGULAR WOOD POST

Uses: Std. MGS Guardrail Post
Std. Legacy W-Beam Guardrail Post

*NOTE: For MGS Long Post, L=7 1/2 ft [2285]

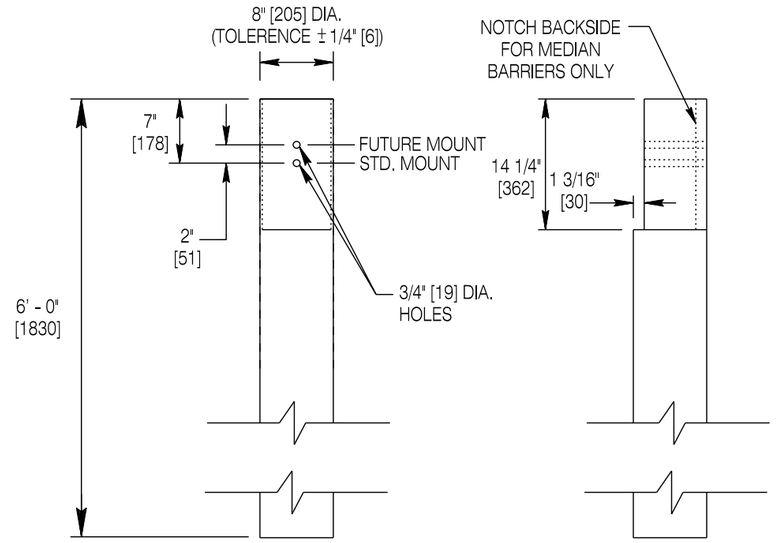

STANDARD MGS ROUND WOOD POST

Uses: Std. MGS Guardrail Post
Std. Legacy W-Beam Guardrail Post

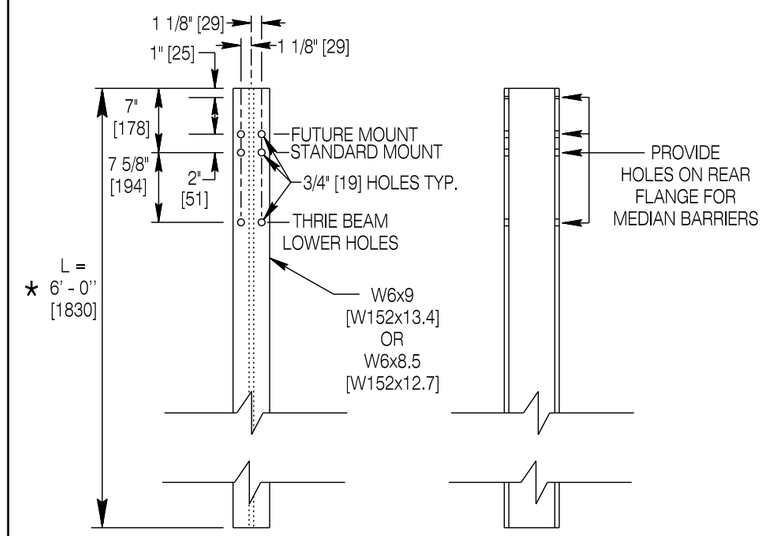

STANDARD MGS STEEL POST

Uses: Std. MGS Guardrail Post
Std. Legacy W-Beam Guardrail Post
MGS Transitions A-D, post T7-T12

*NOTE: For MGS Long Post, L=9 ft [2745]

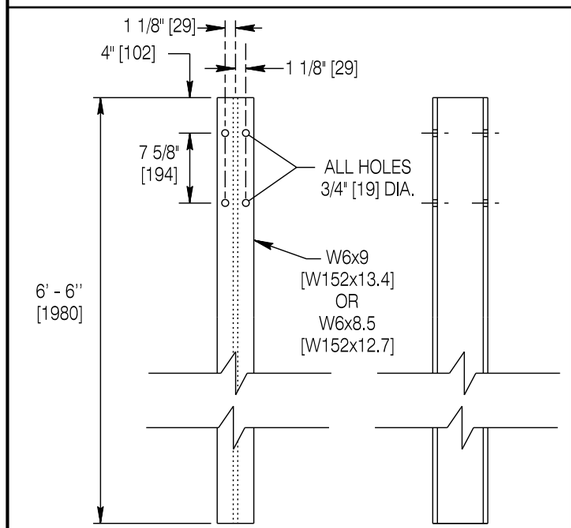

6' - 6" [1980] THRIE BEAM TRANSITION POST

Uses: Transitions A - D, Post T1 -T6

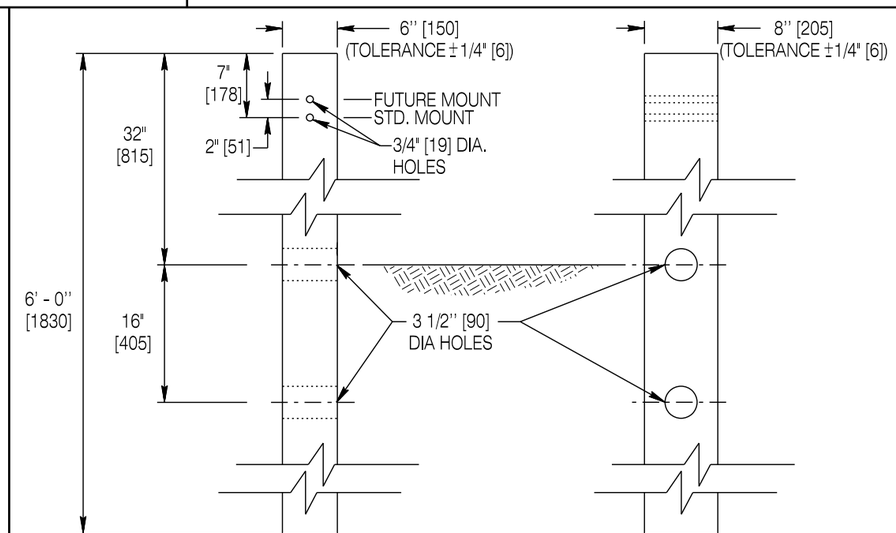

STANDARD MGS CRT WOOD POST

Southern Yellow Pine or Douglas Fir Only!

Designed by: WBW	POST DETAILS
Drawn by: JK	
Checked by: WBW	
Previous Dwg. No.: NEW	

Note: Units shown in brackets [ ] are metric and are in millimeters (mm) unless other units are shown.

WYOMING DEPARTMENT OF TRANSPORTATION

MGS FABRICATION STANDARDS

STANDARD PLAN

STANDARD PLAN NUMBER
606-3
SHEET 5 of 14
Issued by: ENGINEERING SERVICES
Date Issued: OCTOBER 2013

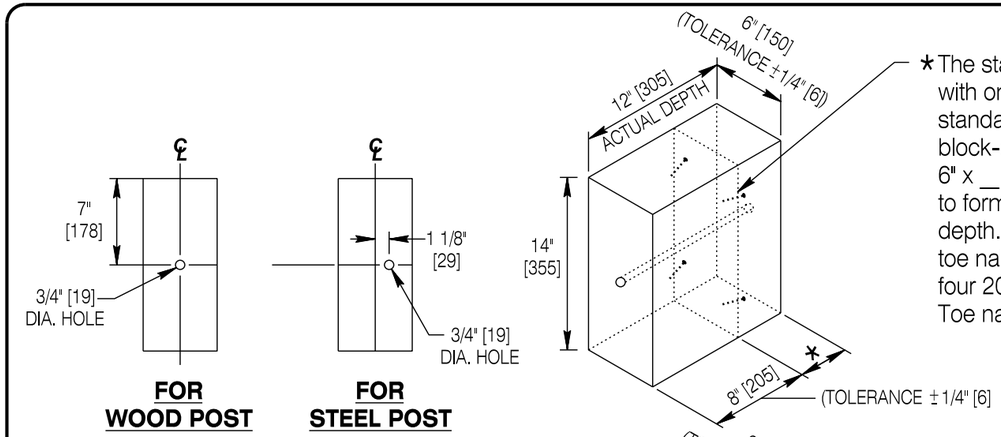

★The standard MGS block-out can be formed with one single piece of wood, or using a standard wood 6" x 8" x 14" [150 x 205 x 355] block-out and an additional block-out 6" x __ x 14" [150 x __ x 355] of sufficient depth to form a composite block-out 12" [305] actual depth. If a composite block-out is provided, toe nail the first block to the second block with four 20d [105 long] nails to prevent rotation. Toe nail block-outs to the post in a similar fashion.

STANDARD MGS BLOCK-OUT

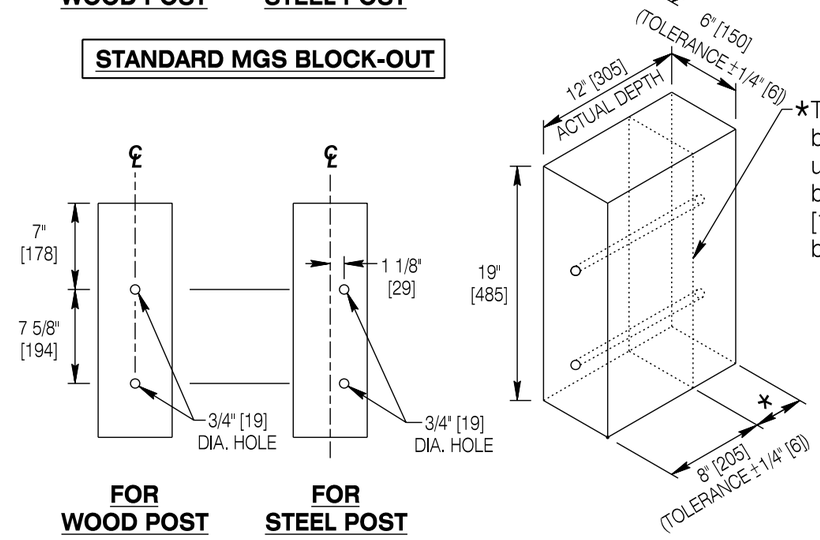

★The standard MGS Thrie-Beam block-out can be formed with one single piece of wood, or using a standard wood 6" x 8" x 19" [150 x 205 x 485] block-out and an additional block-out 6" x __ x 19" [150 x __ x 485] of sufficient depth to form a composite block-out 12" [305] actual depth.

MGS THRIE BEAM TRANSITION BLOCK-OUT

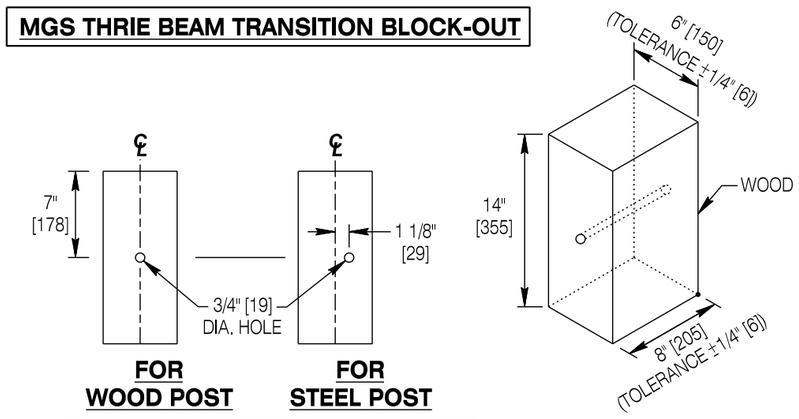

SPECIAL 8" [205] MGS BLOCK-OUT

COMPOSITE BLOCK-OUTS

One piece plastic composite blocks which have been crash tested to NCHRP 350 or MASH (2009), have FHWA Eligibility or Acceptance Letters and are of the same overall dimensions shown herein, may be substituted for wood blocks with steel posts only. Provide routing in blocks to prevent rotation on post. Attach reflective tabs to composite block-outs by pre-drilling block-outs and using three #8 Screws 11/4" [32] long.

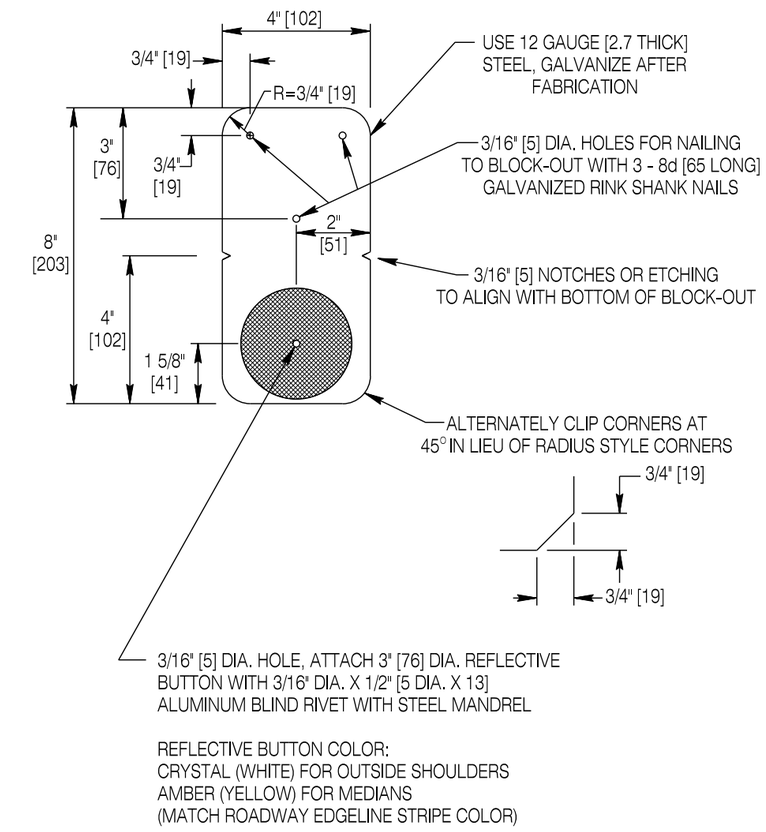

REFLECTIVE TAB

Attach to block-out every 25 ft [7.6 m] of guardrail.

Designed by: WBW	BLOCK-OUTS AND REFLECTIVE TAB
Drawn by: JK	
Checked by: WBW	
Previous Dwg. No. NEW	

Note: Units shown in brackets [ ] are metric and are in millimeters (mm) unless other units are shown.

WYOMING DEPARTMENT OF TRANSPORTATION

MGS FABRICATION STANDARDS

STANDARD PLAN

STANDARD PLAN NUMBER
606-3
SHEET 6 of 14
Issued by: ENGINEERING SERVICES
Date Issued: OCTOBER 2013

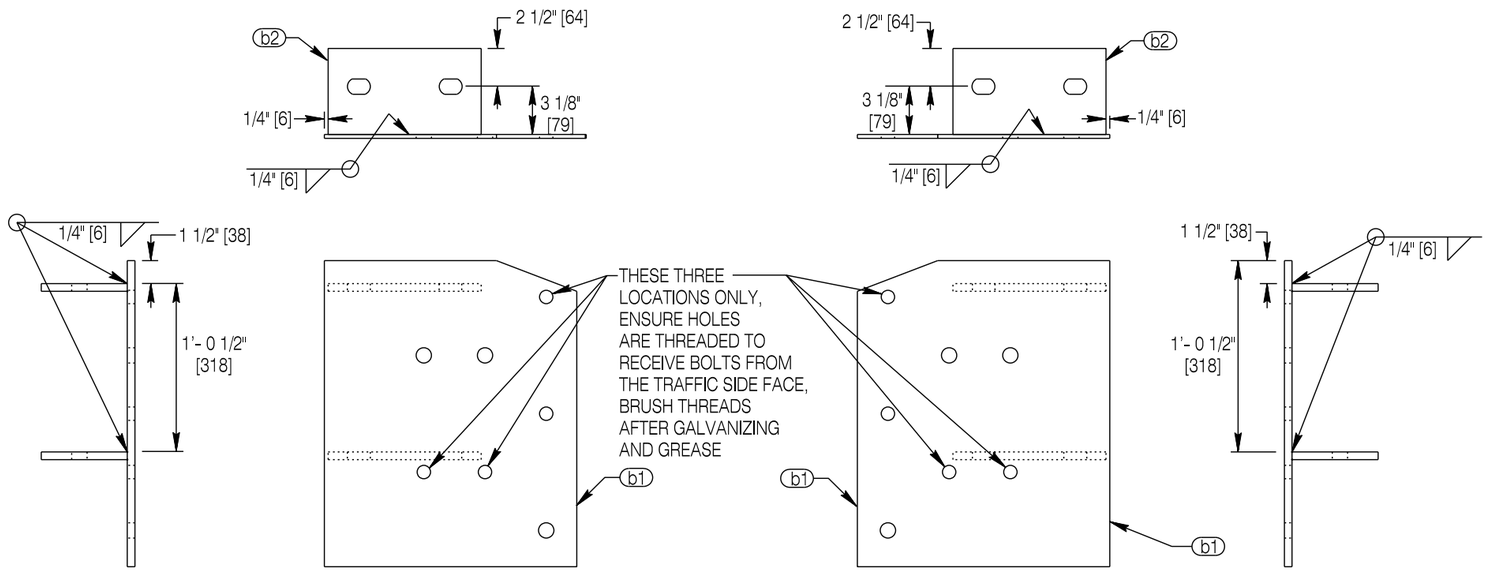

BL - TL-3 SBR CONNECTOR (LEFT HAND RAIL) BACKSIDE

TL-3

BR - TL-3 SBR CONNECTOR (RIGHT HAND RAIL) BACKSIDE

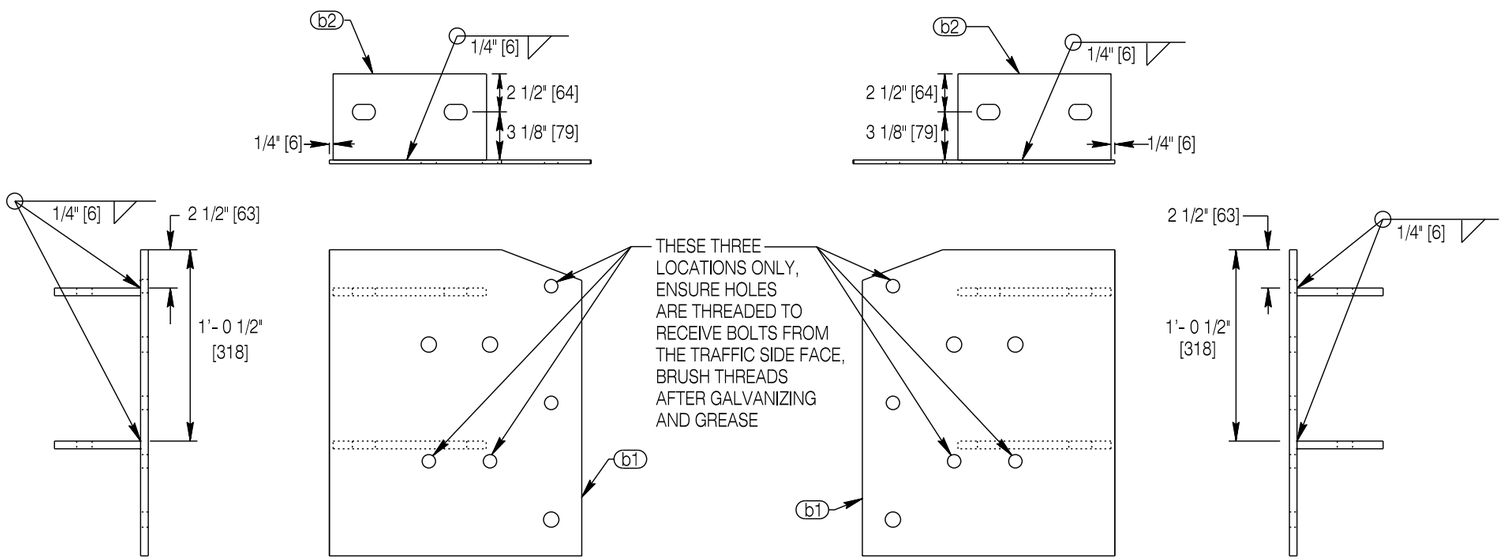

BL - TL-4 CONNECTOR (LEFT HAND RAIL) BACKSIDE

TL-4

BR - TL-4 SBR CONNECTOR (RIGHT HAND RAIL) BACKSIDE

ITEM	QTY	DESCRIPTION	MATERIAL
AL/AT	1	THRIE-BEAM END SHOE	10 GAGE
BL/BR	1	MOUNTING PLATE	
b1	1	FACE PLATE	1/2" [13] A36 PLATE
b2	2	BACK PLATE	1/2" [13] A36 PLATE

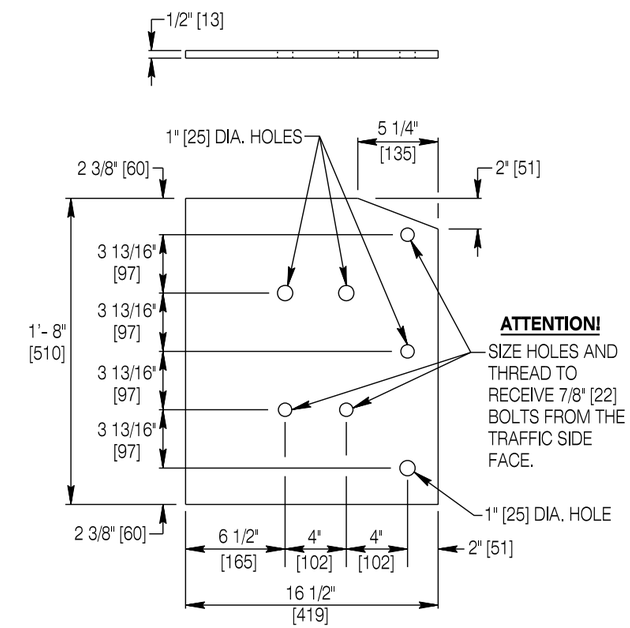

b1 - FACE PLATE

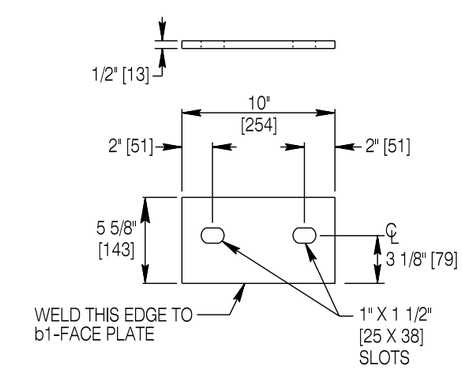

b2 - BACK PLATE

Designed by: WBW	TRANSITION A & B SBR CONNECTORS
Drawn by: JK	
Checked by: WBW	
Previous Dwg. No. NEW	

Note: Units shown in brackets [ ] are metric and are in millimeters (mm) unless other units are shown.

WYOMING DEPARTMENT OF TRANSPORTATION

MGS FABRICATION STANDARDS

STANDARD PLAN

STANDARD PLAN NUMBER **606-3**

SHEET 7 of 14

Issued by: ENGINEERING SERVICES

Date Issued: OCTOBER 2013

ITEM	QTY	DESCRIPTION	MATERIAL
	1	LOWER ANGLE ASSEMBLY	
c1	1	LOWER ANGLE PLATE	3/8" [10] A36 PLATE
c2	1	GUSSET	1/4" [6] A36 PLATE

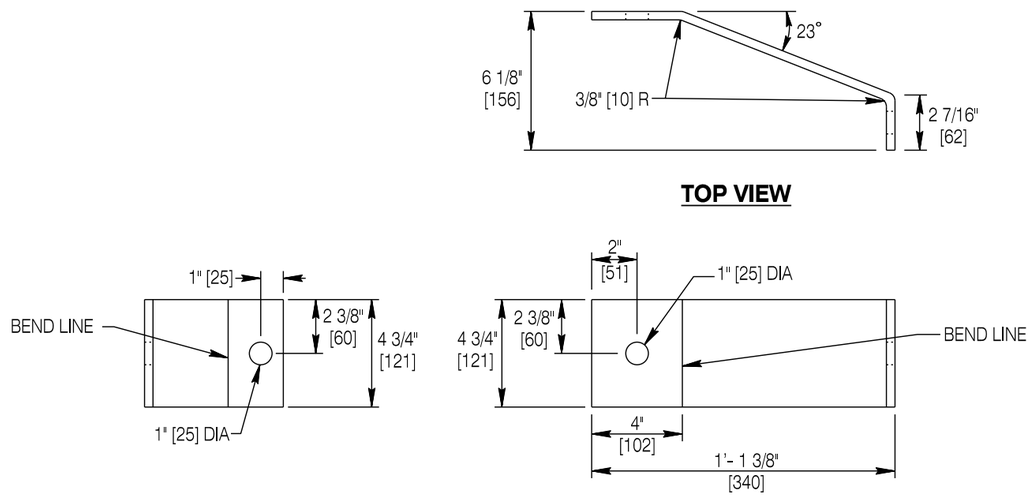

c1 - LOWER ANGLE PLATE

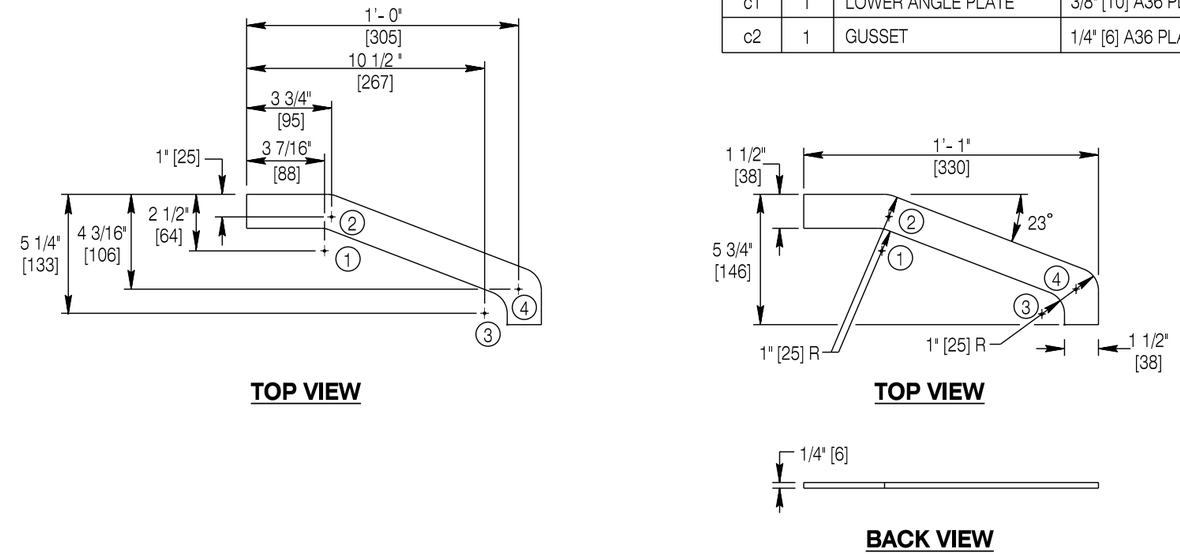

c2 - GUSSET

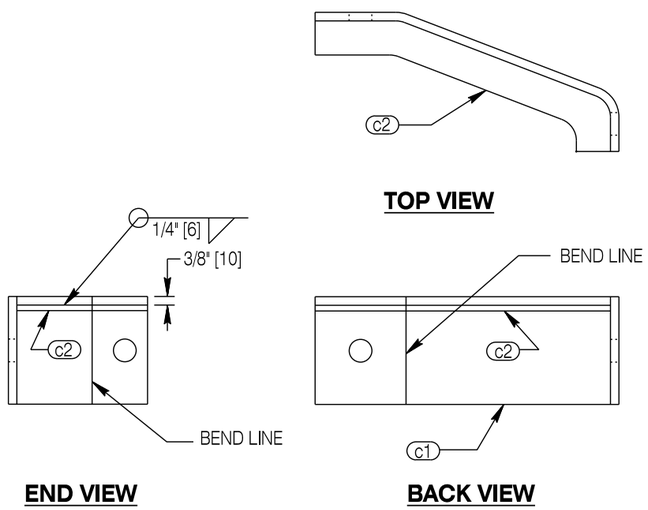

LOWER ANGLE ASSEMBLY
(LEFT HAND TRANSITION)

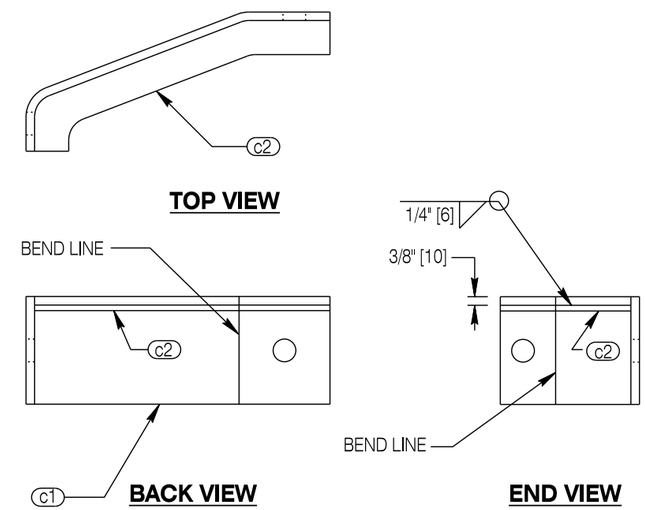

LOWER ANGLE ASSEMBLY
(RIGHT HAND TRANSITION)

Designed by: WBW	TRANSITION A & B LOWER ANGLE ASSEMBLY
Drawn by: JK	
Checked by: WBW	
Previous Dwg. No. NEW	

Note: Units shown in brackets [ ] are metric and are in millimeters (mm) unless other units are shown.

WYOMING DEPARTMENT OF TRANSPORTATION

MGS FABRICATION STANDARDS

STANDARD PLAN

STANDARD PLAN NUMBER
606-3
SHEET 8 of 14
Issued by: ENGINEERING SERVICES
Date Issued: OCTOBER 2013

ITEM	QTY	DESCRIPTION	MATERIAL
c2	2	SEE LOWER ASSEMBLY SHEET	
	1	UPPER ANGLE ASSEMBLY	
d1L/d1R	1	UPPER ANGLE PLATE	3/8" [10] A36 PLATE

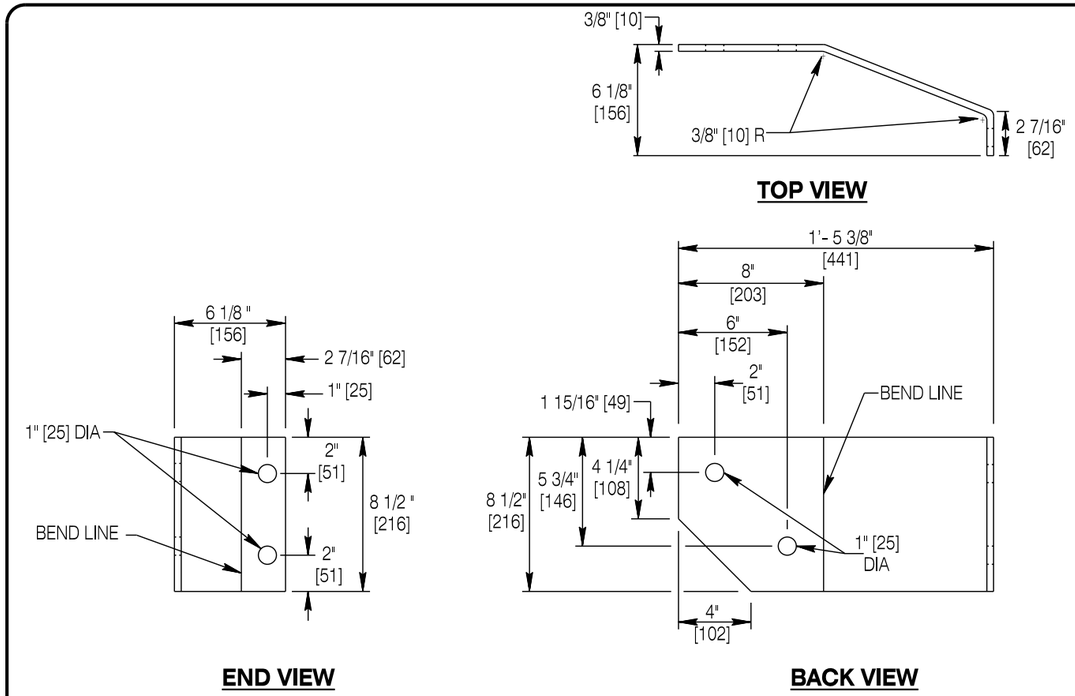

d1L - UPPER ANGLE PLATE (LEFT HAND TRANSITION)

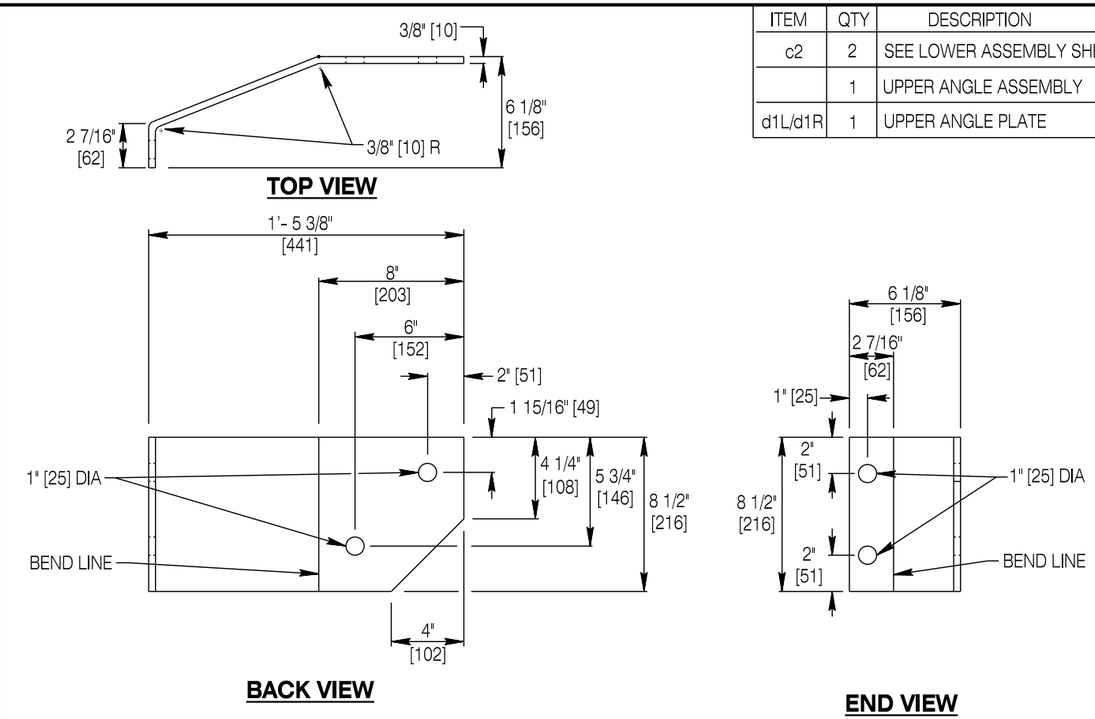

d1R- UPPER ANGLE PLATE (RIGHT HAND TRANSITION)

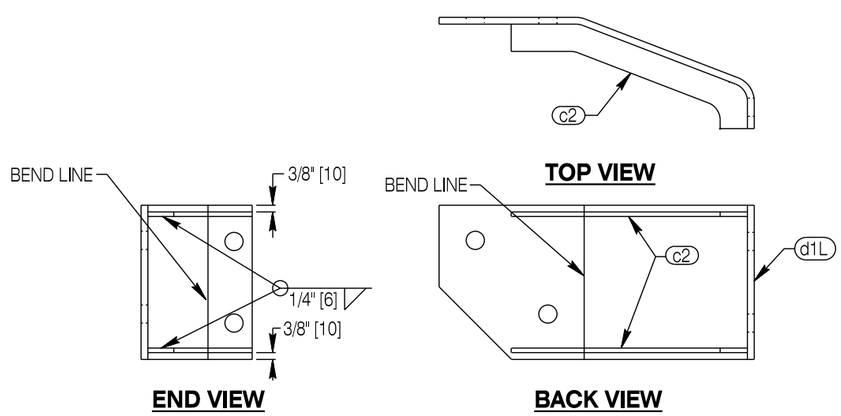

TL-3 UPPER ANGLE ASSEMBLY (LEFT HAND TRANSITION)

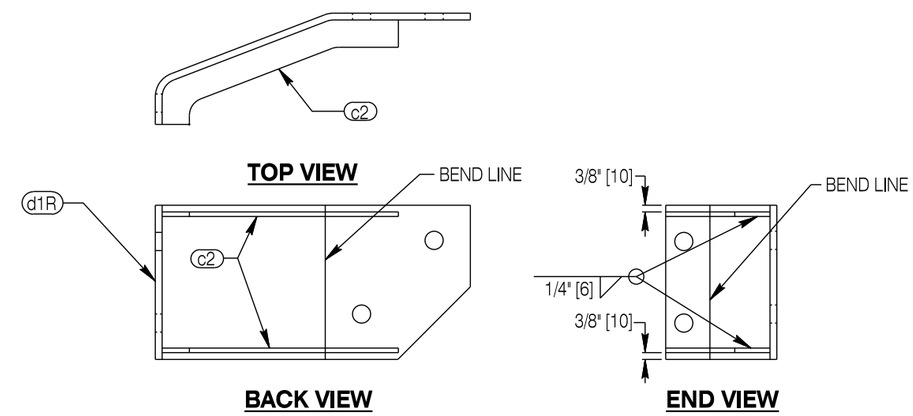

TL-3 UPPER ANGLE ASSEMBLY (RIGHT HAND TRANSITION)

Designed by: WBW	TRANSITION A UPPER ANGLE ASSEMBLY
Drawn by: JK	
Checked by: WBW	
Previous Dwg. No. NEW	

Note: Units shown in brackets [ ] are metric and are in millimeters (mm) unless other units are shown.

WYOMING DEPARTMENT OF TRANSPORTATION

MGS FABRICATION STANDARDS

STANDARD PLAN

STANDARD PLAN NUMBER **606-3**

SHEET 9 of 14

Issued by: ENGINEERING SERVICES

Date Issued: OCTOBER 2013

ITEM	QTY	DESCRIPTION	MATERIAL
c2	2	SEE LOWER ASSEMBLY SHEET	
	1	UPPER ANGLE ASSEMBLY	
d2L/d2R	1	UPPER ANGLE PLATE	3/8" [10] A36 PLATE

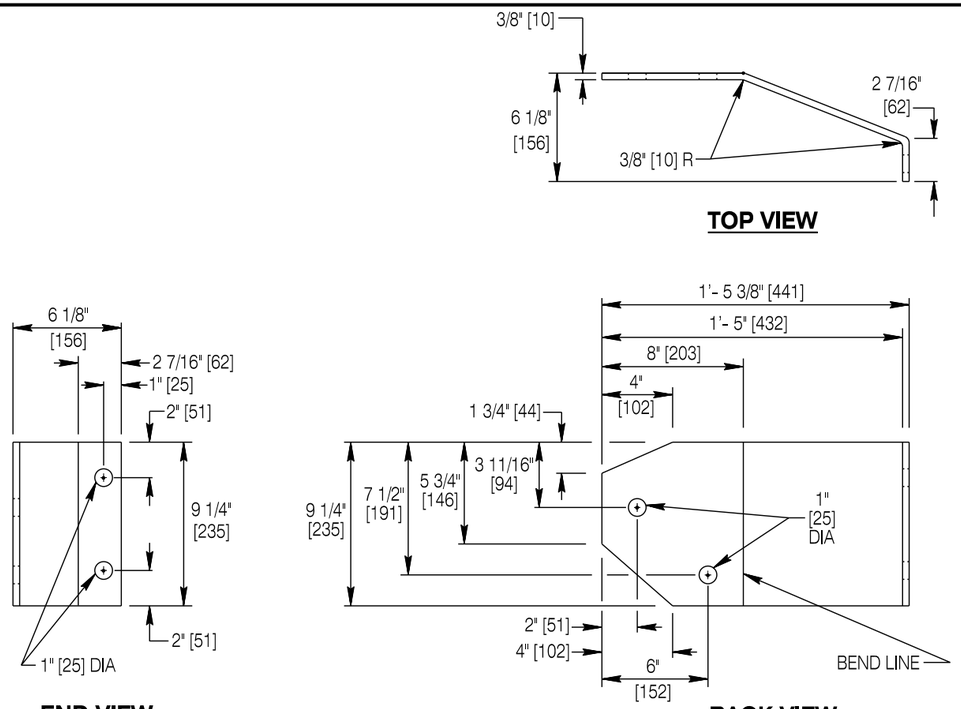

d2L - UPPER ANGLE PLATE
(LEFT HAND TRANSITION)

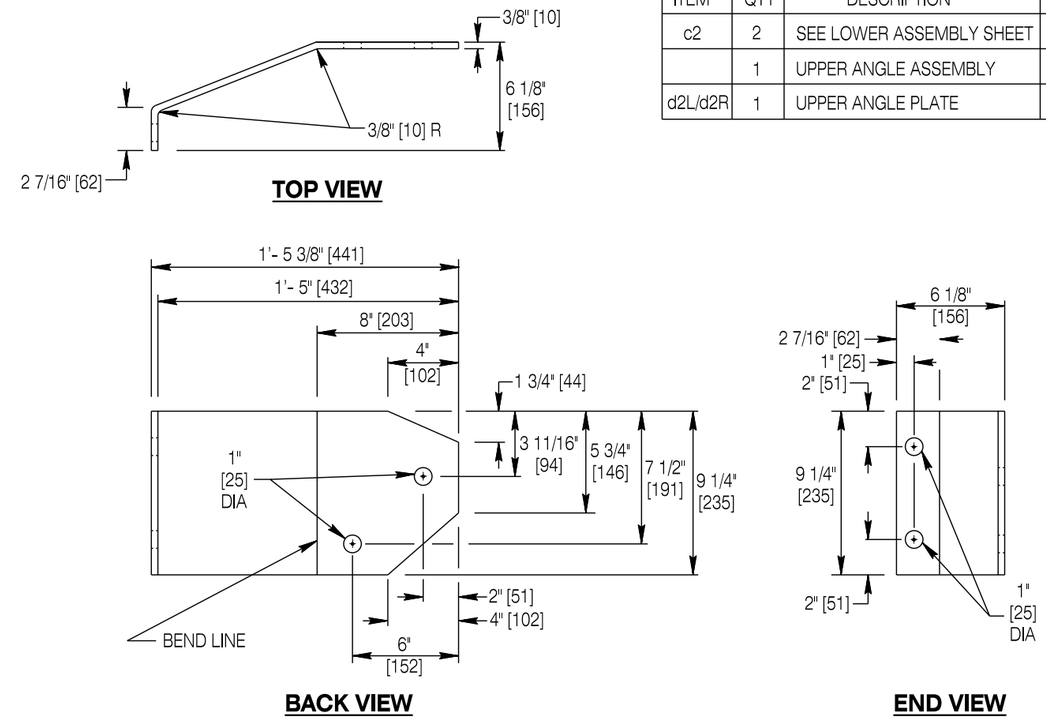

d2R - UPPER ANGLE PLATE
(RIGHT HAND TRANSITION)

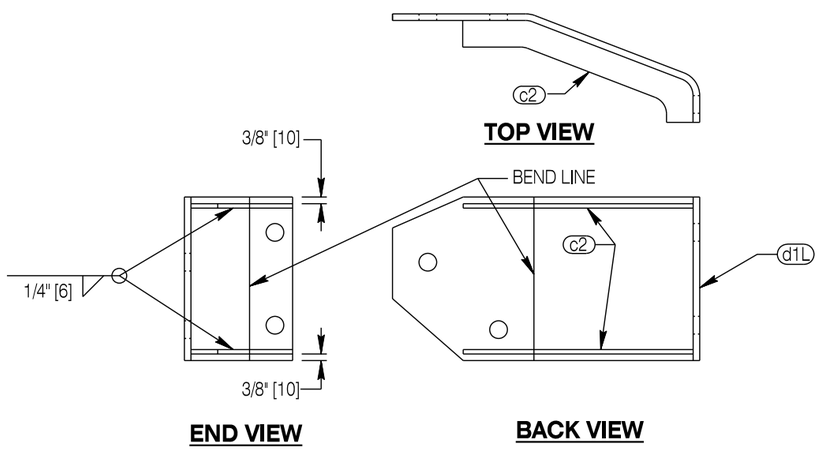

TL-4 UPPER ANGLE ASSEMBLY
(LEFT HAND TRANSITION)

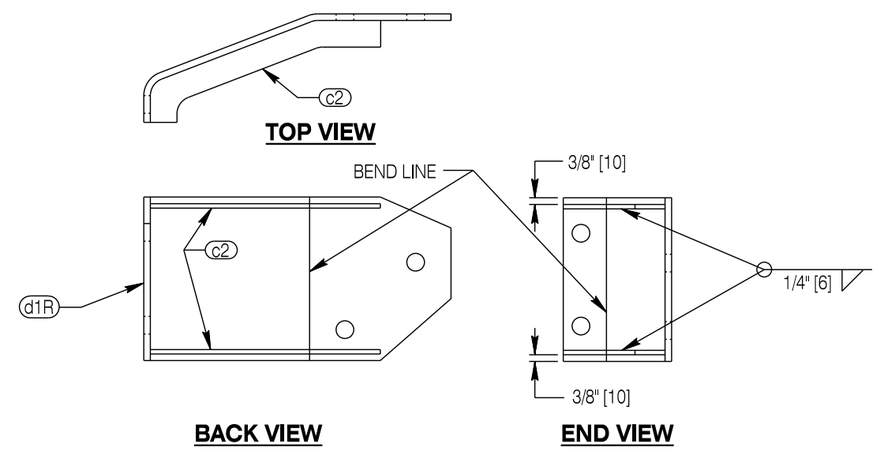

TL-4 UPPER ANGLE ASSEMBLY
(RIGHT HAND TRANSITIONL)

Designed by: WBW	TRANSITION B UPPER ANGLE ASSEMBLY
Drawn by: JK	
Checked by: WBW	
Previous Dwg. No. NEW	

Note: Units shown in brackets [ ] are metric and are in millimeters (mm) unless other units are shown.

WYOMING DEPARTMENT OF TRANSPORTATION

MGS FABRICATION STANDARDS

STANDARD PLAN

STANDARD PLAN NUMBER
606-3
SHEET 10 of 14
Issued by: ENGINEERING SERVICES
Date Issued: OCTOBER 2013

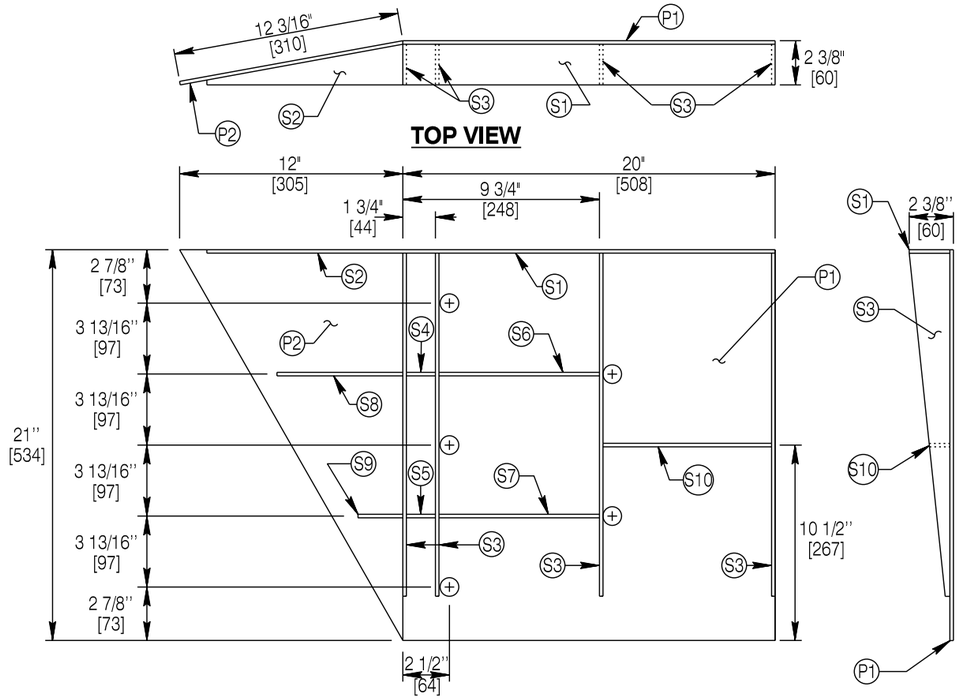

ELEVATION VIEW
(BACK SIDE)

END VIEW

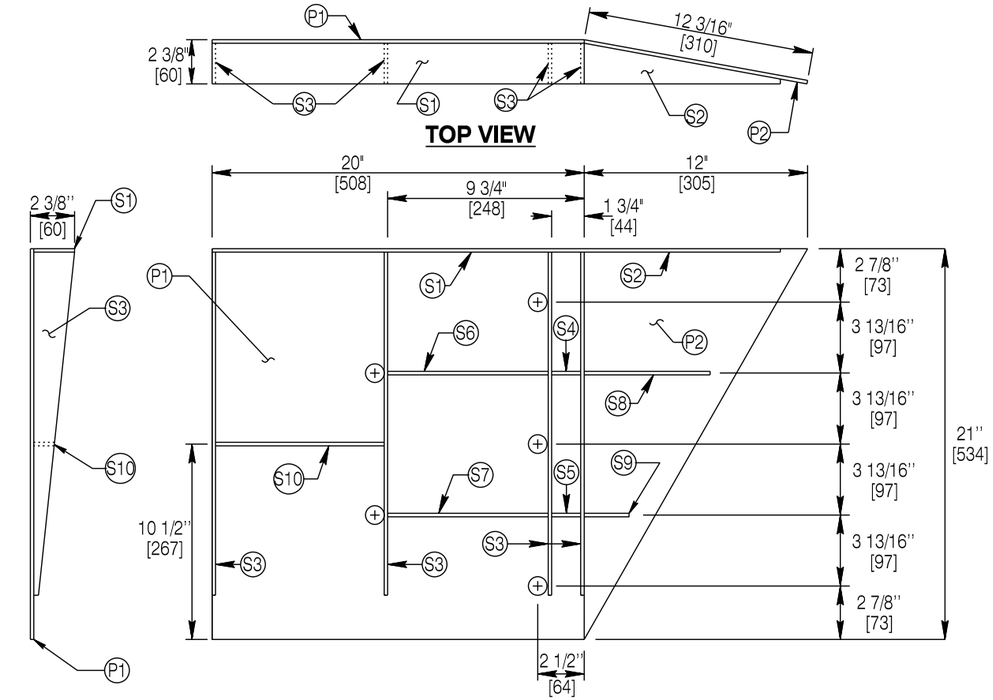

END VIEW

ELEVATION VIEW
(BACK SIDE)

LEFT HAND NEW JERSEY CONNECTION PLATE

CONCRETE BARRIER SIDE ← → THRIE BEAM SIDE

RIGHT HAND NEW JERSEY CONNECTION PLATE

THRIE BEAM SIDE ← → CONCRETE BARRIER SIDE

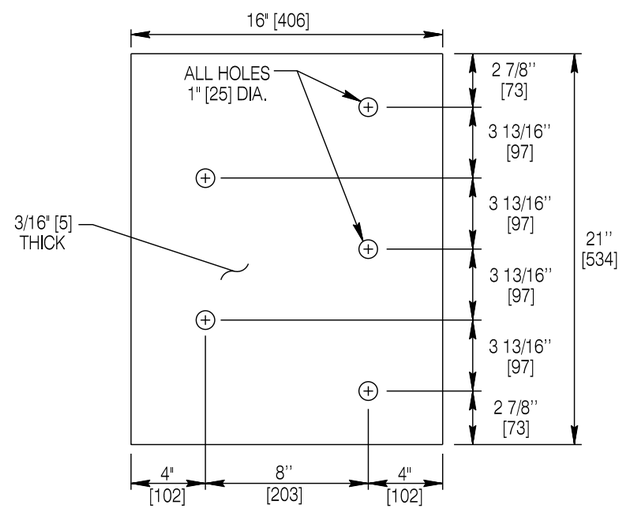

BACKING PLATE

Install on back side of concrete barrier.

WELDING INSTRUCTIONS:

(A) Weld stiffeners located on the outside edges of the cover plates as follows: 3/16" [5] continuous back weld on external sides and 3/16" [5] filet weld by 1" [25] long spaced at 2" [51] on internal sides.

(B) Weld stiffeners located on the inside of the cover plates as follows: 3/16" [5] fillet weld by 1" long spaced at 2" [51] both sides.

(C) Weld rectangular and triangular cover plates together with a full penetration groove weld.

GENERAL NOTES

1. Provide steel in accordance with ASTM A36.
2. Weld components with E60 rod.
3. Galvanize in accordance with the Standard Specifications for Road and Bridge Construction.

Designed by: WBW	TRANSITION C CONNECTOR PLATE
Drawn by: JK	
Checked by: WBW	
Previous Dwg. No. NEW	

Note: Units shown in brackets [ ] are metric and are in millimeters (mm) unless other units are shown.

WYOMING DEPARTMENT OF TRANSPORTATION

MGS FABRICATION STANDARDS

STANDARD PLAN

STANDARD PLAN NUMBER
606-3
SHEET 11 of 14
Issued by: ENGINEERING SERVICES
Date Issued: OCTOBER 2013

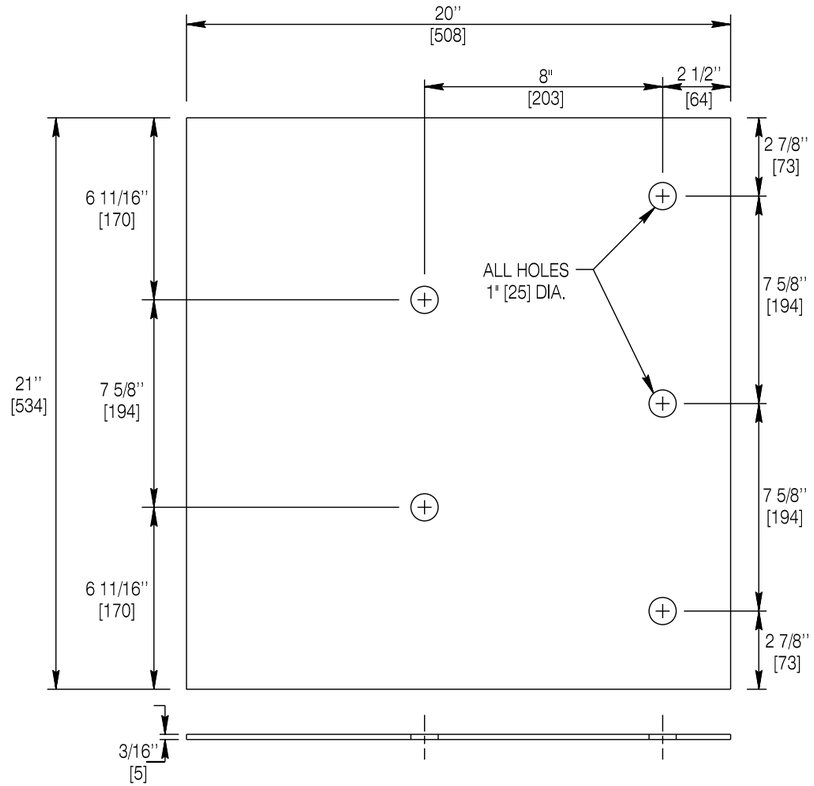

COVER PLATE #1

P1

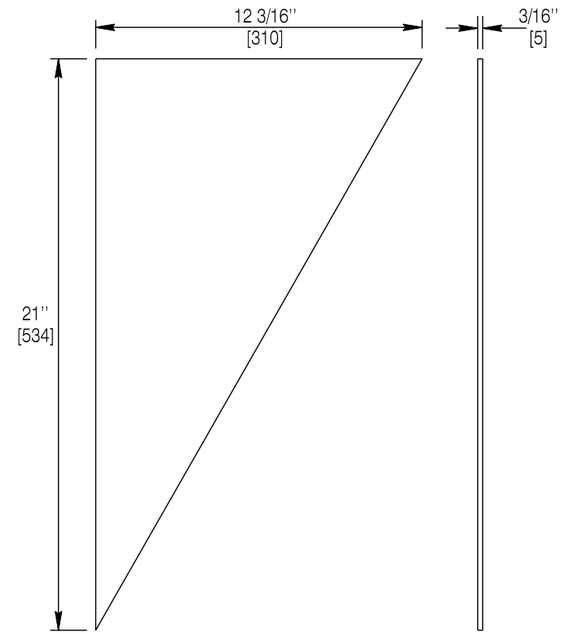

COVER PLATE #2

P2

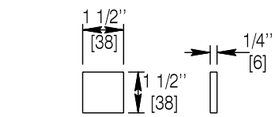

STIFFENER #4 - 1 EACH

S4

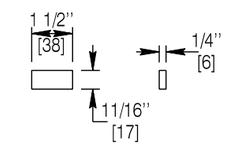

STIFFENER #5 - 1 EACH

S5

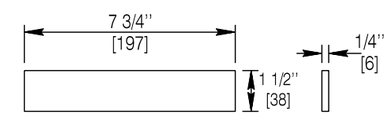

STIFFENER #6 - 1 EACH

S6

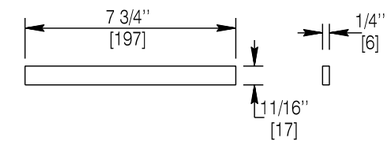

STIFFENER #7 - 1 EACH

S7

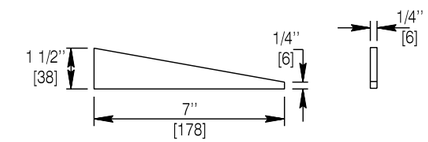

STIFFENER #8 - 1 EACH

S8

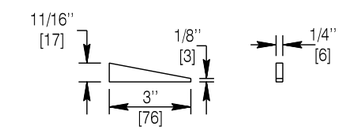

STIFFENER #9 - 1 EACH

S9

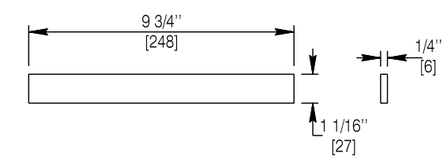

STIFFENER #10 - 1 EACH

S10

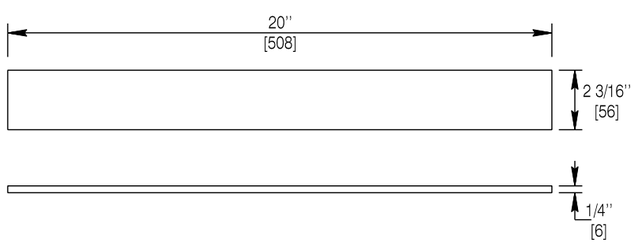

STIFFENER #1 - 1 EACH

S1

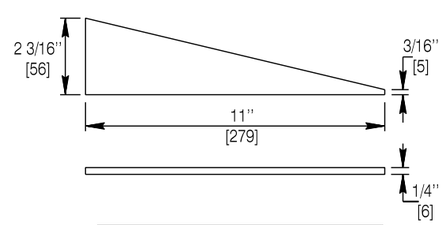

STIFFENER #2 - 1 EACH

S2

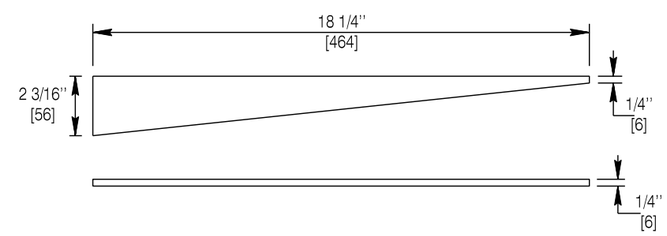

STIFFENER #3 - 4 EACH

S3

SEE NOTES ON PREVIOUS SHEET

Designed by: WBW	TRANSITION C CONNECTOR PLATE (CON'T.)
Drawn by: JK	
Checked by: WBW	
Previous Dwg. No. NEW	

Note: Units shown in brackets [ ] are metric and are in millimeters (mm) unless other units are shown.

WYOMING DEPARTMENT OF TRANSPORTATION

MGS FABRICATION STANDARDS

STANDARD PLAN

STANDARD PLAN NUMBER
606-3
SHEET 12 of 14
Issued by: ENGINEERING SERVICES
Date Issued: OCTOBER 2013

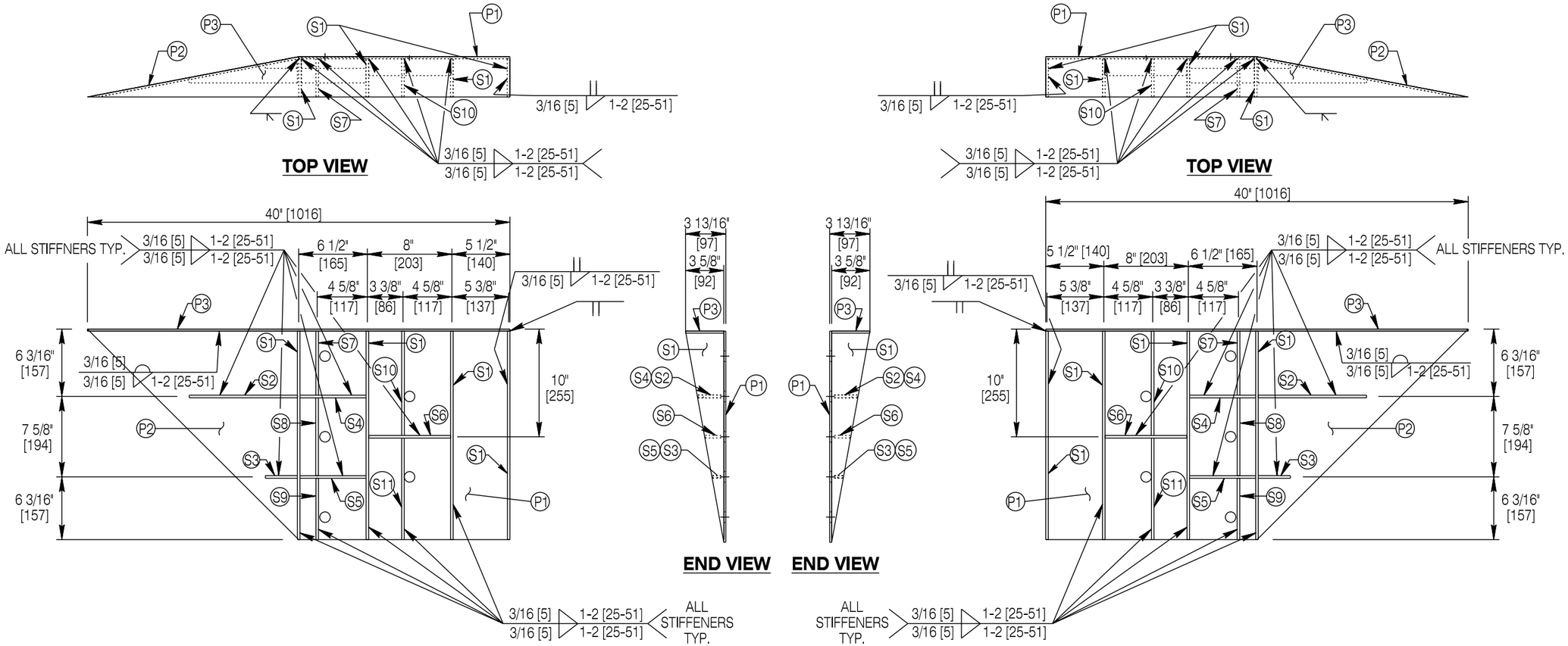

LEFT HAND SINGLE SLOPE CONNECTION PLATE

CONCRETE BARRIER SIDE ← → THRIE BEAM SIDE

RIGHT HAND SINGLE SLOPE CONNECTION PLATE

THRIE BEAM SIDE ← → CONCRETE BARRIER SIDE

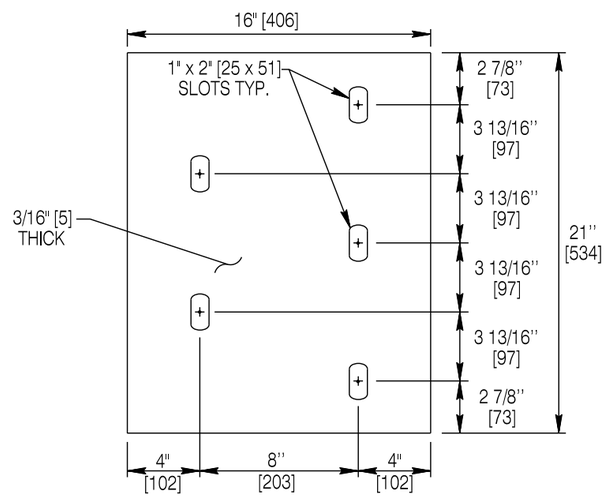

BACKING PLATE

Install on back side of concrete barrier.

WELDING INSTRUCTIONS

1. Weld plate P3 as follows: 3/16" [5] continuous back weld on exterior sides and 3/16" [5] fillet weld 1" [25] long spaced at 2" [51] on interior sides.
2. Weld stiffeners located on the inside of the cover plates as follows: 3/16" [5] fillet weld 1" [25] long spaced at 2" [51] both sides.
3. Weld together cover plates P1 and P2 with full penetration groove weld.

NOTES

1. P1, P2 and P3 will be fabricated of 3/16" [5] thick A36 grade structural steel.
2. Galvanize connector plates in accordance with AASHTO M111.
3. Fabricate stiffener plates of 1/4" [6] thick A36 Grade structural steel.

Designed by: WBW	TRANSITION D CONNECTOR PLATE
Drawn by: JK	
Checked by: WBW	
Previous Dwg. No. NEW	

Note: Units shown in brackets [ ] are metric and are in millimeters (mm) unless other units are shown.

WYOMING DEPARTMENT OF TRANSPORTATION

MGS FABRICATION STANDARDS

STANDARD PLAN

STANDARD PLAN NUMBER **606-3**

SHEET 13 of 14

Issued by: ENGINEERING SERVICES

Date Issued: OCTOBER 2013

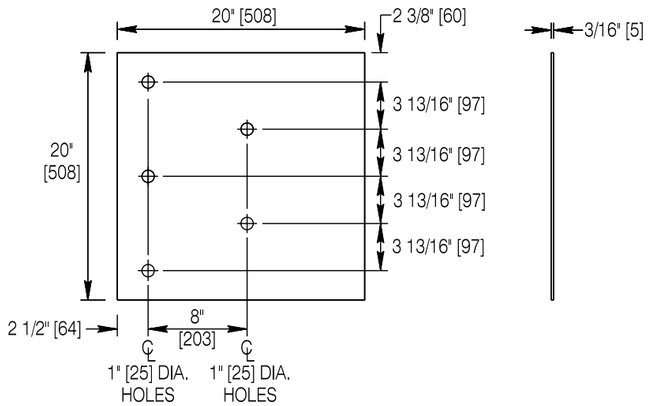

COVER PLATE #1

(P1)

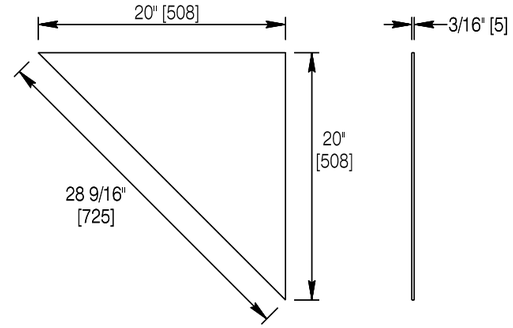

COVER PLATE #2

(P2)

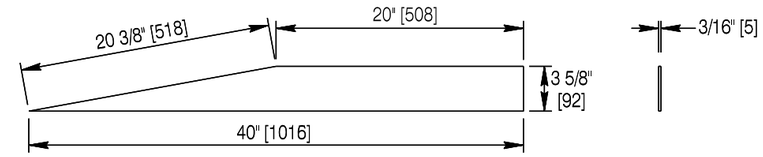

COVER PLATE #3

(P3)

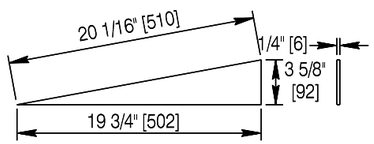

STIFFENER #1 - 4 EACH

(S1)

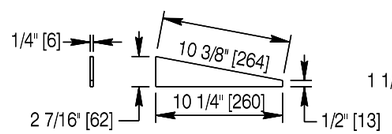

STIFFENER #2 - 1 EACH

(S2)

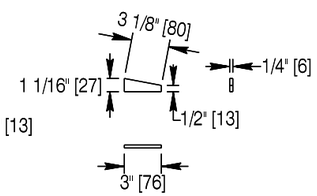

STIFFENER #3 - 1 EACH

(S3)

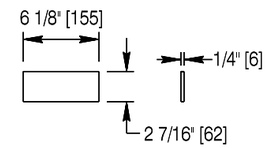

STIFFENER #4 - 1 EACH

(S4)

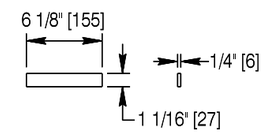

STIFFENER #5 - 1 EACH

(S5)

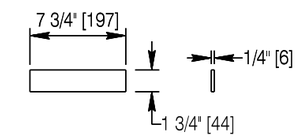

STIFFENER #6 - 1 EACH

(S6)

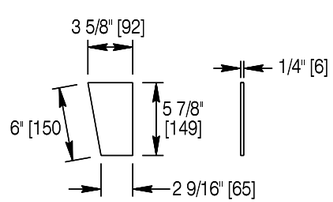

STIFFENER #7 - 1 EACH

(S7)

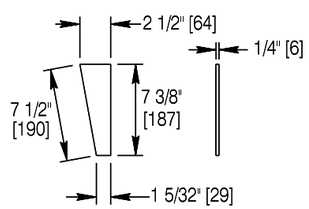

STIFFENER #8 - 1 EACH

(S8)

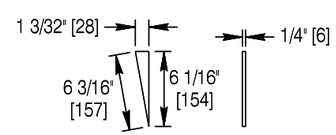

STIFFENER #9 - 1 EACH

(S9)

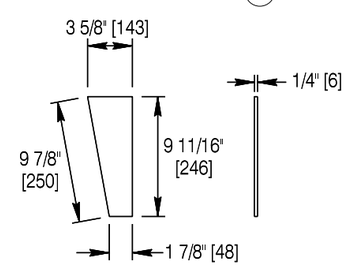

STIFFENER #10 - 1 EACH

(S10)

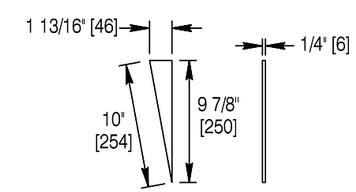

STIFFENER #11 - 1 EACH

(S11)

NOTE

P - Cover Plate

S - Stiffener Plate

Designed by: WBW	TRANSITION D CONNECTOR PLATE (CON'T.)
Drawn by: JK	
Checked by: WBW	
Previous Dwg. No. NEW	

Note: Units shown in brackets [ ] are metric and are in millimeters (mm) unless other units are shown.

WYOMING DEPARTMENT OF TRANSPORTATION

MGS FABRICATION STANDARDS

STANDARD PLAN

STANDARD PLAN NUMBER

606-3

SHEET 14 of 14

Issued by: ENGINEERING SERVICES

Date Issued: OCTOBER 2013

BOX BEAM STANDARD PLAN
INDEX OF SHEETS

SHEET	TOPIC
	LAYOUT DETAILS
01	General Requirements
02	Guardrail Placement Around Fixed Object Hazards
03	Grading Requirements
04	Grading Requirements - (Continued.)
	INSTALLATION DETAILS
05	Box Beam and BB Median Barrier
06	Transitions To Steel Bridge Rails
07	End Anchorage Type I and II and Misc. Details
08	WY-BET
09	WY-BET (Continued)

Fabricate and furnish all box beam components in accordance with the latest WYDOT Standard Plan ''Box Beam Guardrail Fabrication Standards''. By reference that Standard plan is hereby included in the contract.

Initiating Guardrail Flares and Curved Guardrail Installations with radii of 715 ft. [218 m] and greater (i.e. 8 degrees and flatter) - Initiate by angling joints, not shop bending rail. A box beam joint will typically allow nearly 2 degrees of deflection per joint. To simulate a straight 15L:1W flare (typical for high speed roadways), angle the joints at each end of the first rail element on the flare as shown below.

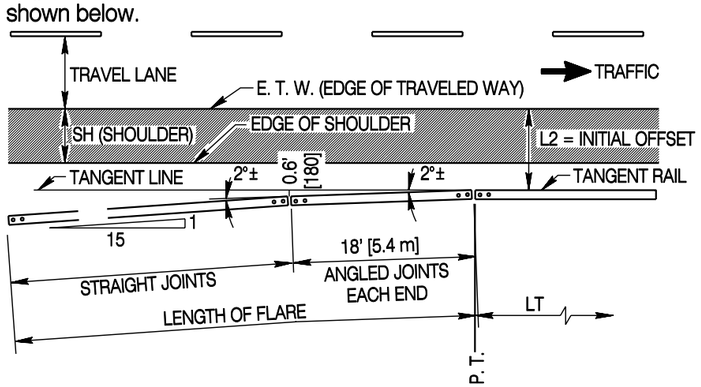

TYPICAL 15L:1W FLARE LAYOUT

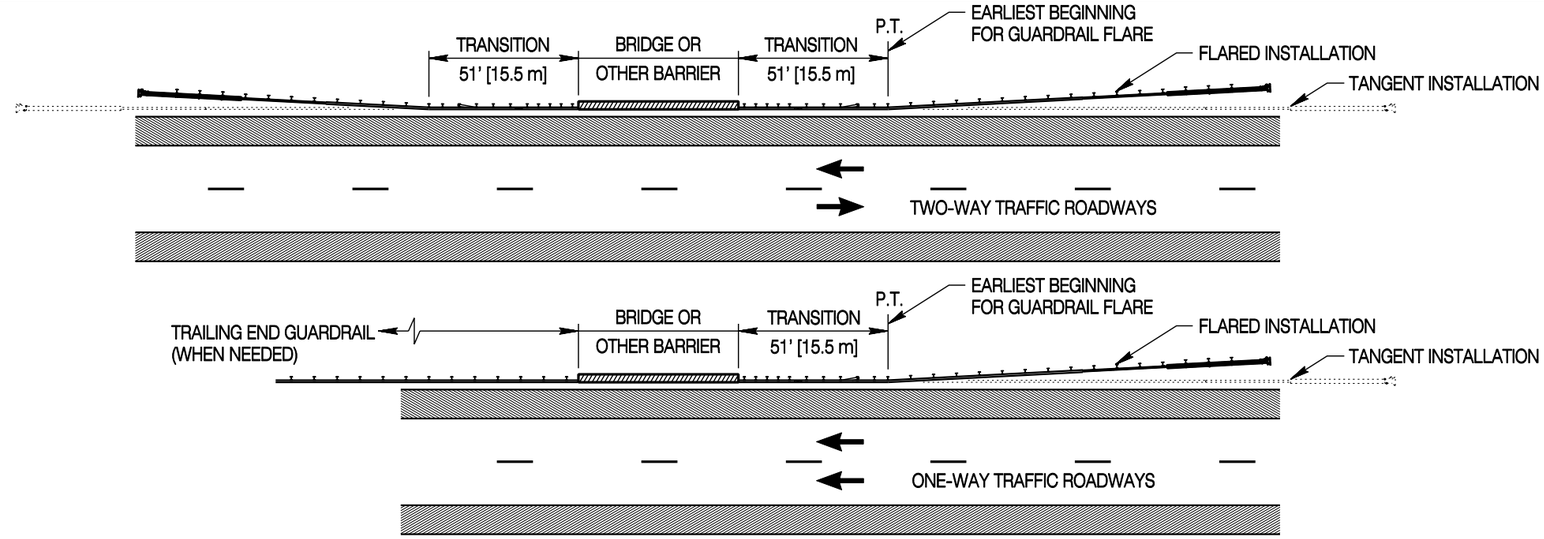

CONNECTIONS TO BRIDGE RAILING AND OTHER TRAFFIC BARRIERS

Connect guardrail to another type of traffic barrier with a transition section (see installation details for transitions). Use transitions on both the upstream and downstream ends of two-way traffic bridges and the upstream ends only for one-way traffic bridges typically found on divided highways. Ensure the transition section is tangent with the roadway where possible.

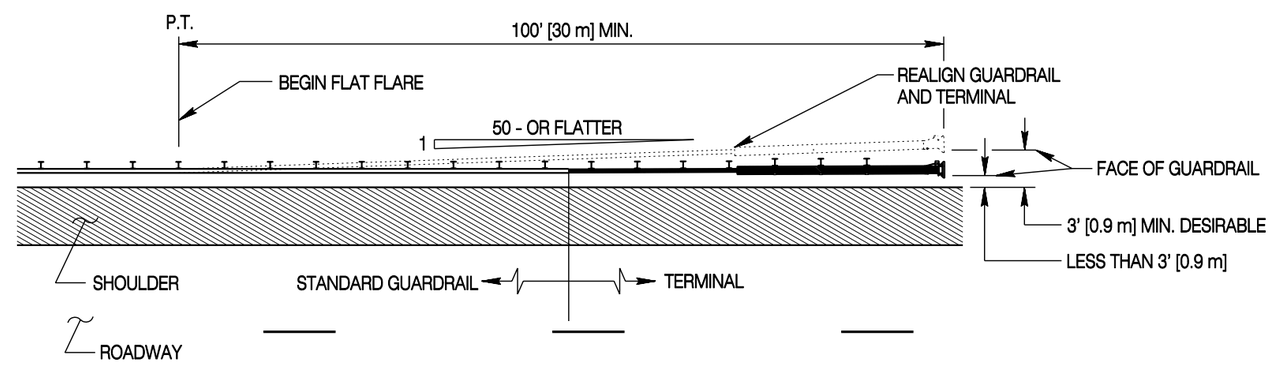

TANGENT (PARALLEL) GUARDRAIL INSTALLATIONS WHERE FACE OF GUARDRAIL IS LESS THAN 3 FEET [0.9 m] FROM THE EDGE OF SHOULDER

For tangent (parallel) guardrail installations meeting the following criteria, install with a flat flare rate to ''push'' the terminal 3 ft. [0.9 m] away from the edge of shoulder.

1. Rail face at the impact head on the guardrail terminal is located within less than 3 ft. [0.9 m] from the shoulder break point.

2. Sufficient flat grading is provided behind the guardrail to meet the grading requirements.

Designed by: WBW	LAYOUT DETAILS - GENERAL REQUIREMENTS
Drawn by: GLD	
Checked by: WBW	
Previous Dwg. No. 606-02C	

Note: Units shown in brackets [ ] are metric and are in millimeters (mm) unless other units are shown.

WYOMING DEPARTMENT OF TRANSPORTATION

BOX BEAM GUARDRAIL

STANDARD PLAN

STANDARD PLAN NUMBER
606-6
SHEET 1 of 9

Issued by: ENGINEERING SERVICES
Date Issued: NOVEMBER, 2004
FILE: J:\Dual_Std\6066_01.dgn

NOTES FOR PLACEMENT OF GUARDRAIL NEAR FIXED OBJECTS

① **Shielding Fixed Object Hazards -** Extend tangent run of guardrail a minimum of four standard post spaces (24 ft. [7.3 m]) on each side of the fixed object hazard. For standard post spacing, locate the back of the rail a minimum of 5 ft. [1.5 m] from the fixed object.

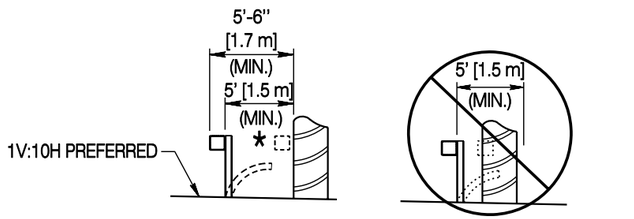

PROPER GUARDRAIL PLACEMENT

INCORRECT GUARDRAIL PLACEMENT

SECTION A - A

* The minimum provided deflection distance may be reduced by reducing the post spacing. Start the reduced post spacing 24 ft. [7.3 m] before the hazard and extend 24 ft. [7.3 m] beyond the hazard.

* Deflection Distance	Post Spacing
5 ft. [1.5 m]	6 ft. [1830] (Standard)
4 ft. [1.2 m]	4 ft. [1220]

② **Flared vs. Tangent (Parallel) Installation -** Drawing depicts flared guardrail runs with solid lines and tangent (parallel) installations in dashed lines.

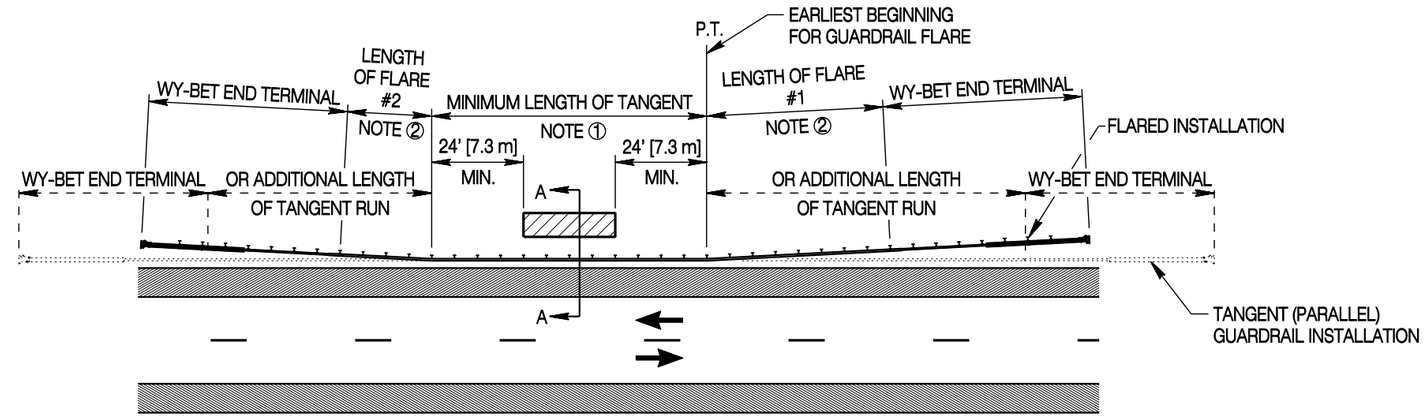

TYPICAL GUARDRAIL PLACEMENT AROUND A FIXED OBJECT

TWO WAY TRAFFIC ROADWAYS

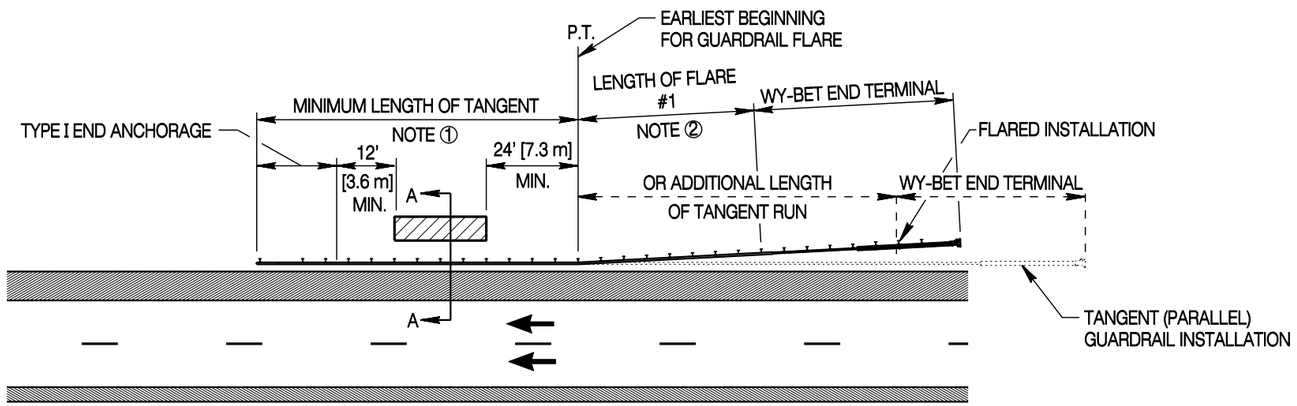

TYPICAL GUARDRAIL PLACEMENT AROUND A FIXED OBJECT

ONE WAY TRAFFIC ROADWAYS SUCH AS DIVIDED HIGHWAYS

Designed by: WBW	LAYOUT DETAILS - GUARDRAIL PLACEMENT AROUND FIXED OBJECT HAZARDS
Drawn by: GLD	
Checked by: WBW	
Previous Dwg. No. 606-02C	

Note: Units shown in brackets [ ] are metric and are in millimeters (mm) unless other units are shown.

WYOMING DEPARTMENT OF TRANSPORTATION

BOX BEAM GUARDRAIL

STANDARD PLAN

STANDARD PLAN NUMBER **606-6**

SHEET 2 of 9

Issued by: ENGINEERING SERVICES

Date Issued: NOVEMBER, 2004

FILE: j:\Dual_Std\6066_02.dgn

GRADING NOTES

If necessary, modify the earthwork shown in the plans and as staked to provide these minimum grading requirements at guardrail installations. The engineer will pay for this work using standard grading bid items as provided in the plans.

① Ensure the cross-slope of the earthwork in the area approaching a guardrail installation, the area around the terminal and the area of the guardrail flare is a 1V:10H surface or flatter. If Type I End Anchorages are used, extend this grading envelope through the clear-zone to the upstream beginning of the terminal.

② Ensure cross slope of grading from roadway to the barrier face is 1V:10H or flatter. Extend 1V:10H a minimum of 2 ft. [600] behind guardrail posts. The department may specify 1V:8H for the guardrail installation where drainage and/or snow accumulation must be mitigated.

③ Ensure the area immediately behind and beyond the terminal is traversable and free from fixed object hazards or is at least similar in character to upstream, unshielded slopes located within the clear-zone. Ensure a slope of 1V:4H or flatter; if not practical, use a maximum slope of 1V:3H. Extend the traversable slope for a distance X beyond post 3 of the end terminal.

If not shown on the plans, calculate X from the formula below: $X = (CZ-Y)(L_R)/(CZ)$

DESIGN SPEED (mph)	L_R Runout Length (ft)			
	ADT OVER 6000	ADT 2000 to 6000	ADT 800 to 2000	ADT Under 800
80	480	440	400	360
70	480	440	400	360
60	400	360	330	300
50	320	290	260	240
40	240	220	200	180
30	170	160	140	130

METRIC TABLE

DESIGN SPEED (km/h)	L_R Runout Length (meters)			
	ADT OVER 6000	ADT 2000 to 6000	ADT 800 to 2000	ADT Under 800
120	145	135	120	110
110	145	135	120	110
100	130	120	105	100
90	110	105	95	85
80	100	90	80	75
70	80	75	65	60
60	70	60	55	50
50	50	50	45	40

④ For tangent guardrail installations where the face of the Guardrail at the impact head of the terminal is less than 3 ft. [915] from the shoulder break point, realign the guardrail and terminal as shown in detail on **Sheet 1** of this standard plan.

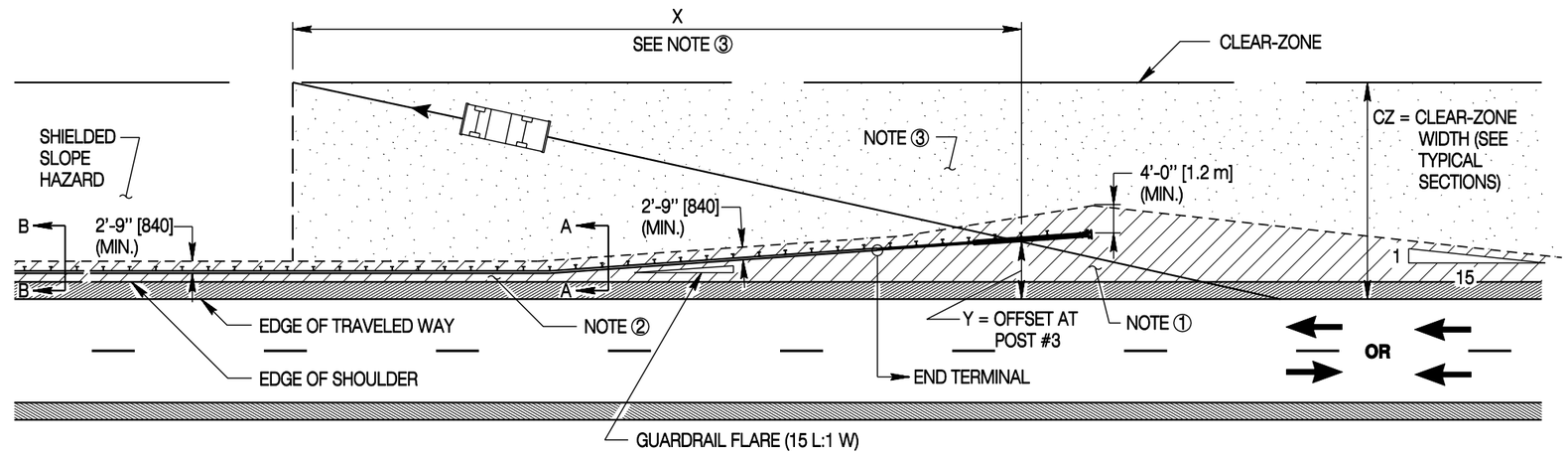

APPROACH END GRADING - FLARED GUARDRAIL INSTALLATION

(APPLIES TO TWO WAY TRAFFIC AND ONE WAY TRAFFIC ROADWAYS SUCH AS DIVIDED HIGHWAYS)

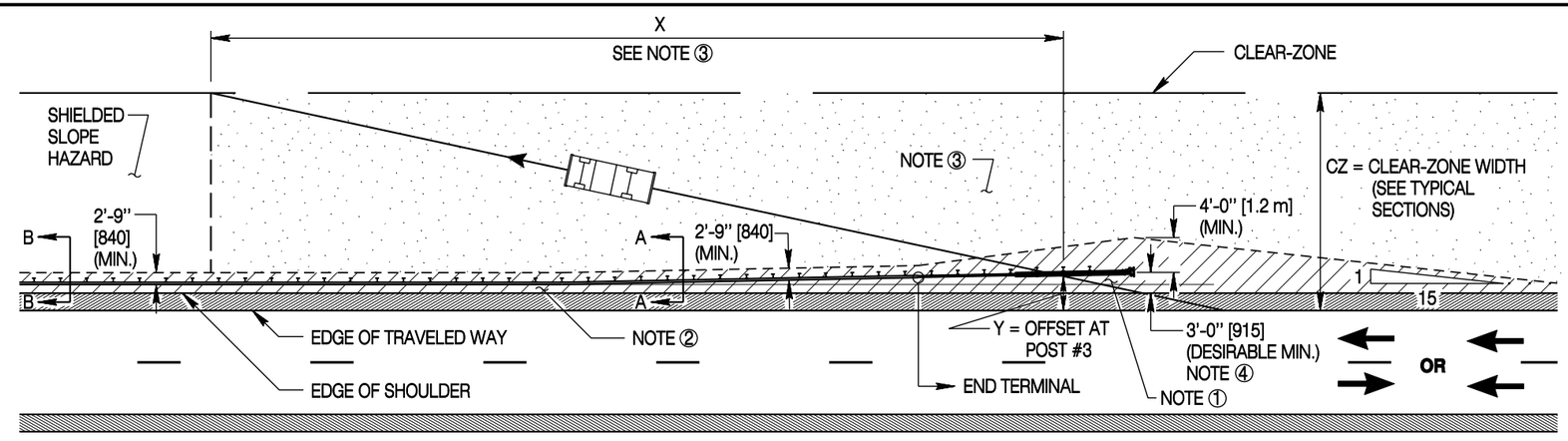

APPROACH END GRADING - TANGENT (PARALLEL) GUARDRAIL INSTALLATION

(APPLIES TO TWO WAY TRAFFIC AND ONE WAY TRAFFIC ROADWAYS SUCH AS DIVIDED HIGHWAYS)

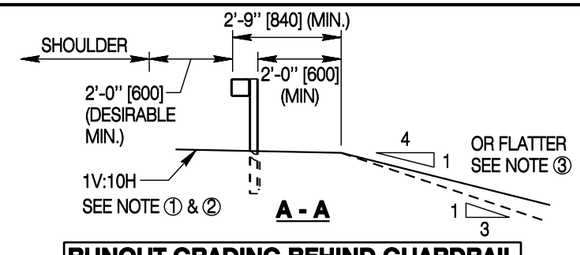

RUNOUT GRADING BEHIND GUARDRAIL

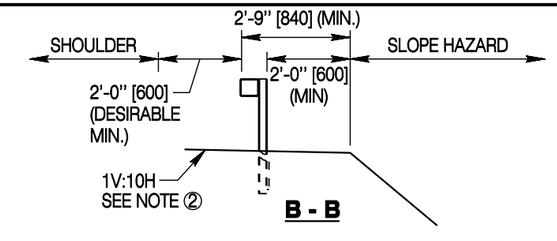

FILL SLOPE HAZARD PROTECTION

Designed by: WBW	
Drawn by: GLD	
Checked by: WBW	
Previous Dwg. No. 606-02C	

LAYOUT DETAILS - GRADING REQUIREMENTS

Note: Units shown in brackets [ ] are metric and are in millimeters (mm) unless other units are shown.

WYOMING DEPARTMENT OF TRANSPORTATION

BOX BEAM GUARDRAIL

STANDARD PLAN

STANDARD PLAN NUMBER **606-6**

SHEET 3 of 9

Issued by: ENGINEERING SERVICES

Date Issued: NOVEMBER, 2004

FILE: j:\Stan\Dual_Std_Wrk\6066_03.dgn

GRADING NOTES

If necessary, modify the earthwork shown in the plans and as staked to provide these minimum grading requirements at guardrail installations. The engineer will pay for this work using standard grading bid items as provided in the plans.

① Ensure the cross-slope of the earthwork in the area approaching a guardrail installation, the area around the terminal and the area of the guardrail flare is a 1V:10H surface or flatter. If Type I End Anchorages are used, extend this grading envelope through the clear-zone to the upstream beginning of the terminal.

② Ensure cross slope of grading from roadway to the barrier face is 1V:10H or flatter. Extend 1V:10H a minimum of 2 ft. [600] behind guardrail posts. The department may specify 1V:8H for the guardrail installation where drainage and/or snow accumulation must be mitigated.

③ Ensure the area immediately behind and beyond the terminal is traversable and free from fixed object hazards or is at least similar in character to upstream, unshielded slopes located within the clear-zone. Ensure a slope of 1V:4H or flatter; if not practical, use a maximum slope of 1V:3H. Extend the traversable slope for a distance X beyond post 3 of the end terminal.

If not shown on the plans, calculate X from the formula below: $X = (CZ-Y)(L_R) / (CZ)$

DESIGN SPEED (mph)	L_R Runout Length (ft)			
	ADT OVER 6000	ADT 2000 to 6000	ADT 800 to 2000	ADT Under 800
80	480	440	400	360
70	480	440	400	360
60	400	360	330	300
50	320	290	260	240
40	240	220	200	180
30	170	160	140	130

METRIC TABLE

DESIGN SPEED (km/h)	L_R Runout Length (meters)			
	ADT OVER 6000	ADT 2000 to 6000	ADT 800 to 2000	ADT Under 800
120	145	135	120	110
110	145	135	120	110
100	130	120	105	100
90	110	105	95	85
80	100	90	80	75
70	80	75	65	60
60	70	60	55	50
50	50	50	45	40

④ For tangent guardrail installations where the face of the Guardrail at the impact head of the terminal is less than 3 ft. [915] from the shoulder break point, realign the guardrail and terminal as shown in detail on **Sheet 1** of this standard plan.

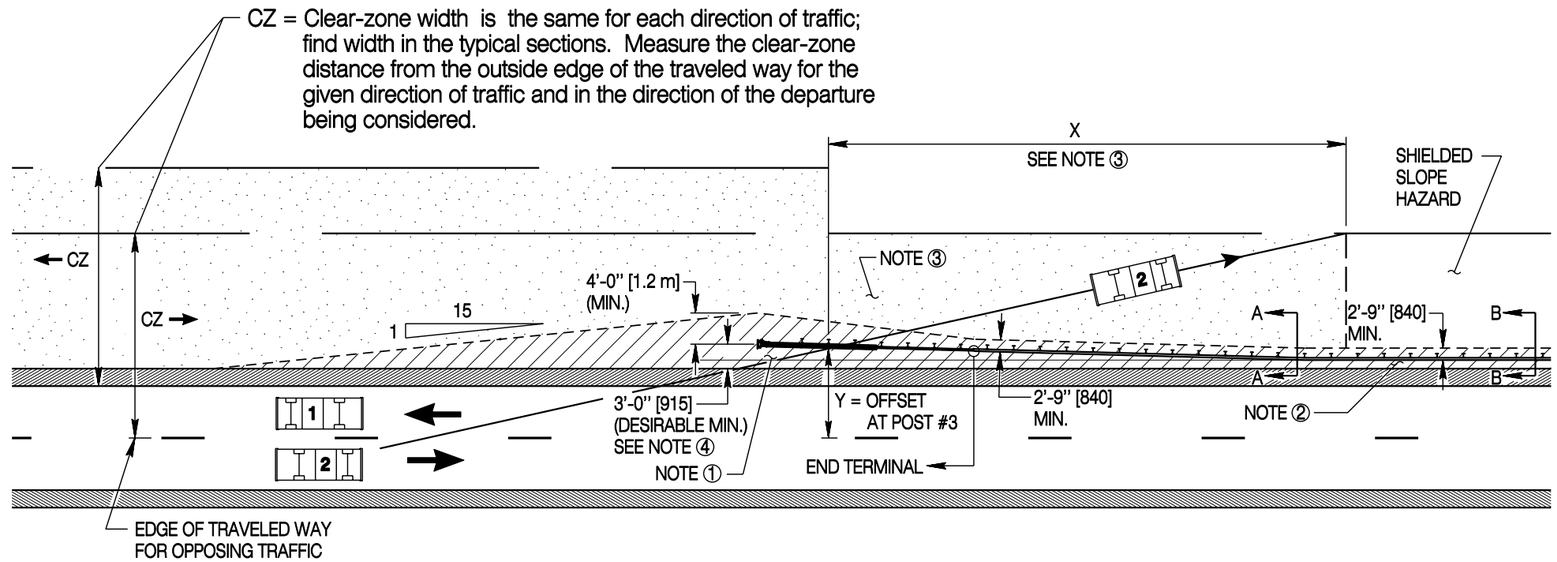

APPROACH END GRADING FOR OPPOSING TRAFFIC LANES

(APPLIES TO TWO WAY TRAFFIC ROADWAYS)

Note: Tangent installation shown, apply same concept for flared installations

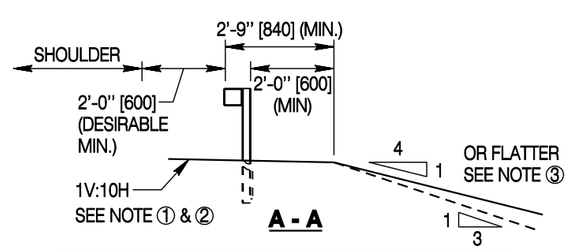

RUNOUT GRADING BEHIND GUARDRAIL

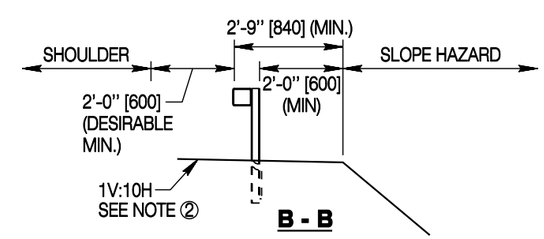

FILL SLOPE HAZARD PROTECTION

Designed by:	WBW
Drawn by:	GLD
Checked by:	WBW
Previous Dwg. No.	606-02C

LAYOUT DETAILS - GRADING REQUIREMENTS (CONTINUED)

Note: Units shown in brackets [ ] are metric and are in millimeters (mm) unless other units are shown.

WYOMING DEPARTMENT OF TRANSPORTATION

BOX BEAM GUARDRAIL

STANDARD PLAN

STANDARD PLAN NUMBER **606-6**

SHEET 4 of 9

Issued by: ENGINEERING SERVICES

Date Issued: NOVEMBER, 2004

FILE: j:\Dual_Std\6066_04.dgn

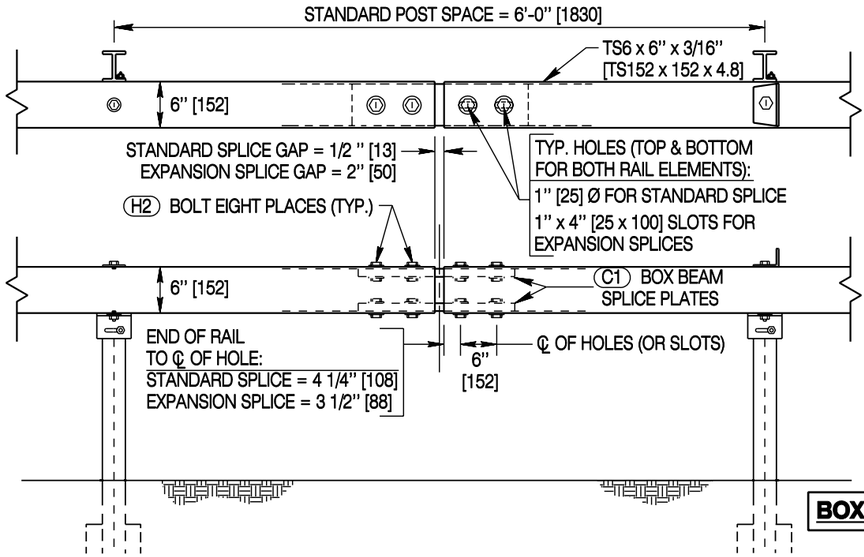

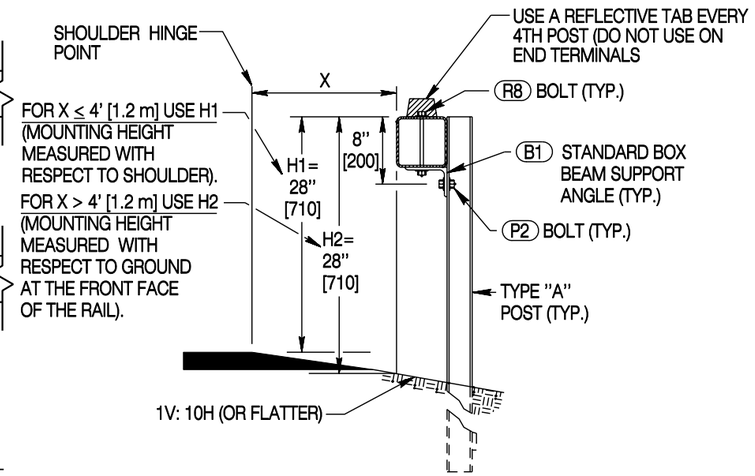

BOX BEAM GUARDRAIL DETAILS

BOLT REQUIREMENTS	
	HIGH STRENGTH HEAVY HEX RAIL SPLICE BOLTS
H2	3/4" x 2" [19 x 50] (A325) + 1 HARDENED WASHER (F436)
	POST BOLTS - HEX HEAD (MILD STEEL)
M2	3/4" x 1 1/2" [19 x 40] (A307) + 2 WASHERS (F844) + 1 NUT (A563)
P2	1/2" x 1 1/2" [13 x 40] (A307) + 2 WASHERS (F844) + 1 NUT (A563)
	RAIL BOLTS - HEX HEAD (MILD STEEL)
R8	3/8" x 7 1/2" [10 x 190] (A307) + 2 WASHERS (F844) + 1 NUT (A563)

MODIFYING EXISTING PADDLE MOUNTED MEDIAN BARRIER TO STANDARD MEDIAN BARRIER CONNECTION.

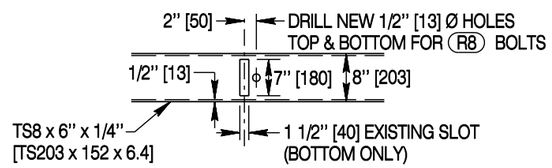

BOTTOM VIEW

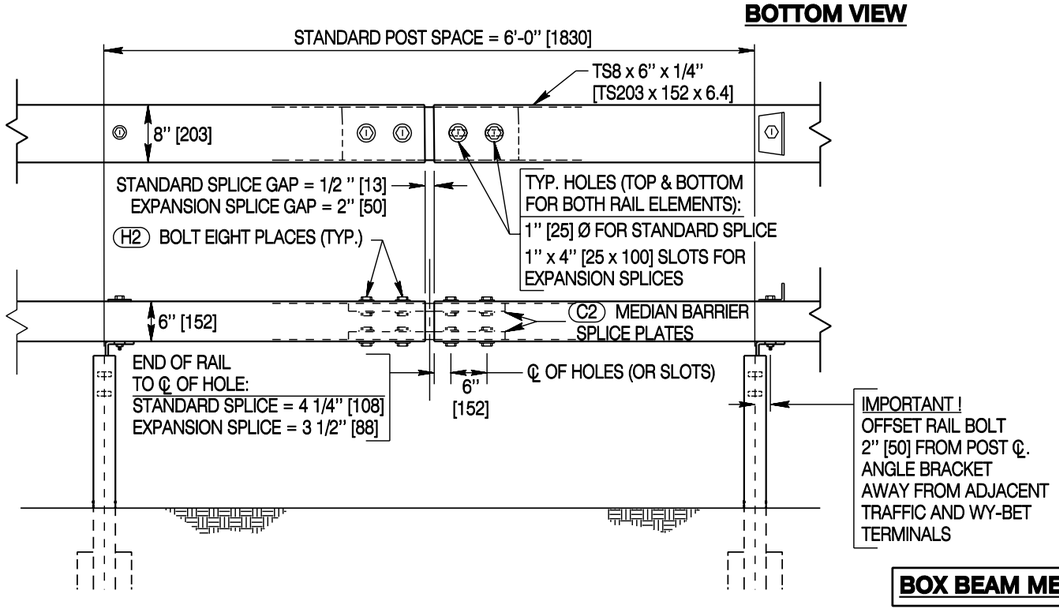

BOX BEAM MEDIAN BARRIER DETAILS

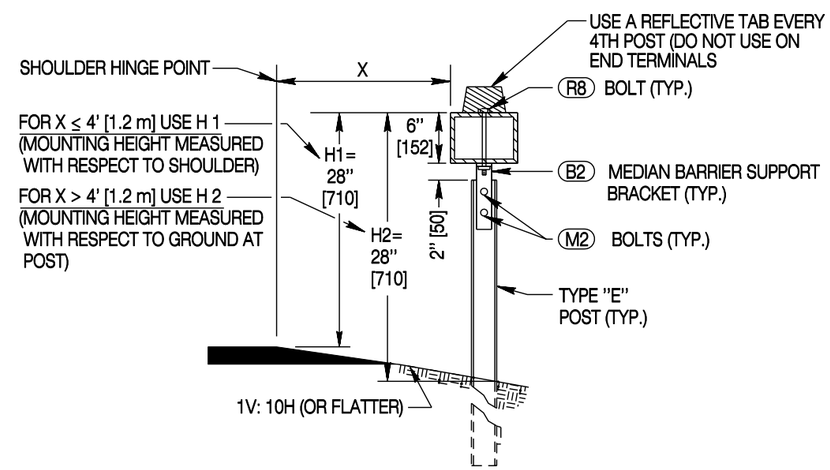

STANDARD MEDIAN BARRIER POST (TYPICAL)
(POSITIVE CONNECTION)

Designed by: WBW	INSTALLATION DETAILS - BOX BEAM AND BB MEDIAN BARRIER
Drawn by: GLD	
Checked by: WBW	
Previous Dwg. No. 606-02C	

Note: Units shown in brackets [ ] are metric and are in millimeters (mm) unless other units are shown.

WYOMING DEPARTMENT OF TRANSPORTATION

BOX BEAM GUARDRAIL

STANDARD PLAN

STANDARD PLAN NUMBER
606-6
SHEET 5 of 9
Issued by: ENGINEERING SERVICES
Date Issued: NOVEMBER, 2004
FILE: j:\Stan\Dual_Std_Wrk\6066_05.dgn

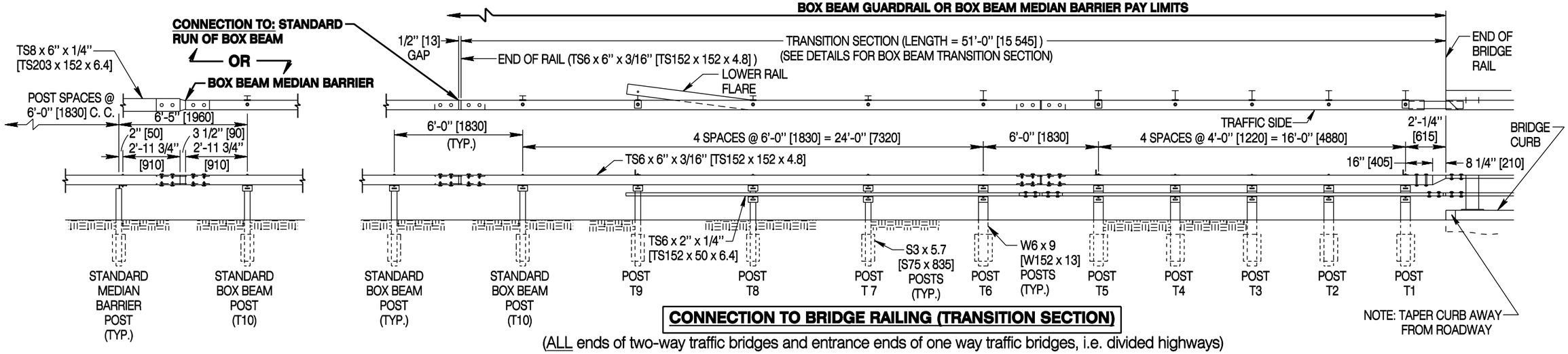

CONNECTION TO BRIDGE RAILING (TRANSITION SECTION)

(ALL ends of two-way traffic bridges and entrance ends of one way traffic bridges, i.e. divided highways)
Left Hand approach installation shown - mirror details for Right Hand approach installation

BOLT REQUIREMENTS	
	HIGH STRENGTH HEAVY HEX RAIL SPLICE BOLTS
(H4)	3/4" x 4" [19 x 100] (A325) + 2 HARDENED WASHERS (F436) + 1 NUT (A194-2HM)
(H8)	3/4" x 8" [19 x 200] (A325) + 2 HARDENED WASHERS (F436) + 1 NUT (A194-2HM)
	POST BOLTS - HEX HEAD (MILD STEEL)
(P2)	1/2" x 1 1/2" [13 x 40] (A307) + 2 WASHERS (F844) + 1 NUT (A563)
	RAIL BOLTS - HEX HEAD (MILD STEEL)
(R4)	3/8" x 3 1/2" [10 x 90] (A307) + 2 WASHERS (F844) + 1 NUT (A563)
(R8)	3/8" x 7 1/2" [10 x 190] (A307) + 2 WASHERS (F844) + 1 NUT (A563)

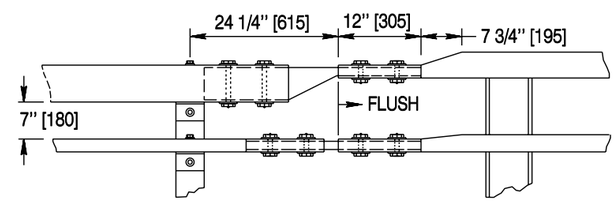

TL-4 BRIDGE RAIL CONNECTION
Use same hardware as TL-3 Connection

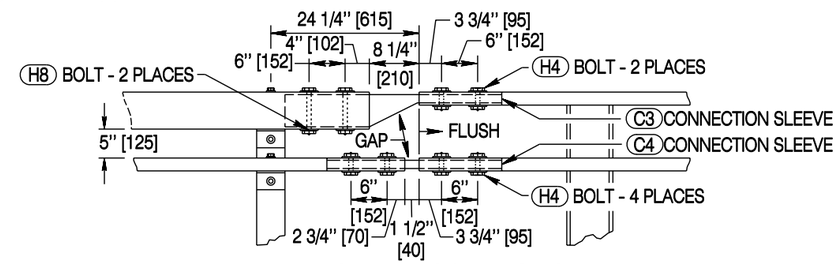

TL-3 BRIDGE RAIL CONNECTION

BRIDGE CONNECTION DETAILS

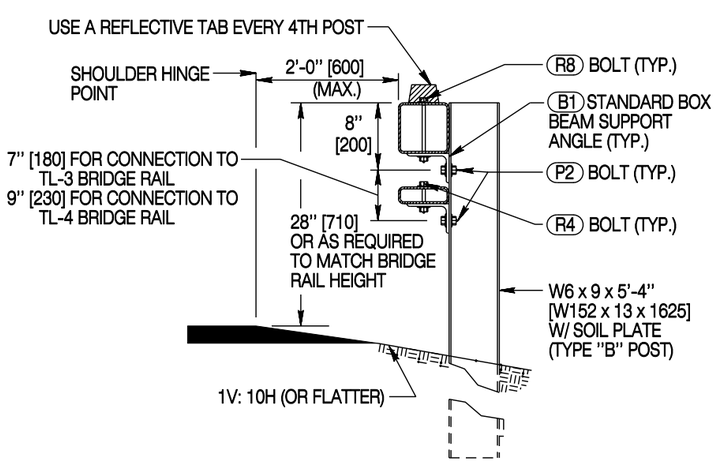

POST (T1) THRU (T6)

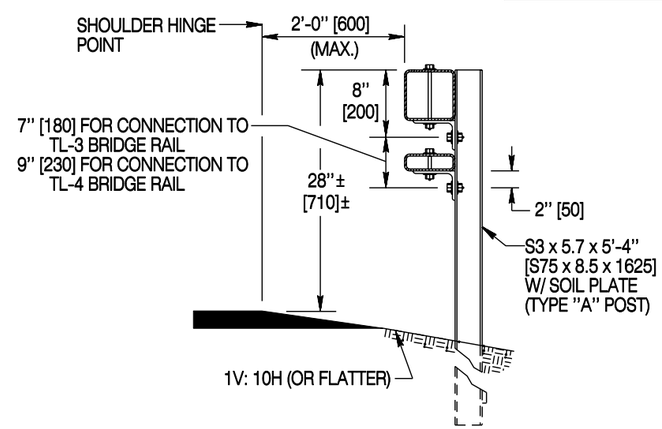

POST (T7) & (T8)

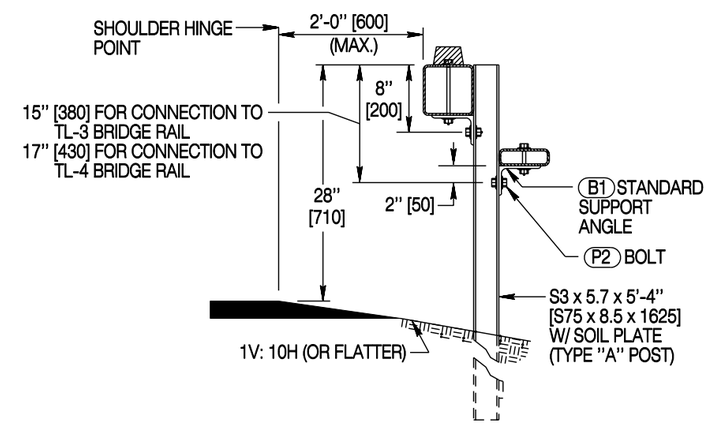

POST (T9)

Designed by: WBW	INSTALLATION DETAILS - TRANSITIONS TO STEEL BRIDGE RAILS
Drawn by: GLD	
Checked by: WBW	
Previous Dwg. No. 606-02C	

Note: Units shown in brackets [ ] are metric and are in millimeters (mm) unless other units are shown.

WYOMING DEPARTMENT OF TRANSPORTATION

BOX BEAM GUARDRAIL

STANDARD PLAN

STANDARD PLAN NUMBER
606-6
SHEET 6 of 9
Issued by: ENGINEERING SERVICES
Date Issued: NOVEMBER, 2004
FILE: j:\Stan\Dual_Std_Wrk\6066_06.dgn

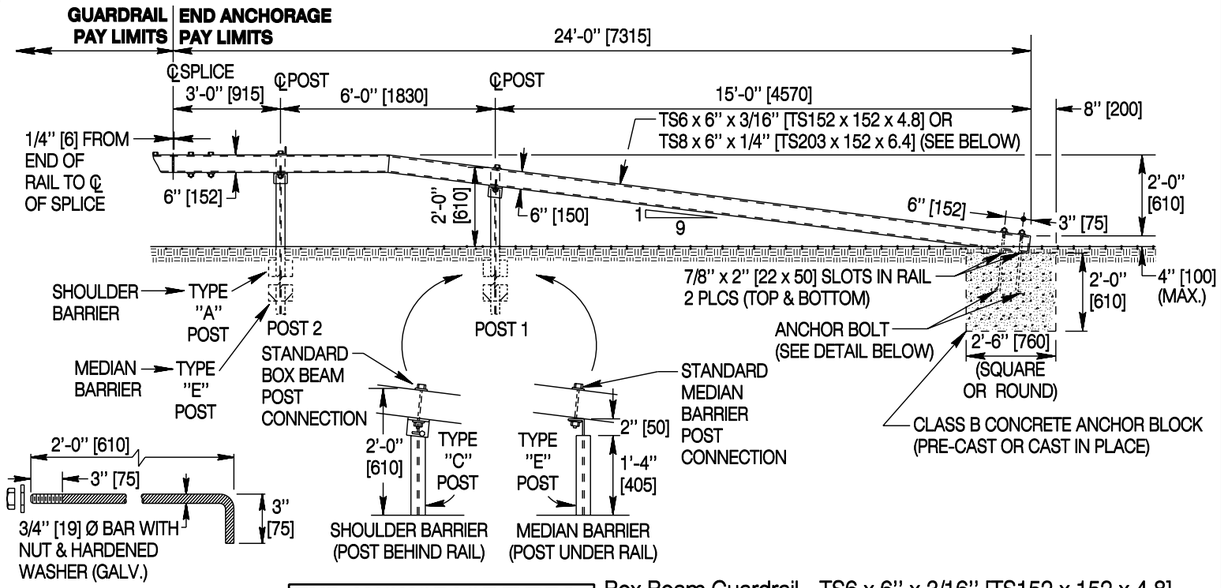

ANCHOR BOLT DETAIL

END ANCHORAGE TYPE I - Box Beam Guardrail - TS6 x 6" x 3/16" [TS152 x 152 x 4.8]
Box Beam Median Barrier - TS8 x 6" x 1/4" [TS203 x 152 x 6.4]

Note: Flare Type I End Anchorages outside the clear-zone.

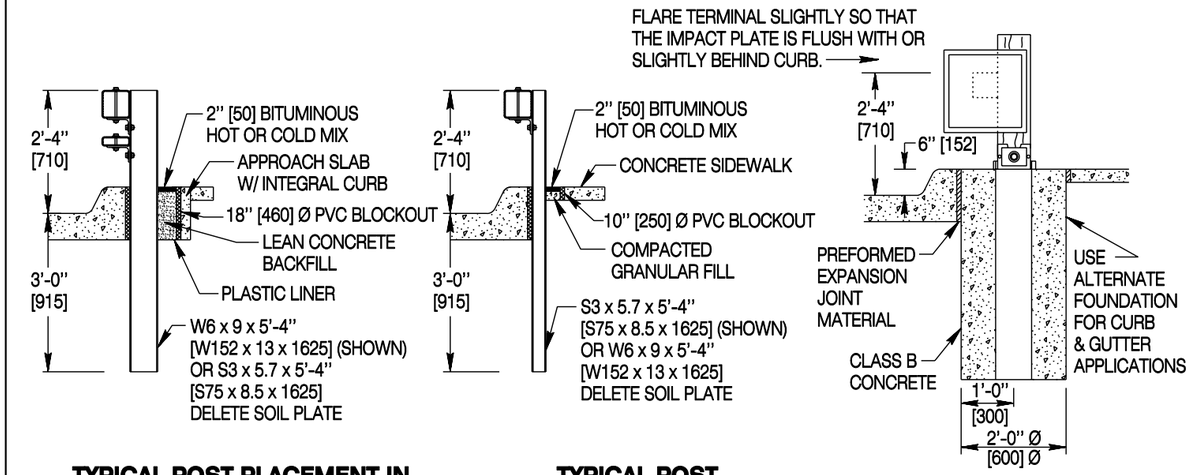

TYPICAL POST PLACEMENT IN APPROACH SLAB WITH INTEGRAL CURB | **TYPICAL POST PLACEMENT IN SIDEWALK** | **WY-BET TERMINAL PLACEMENT IN SIDEWALK**

GUARDRAIL POST PLACEMENT INTO CONCRETE SURFACES

(**Note:** Curb & Gutter is not used on high speed roadways)

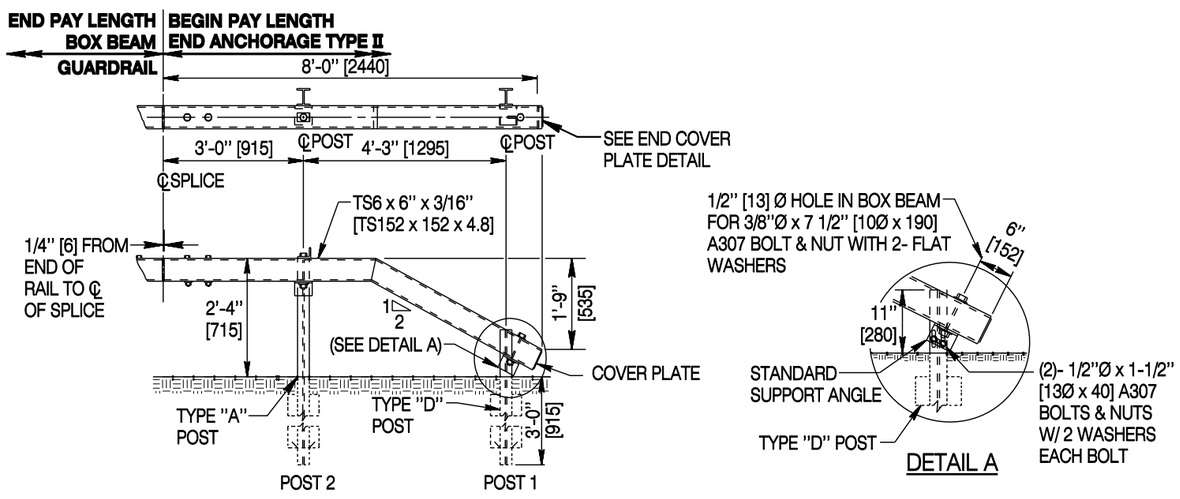

DETAIL A

END ANCHORAGE TYPE II

Note: Only use Type II End Anchorages for the downstream terminal of a guardrail run on one-way traffic roadways (such as divided highways). Place Type II anchorages at least 48 ft. [15.0 m] downstream of the hazard.

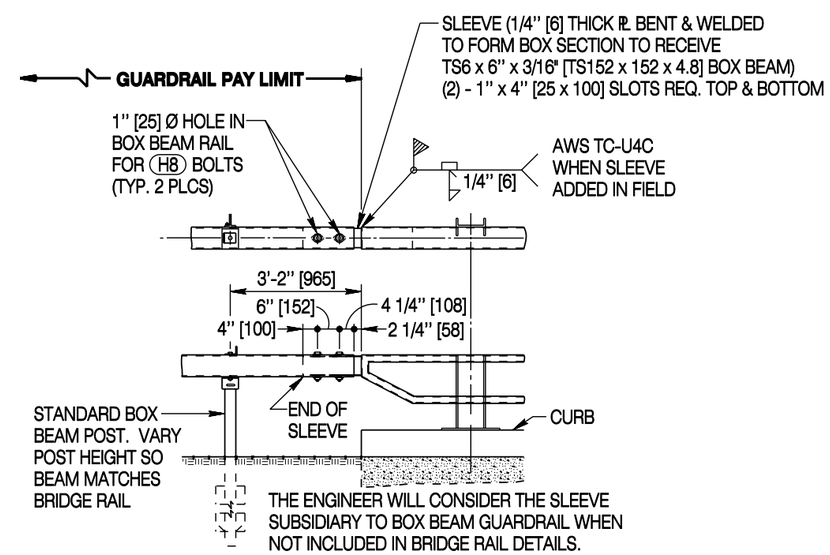

EXIT END CONNECTION TO STEEL BRIDGE RAILING

(Only for exit ends of one-way traffic bridges i.e. divided highways)

Designed by: WBW	INSTALLATION DETAILS - END ANCHORAGE TYPE I AND II AND MISC. DETAILS
Drawn by: GLD	
Checked by: WBW	
Previous Dwg. No. 606-02C	

Note: Units shown in brackets [ ] are metric and are in millimeters (mm) unless other units are shown.

WYOMING DEPARTMENT OF TRANSPORTATION

BOX BEAM GUARDRAIL

STANDARD PLAN

STANDARD PLAN NUMBER **606-6**

SHEET 7 of 9

Issued by: ENGINEERING SERVICES

Date Issued: NOVEMBER, 2004

FILE: j:\Stan\Dual_Std_Wrk\6066_07.dgn

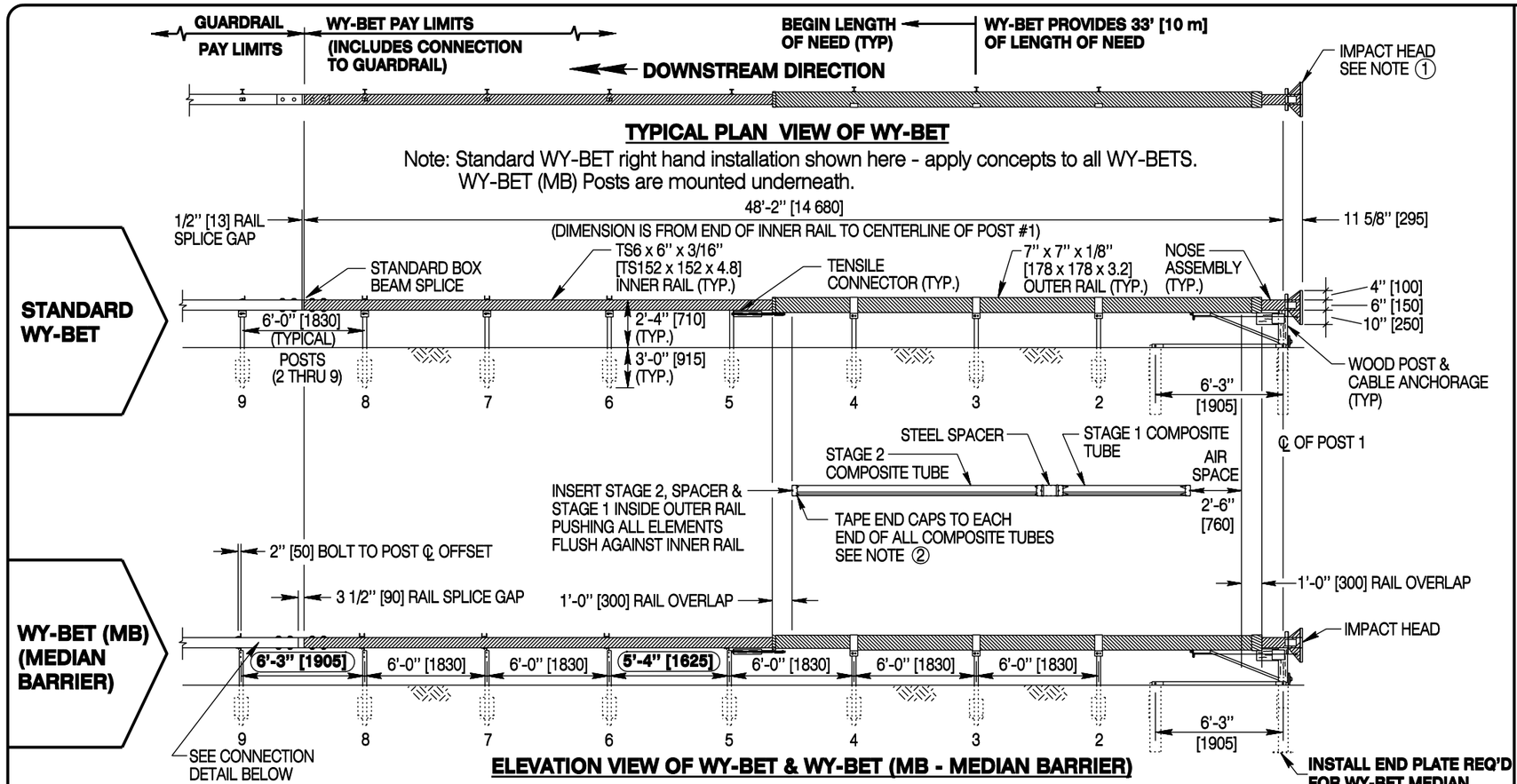

ELEVATION VIEW OF WY-BET & WY-BET (MB - MEDIAN BARRIER)

Note: WY-BET & WY-BET (MB) are similar except for the guardrail connection, post type, post spacing, post connection hardware, and end plate on the foundation tube for post 1.

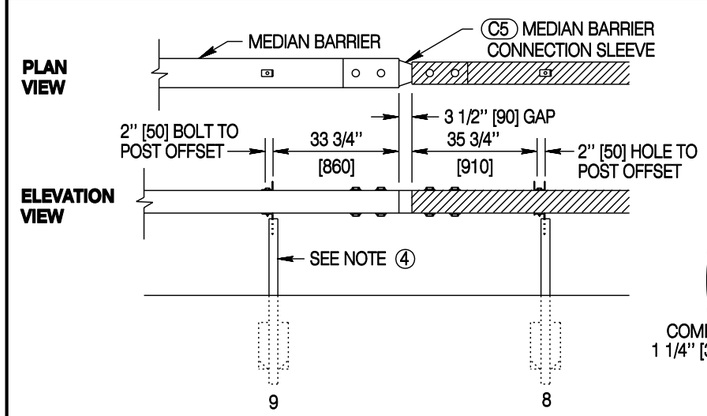

WY-BET (MB) CONNECTION TO MEDIAN BARRIER

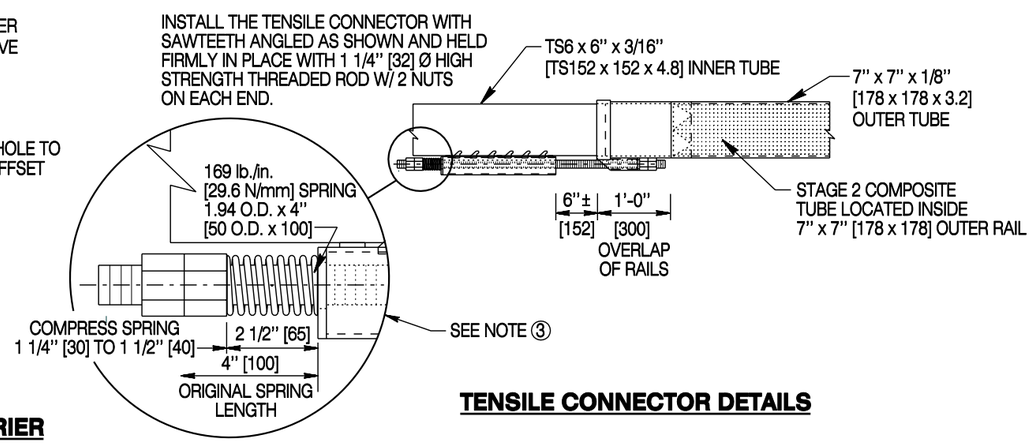

TENSILE CONNECTOR DETAILS

WY-BET & WY-BET (MB) GENERAL NOTES

① For tangent guardrail installations where the face of the Guardrail at the impact head of the terminal is less than 3 ft.[915] from the shoulder break point, realign the guardrail and terminal as shown in detail on **Sheet 1** of this standard plan.

② **COMPOSITE TUBES:** Tape end caps by double wrapping with 4" [100] wide duct tape or a 4X wrap of 2" [50] wide duct tape. Ensure a minimum of 2 1/2" [65] of tape on the end cap and 2 1/2" [65] of tape on the composite tubes. Place composite tubes and spacer inside outer rail element as shown.

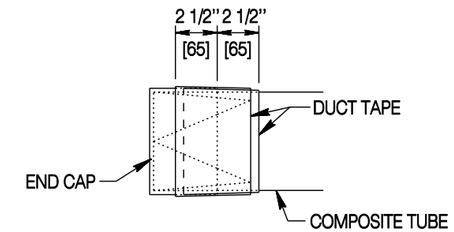

③ **TENSIONING THE WY-BET:** Tighten the cable anchor and the tensile connection without the spring installed. After the cable anchor is taut and the correct overlap attained at each end of the outer rail, remove the nut on the threaded rod to install the spring. Reinstall the nut and compress the spring 1 1/4" [30] to 1 1/2" [40]. Do not fully compress the spring! Place the second nut on each end of the tensile connector to ensure first nut does not back off.

④ **WY-BET MEDIAN BARRIER INSTALLATIONS:** For connection of WY-BET's to older paddle mounted median barrier, remove paddles and use bolted connection for minimum of 10 posts beyond the WY-BET. (See Sheet 5.)

⑤ **USE ONLY COMPONENTS** furnished by the manufacturer for the terminal. Do not substitute standard guardrail components.

Designed by: WBW	INSTALLATION DETAILS - WY-BET
Drawn by: GLD	
Checked by: WBW	
Previous Dwg. No. 606-02C	

Note: Units shown in brackets [ ] are metric and are in millimeters (mm) unless other units are shown.

WYOMING DEPARTMENT OF TRANSPORTATION

BOX BEAM GUARDRAIL

STANDARD PLAN

STANDARD PLAN NUMBER **606-6**

SHEET 8 of 9

Issued by: ENGINEERING SERVICES

Date Issued: NOVEMBER, 2004

FILE: j:\Stan\Dual_Std_Wrk\6066_08.dgn

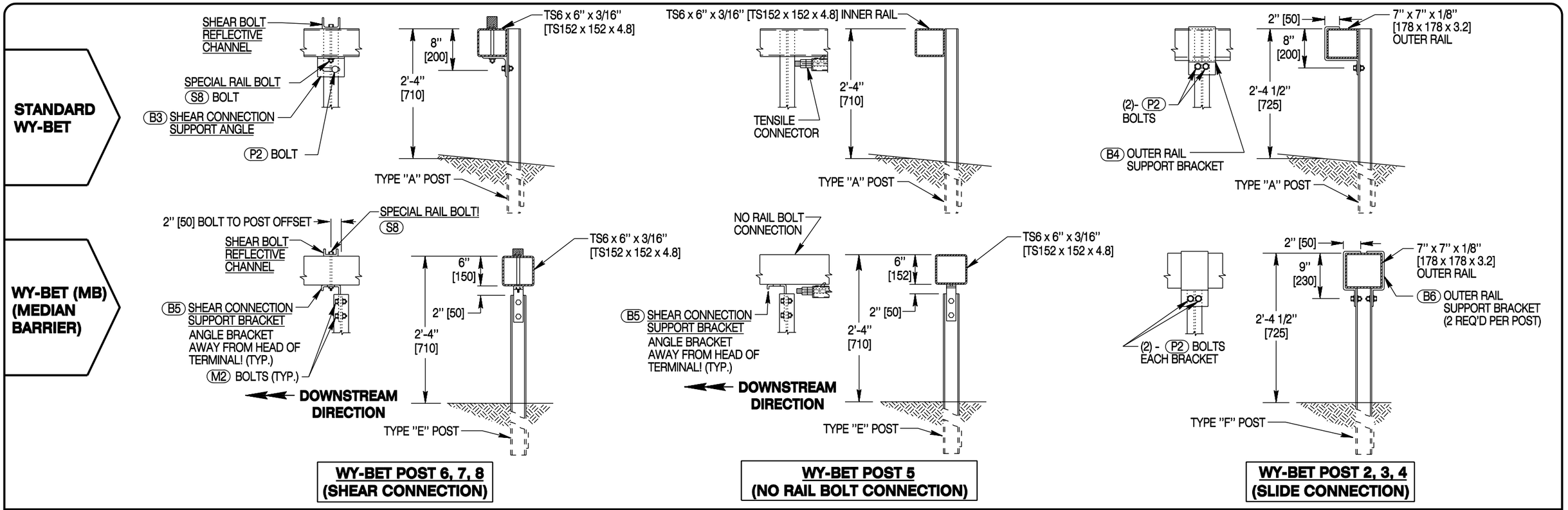

BOLT REQUIREMENTS

POST BOLTS - HEX HEAD (MILD STEEL)	
(M2)	3/4" x 1 1/2" [19 x 40] (A307) + 2 WASHERS (F844) + 1 NUT (A563)
(P2)	1/2" x 1 1/2" [13 x 40] (A307) + 2 WASHERS (F844) + 1 NUT (A563)
SHEAR BOLTS - HEX HEAD (MILD STEEL)	
(S8)	5/16" x 7 1/2" [8 x 190] (A307) + 1 WASHER (F844) + 1 NUT (A563)
X - MISC. BOLTS - HEX HEAD (MILD STEEL)	
(X1)	5/8" x 9 1/2" [16 x 240] (A307) + 2 WASHERS (F844) + 1 NUT (A563)
(X2)	5/8" x 7 1/2" [16 x 190] (A307) + 2 WASHERS (F844) + 1 NUT (A563)
(X3)	1/2" x 9" [13 x 230] (A307) + 1 NUT (A563)

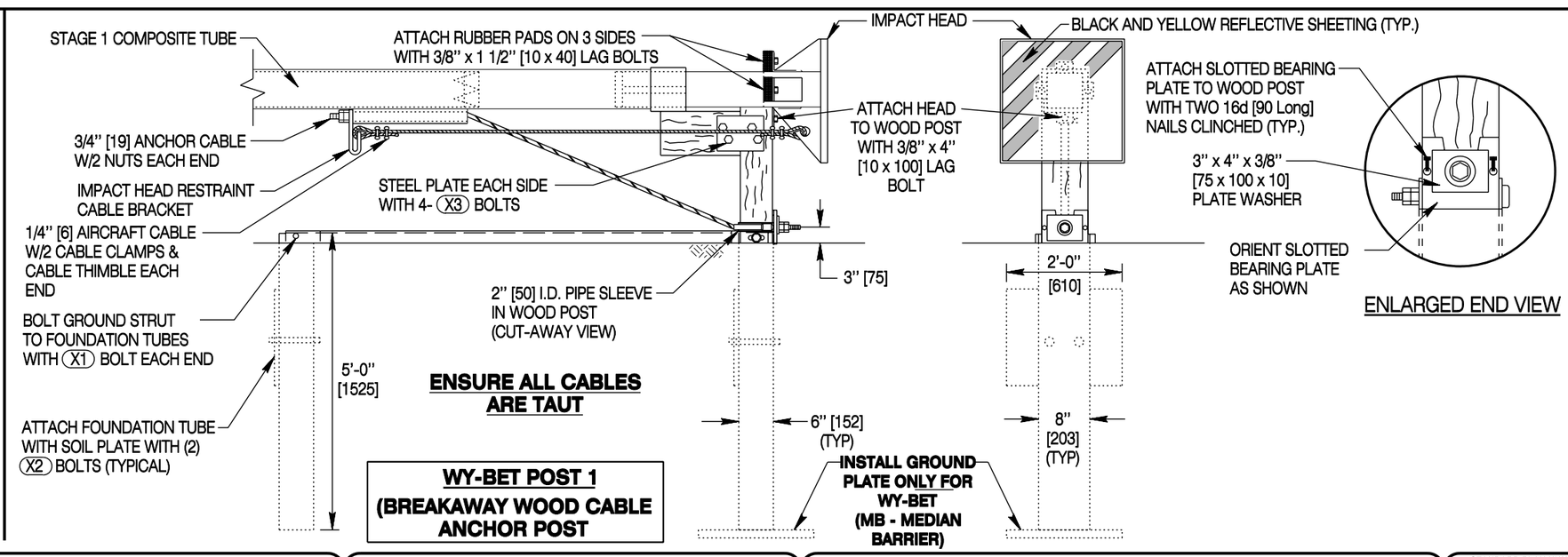

Designed by: WBW	
Drawn by: GLD	
Checked by: WBW	
Previous Dwg. No. 606-02C	

INSTALLATION DETAILS - WY-BET (CONTINUED)

Note: Units shown in brackets [ ] are metric and are in millimeters (mm) unless other units are shown.

WYOMING DEPARTMENT OF TRANSPORTATION

BOX BEAM GUARDRAIL

STANDARD PLAN

STANDARD PLAN NUMBER **606-6**

SHEET 9 of 9

Issued by: ENGINEERING SERVICES

Date Issued: NOVEMBER, 2004

FILE: j:\Stan\Dual_Std_Wrk\6066_09.dgn

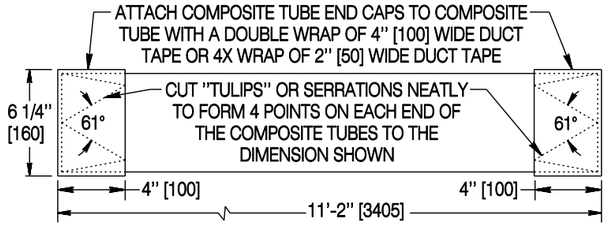

11'-2" [3405] COMPOSITE TUBE (STAGE 2)

(6"Ø x 1/4" [150Ø x 6.4] WALL THICKNESS)

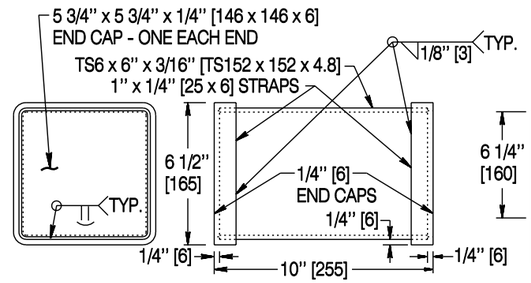

STEEL SPACER DETAILS

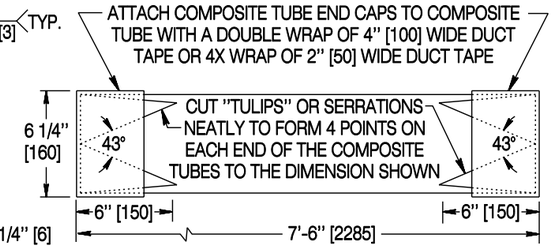

7'-6" [2285] COMPOSITE TUBE (STAGE 1)

(6"Ø x 1/8" [150Ø x 3.2] WALL THICKNESS)

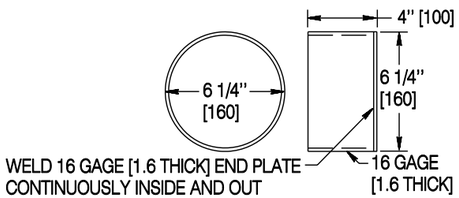

COMPOSITE TUBE END CAP DETAIL (TYP.)

EXTRUDED FIBERGLASS COMPOSITE TUBES & STEEL SPACER DETAILS
(Internal components for the 7" x 7" [178 x 178] Outer Rail)

Note: Fabricate Composite Tubes meet crush characteristics specified.

FABRICATION NOTES

1. Proper performance of the end terminal depends on maintaining a relatively low mass for the 7" x 7" x 1/8" [178 x 178 x 3.2] Outer Rail, therefore the wall thickness cannot be altered.
2. Extend the 1" x 1/4" [25 x 6] steel reinforcing straps 1/4" [6] beyond the end of the TS6 x 6" x 3/16" [TS152 x 152 x 4.8] inner rail and the intermediate spacer to facilitate welding of the end caps. Maintain a 1/8" [3] gap all around the end cap to facilitate a good weld all around the end cap.
3. The department will allow two - 1/2" [13] holes to be drilled in the side of the intermediate spacer to act as vent holes during galvanization.
4. For straps & plates, use A36 steel.
5. After fabrication and galvanization and prior to shipment, confirm inner rail slides smoothly inside outer rail without any binding.

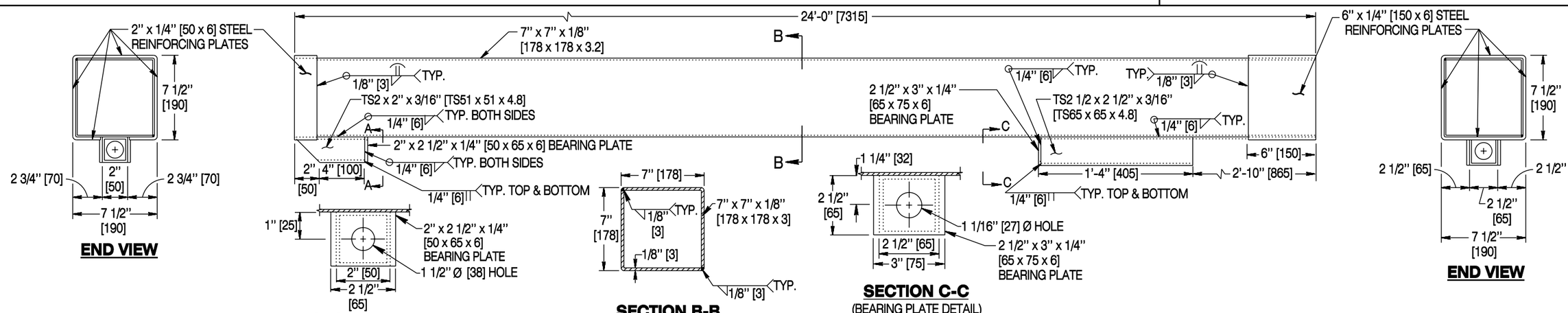

7" x 7" x 1/8" [178 x 178 x 3.2] OUTER RAIL DETAILS

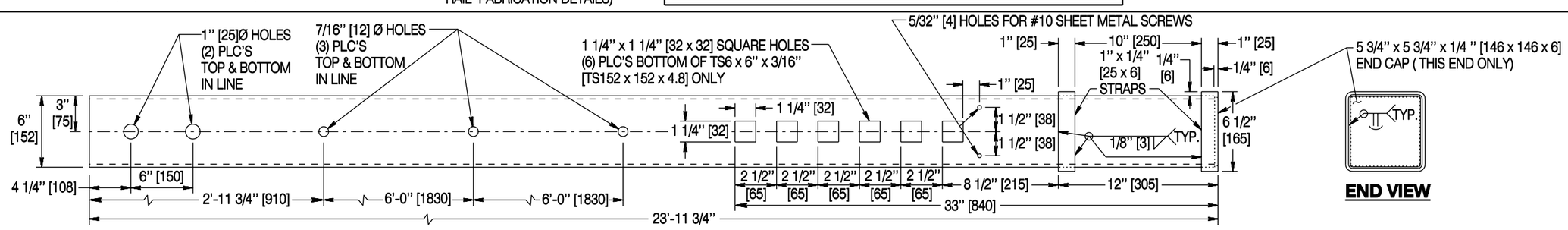

TS6 x 6" x 3/16" [TS152 x 152 x 4.8] INNER RAIL DETAILS

Designed by: WBW	WY-BET RAILS AND COMPOSITE TUBES
Drawn by: GLD	
Checked by: WBW	
Previous Dwg. No. 606-02C	

Note: Units shown in brackets [ ] are metric and are in millimeters (mm) unless other units are shown.

WYOMING DEPARTMENT OF TRANSPORTATION

BOX BEAM GUARDRAIL FABRICATION STANDARDS

STANDARD PLAN

STANDARD PLAN NUMBER **606-7**

SHEET 1 of 6

Issued by: ENGINEERING SERVICES

Date Issued: NOVEMBER, 2004

FILE: j:\Stan\Dual_Std_Wrk\6067_01.dgn

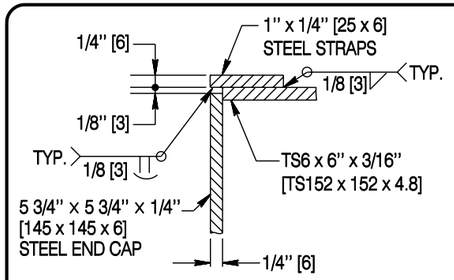

SECTION B-B
(End cap weld detail)

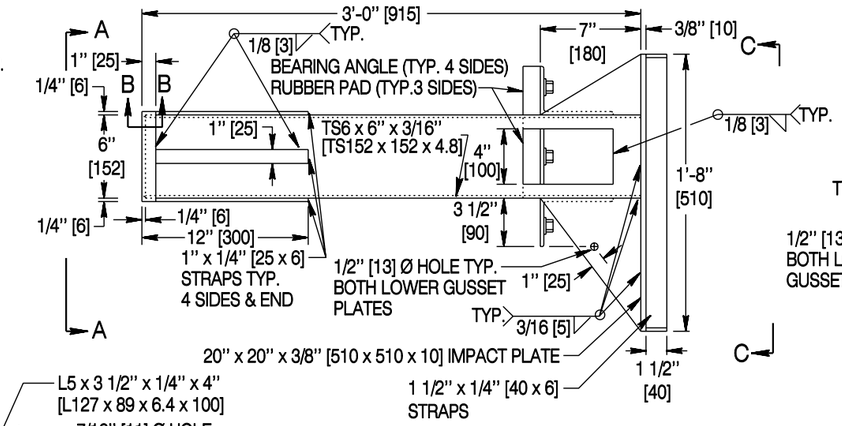

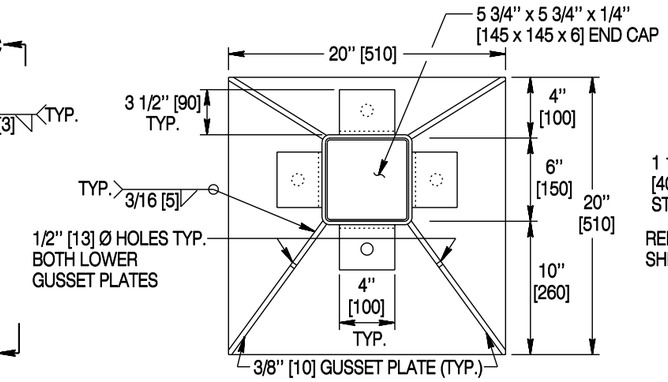

SECTION A-A

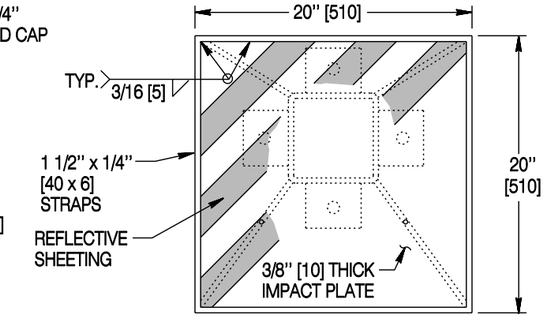

SECTION C-C

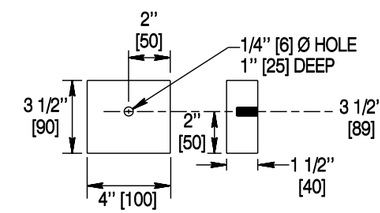

RUBBER PAD
(3 Req.)

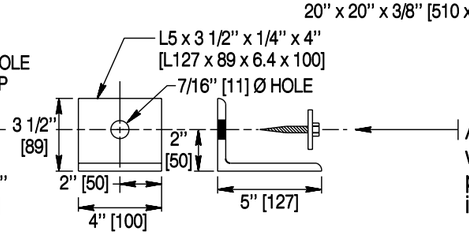

BEARING ANGLE
(4- Req.-weld to impact head as shown above)

Attach rubber pad to bearing angle with 3/8" x 1 1/2" [10 x 40] lag bolt & washer on three angles. Ensure fourth angle bears directly against wood post and attach with a 3/8" x 4" [10 x 100] lag bolt & washer, screwed into post.

IMPACT HEAD FABRICATION DETAILS

FABRICATION NOTES

1. The department will allow two - 1/2" [13] Ø venting and pick-up holes to be drilled into each end of end section on bottom to facilitate galvanization.
2. Ensure 1" x 1/4" [25 x 6] Straps overlap TS6 x 6" x 3/16" [TS152 x 152 x 4.8] by 1/4" [6].
3. Maintain a 1/8" [3] gap between end cap and 1" x 1/4" [25 x 6] straps for welding.
4. For straps and plates use A36 steel.

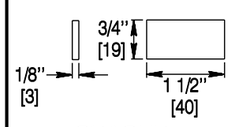

SPACER

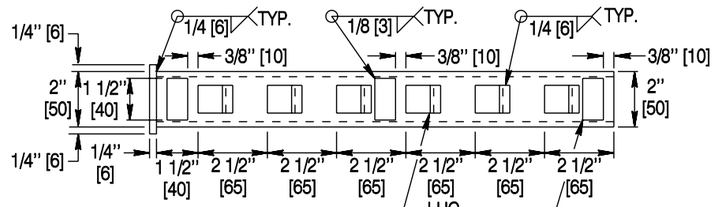

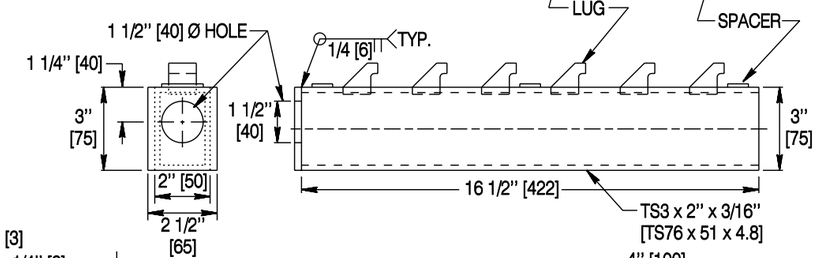

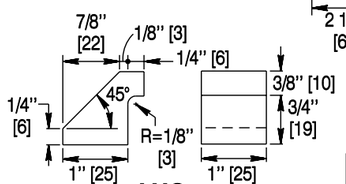

LUG

TENSILE CONNECTOR FABRICATION DETAILS

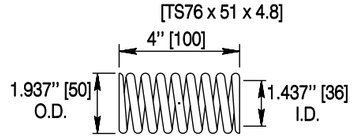

169 lb/in [29.6 N/mm] COMPRESSION SPRING

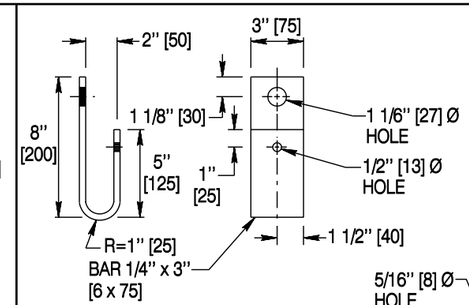

IMPACT HEAD RESTRAINT CABLE BRACKET

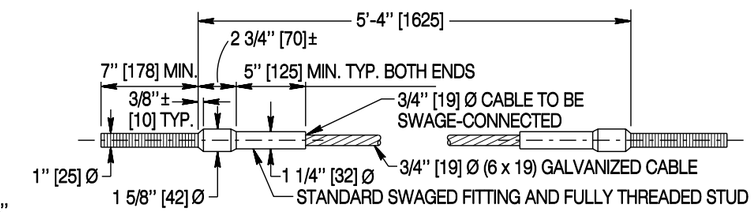

3/4" [19] CABLE ANCHOR ASSEMBLY

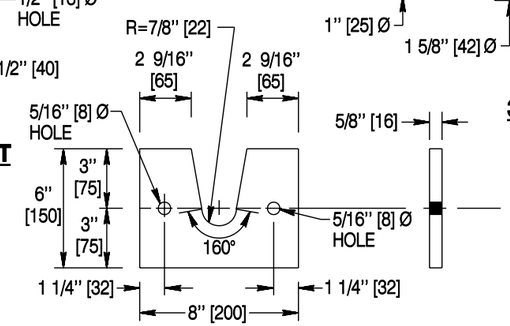

SLOTTED BEARING PLATE

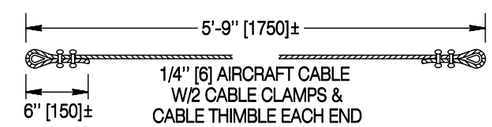

NOSE RESTRAINT CABLE

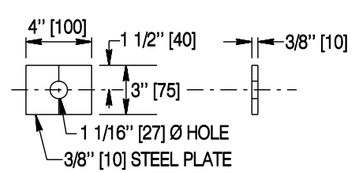

PLATE WASHER

CABLE ANCHOR FABRICATION DETAILS

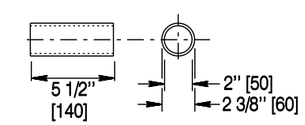

BREAKAWAY TERMINAL POST SLEEVE

Designed by: WBW	WY-BET IMPACT HEAD, TENSILE CONNECTOR AND CABLE ANCHORAGE COMPONENTS
Drawn by: GLD	
Checked by: WBW	
Previous Dwg. No. 606-02C	

Note: Units shown in brackets [ ] are metric and are in millimeters (mm) unless other units are shown.

WYOMING DEPARTMENT OF TRANSPORTATION

BOX BEAM GUARDRAIL FABRICATION STANDARDS

STANDARD PLAN

STANDARD PLAN NUMBER
606-7
SHEET 2 of 6
Issued by: ENGINEERING SERVICES
Date Issued: NOVEMBER, 2004

FILE: j:\Stan\Dual_Std_Wrk\6067_02.dgn

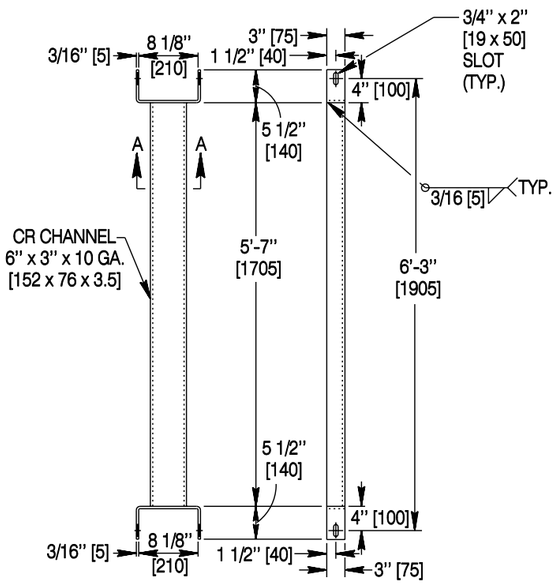

THIS SIDE UP

SECTION A - A

FOUNDATION TUBE GROUND STRUT

1 Req'd for WY-BET
1 Req'd for WY-BET (MB)

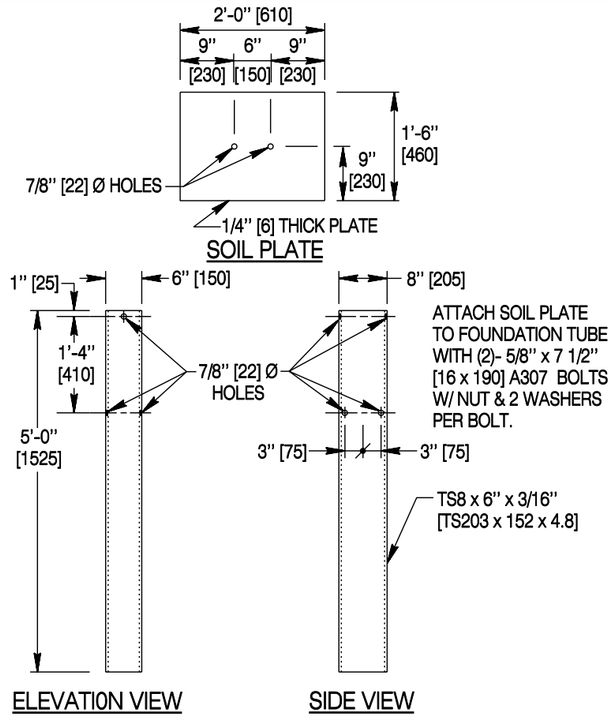

STANDARD FOUNDATION TUBE (INCL. SOIL PLATE)

2 Req'd for WY-BET
1 Req'd for WY-BET (MB) plus 1 foundation tube with base plate

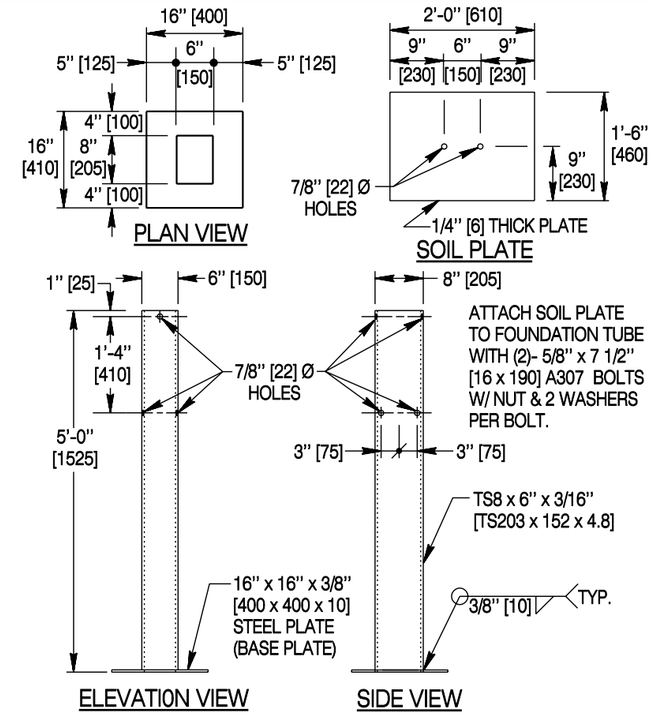

FOUNDATION TUBE WITH BASE PLATE (INCL. SOIL PLATE)

1 Req'd for WY-BET (MB)

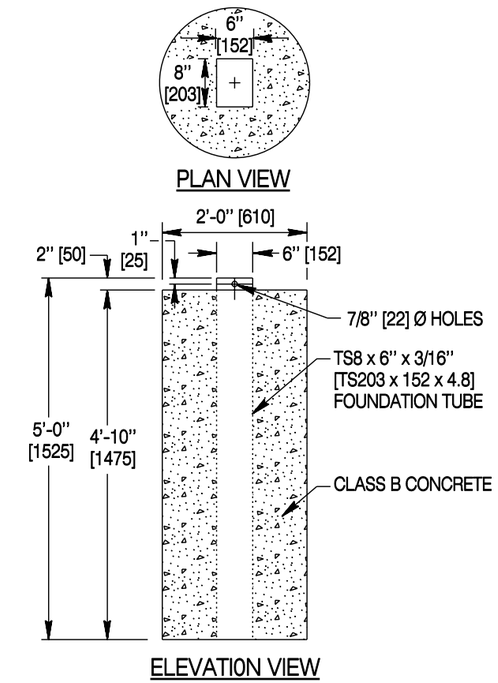

ALTERNATE FOUNDATION SYSTEM FOR WY-BET & WY-BET (MB)

(Replaces two foundation tubes and ground strut)

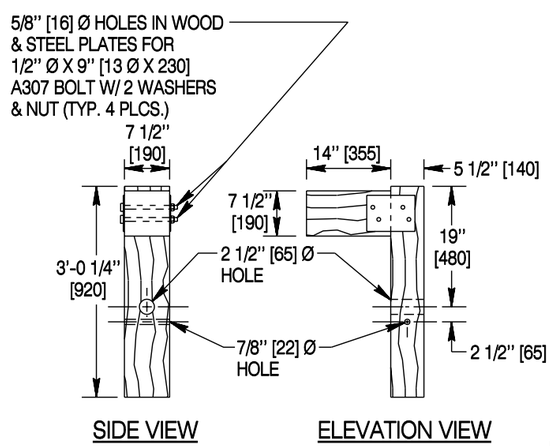

WY-BET BREAKAWAY WOOD POST

For WY-BET & WY-BET (MB) Post #1

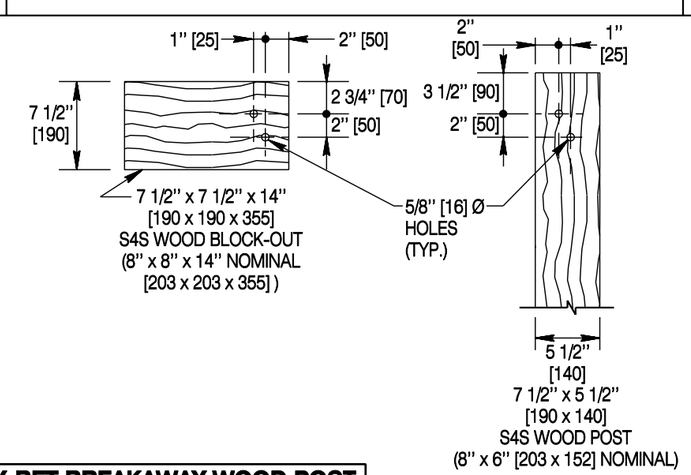

ENLARGED DETAILS

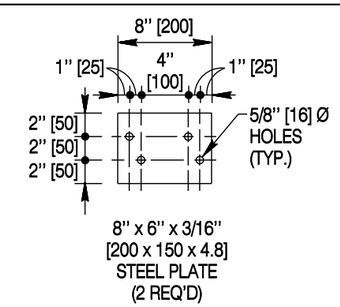

Designed by: WBW	
Drawn by: GLD	WY-BET WOOD POST AND FOUNDATION TUBES
Checked by: WBW	
Previous Dwg. No. 606-02C	

Note: Units shown in brackets [ ] are metric and are in millimeters (mm) unless other units are shown.

WYOMING DEPARTMENT OF TRANSPORTATION

BOX BEAM GUARDRAIL FABRICATION STANDARDS

STANDARD PLAN

STANDARD PLAN NUMBER
606-7
SHEET 3 of 6

Issued by: ENGINEERING SERVICES
Date Issued: NOVEMBER, 2004

FILE: j:\Stan\Dual_Std_Wrk\6067_03.dgn

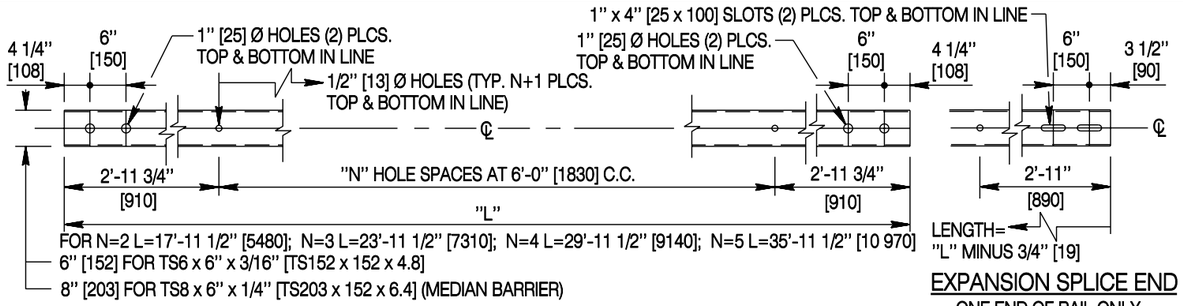

STANDARD RAIL ELEMENTS (6'-0" [1830] POST SPACING) FOR:

1) BOX BEAM GUARDRAIL TS6 x 6" x 3/16" [TS152 x 152 x 4.8]
2) BOX BEAM MEDIAN BARRIER (MB) TS8 x 6" x 1/4" [[TS203 x 152 x 6.4]

EXPANSION SPLICE END

ONE END OF RAIL ONLY. USE REQ'D FOR BOTH RAILS AT THE EXPANSION SPLICE.

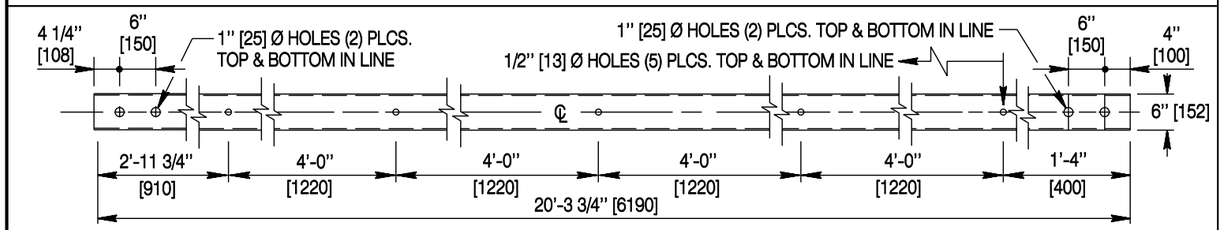

BRIDGE RAIL CONNECTION - TRANSITION SECT. (1st UPPER TUBE) TS6 x 6" x 3/16" [TS152 x 152 x 4.8]

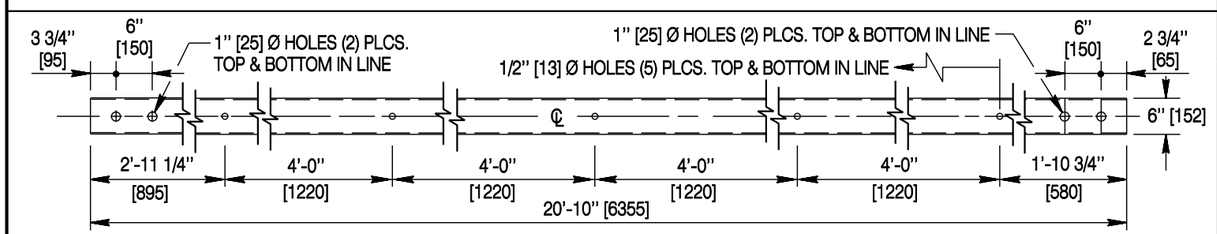

BRIDGE RAIL CONNECTION - TRANSITION SECT. (1st LOWER TUBE) TS6 x 2" x 1/4" [TS152 x 51 x 6.4]

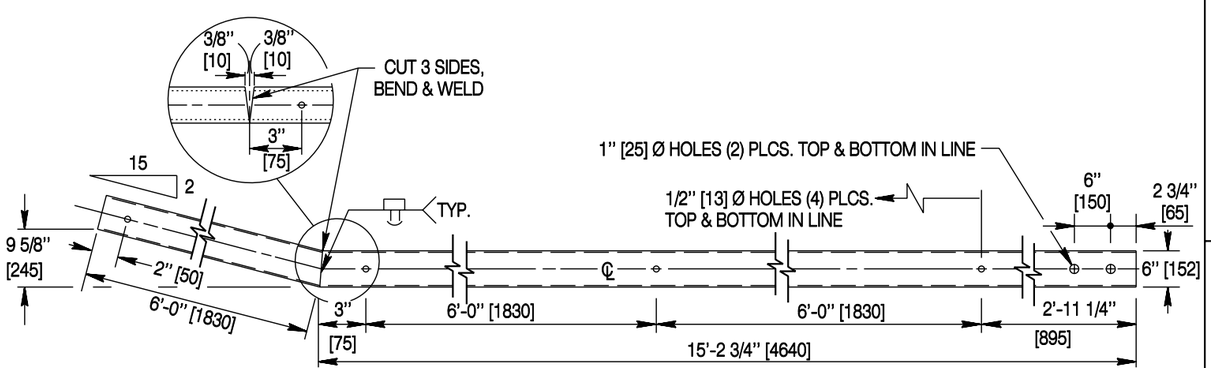

BRIDGE RAIL CONNECTION - TRANSITION SECT. (FLARED LOWER TUBE) TS6 x 2" x 1/4" [TS152 x 51 x 6.4]

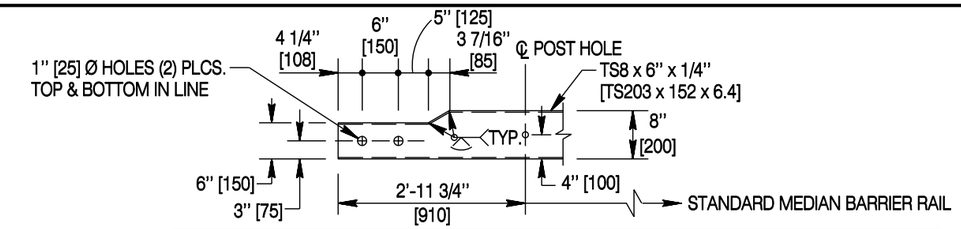

EXIT END BRIDGE CONNECTION DETAIL FOR MEDIAN BARRIER RAIL

(ONE-WAY TRAFFIC BRIDGES ONLY)

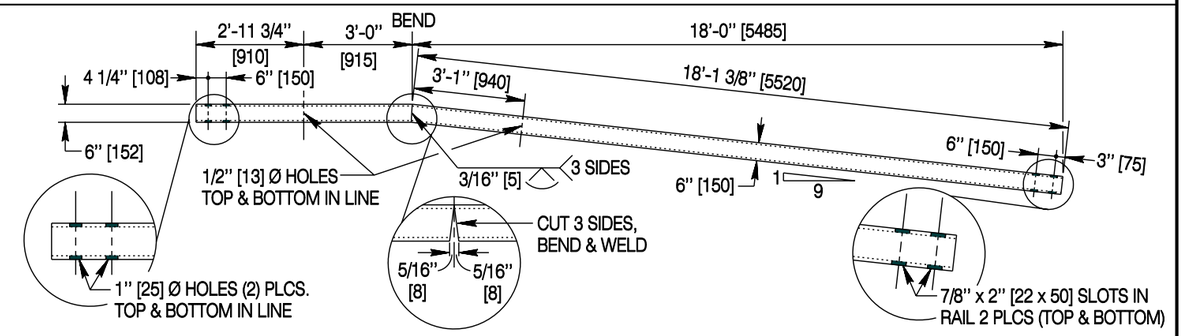

END ANCHORAGE TYPE I -

BOX BEAM GUARDRAIL - TS6 x 6" x 3/16" [TS152 x 152 x 4.8]
BOX BEAM MEDIAN BARRIER - TS8 x 6" x 1/4" [TS203 x 152 x 6.4]

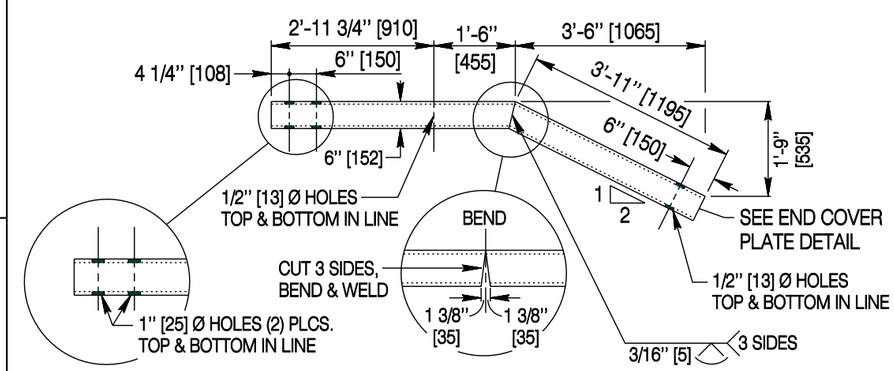

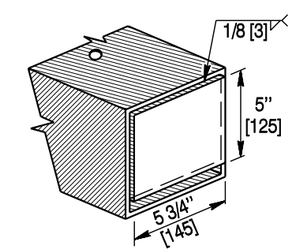

END COVER PLATE DETAIL

BAR 5" x 3/16" x 0'-5 3/4" [125 x 4.8 x 145]

END ANCHORAGE TYPE II -

BOX BEAM GUARDRAIL - TS6 x 6" x 3/16" [TS152 x 152 x 4.8]

GENERAL FABRICATION NOTES

1. Typical rail elements are depicted here. Use standard rail elements wherever possible; certain guardrail layouts may require specially fabricated components.
2. Ensure a minimum nominal rail length of 18 ft. [5490] unless otherwise approved by the engineer.

Designed by: WBW	STANDARD GUARDRAIL RAIL ELEMENTS
Drawn by: GLD	
Checked by: WBW	
Previous Dwg. No. 606-02C	

Note: Units shown in brackets [ ] are metric and are in millimeters (mm) unless other units are shown.

WYOMING DEPARTMENT OF TRANSPORTATION

BOX BEAM GUARDRAIL FABRICATION STANDARDS

STANDARD PLAN

STANDARD PLAN NUMBER
606-7
SHEET 4 of 6

Issued by: ENGINEERING SERVICES
Date Issued: NOVEMBER, 2004

FILE: j:\Stan\Dual_Std_Wrk\6067_04.dgn

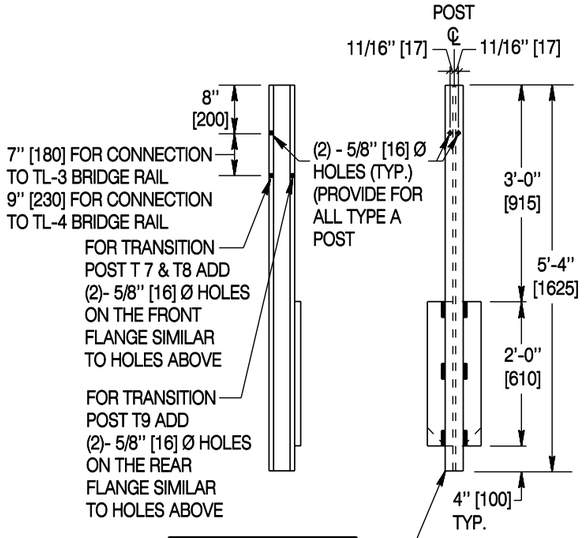

TYPE "A" POST

(STANDARD BOX BEAM POST)
FOR: 1) STANDARD BOX BEAM GUARDRAIL RUNS
2) TRANSITION POST T 7-T10
3) WY-BET POST 2 - 8
4) END ANCHORAGE TYPE I, POST 2
5) END ANCHORAGE TYPE II, POST 2

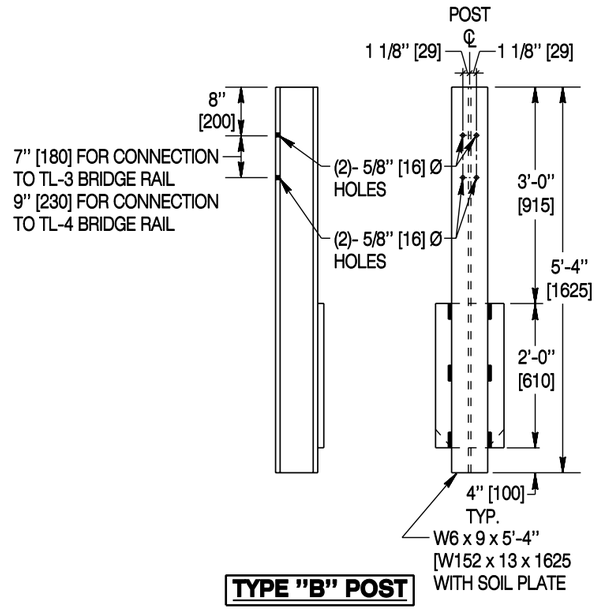

TYPE "B" POST

FOR: 1) TRANSITION POST T1-T6

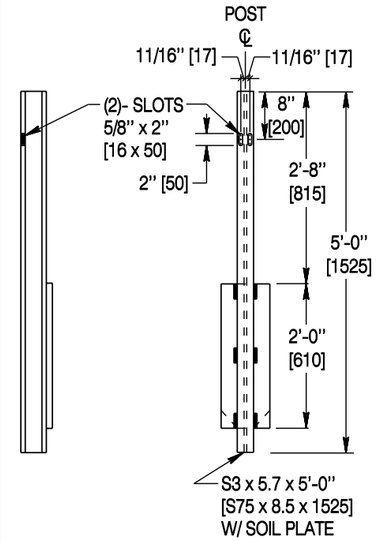

TYPE "C" POST

FOR: BB END ANCHORAGE TYPE I, POST 1

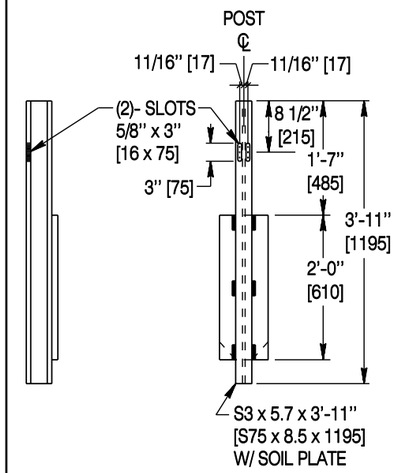

TYPE "D" POST

FOR: BB END ANCHORAGE TYPE II, POST 1

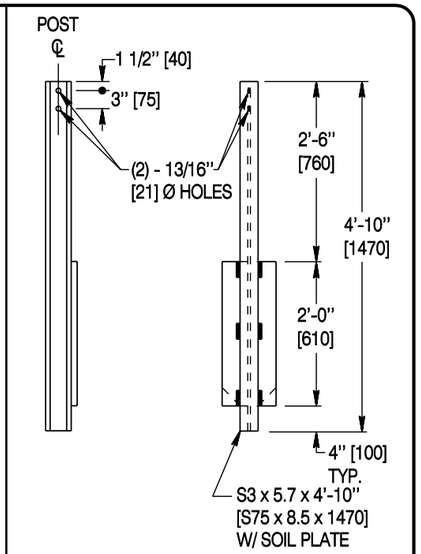

TYPE "E" POST

(STANDARD MEDIAN BARRIER POST)
FOR: 1) STANDARD MEDIAN BARRIER RUNS
2) WY-BET (MB) POST 5 - 8

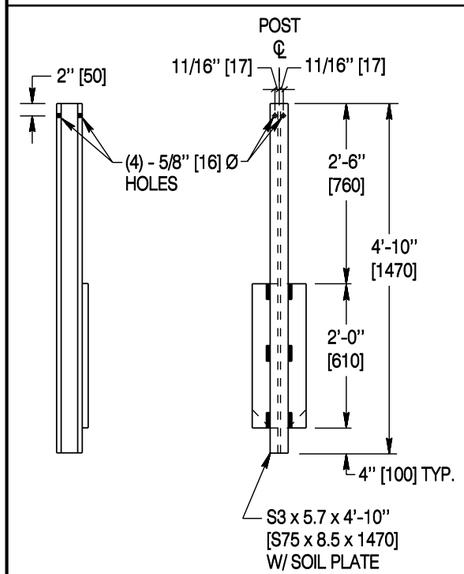

TYPE "F" POST

FOR: WY-BET (MB) POST 2 - 4

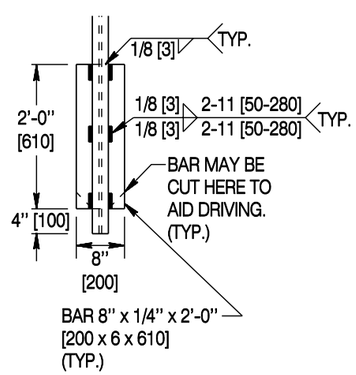

TYPICAL SOIL PLATE DETAIL

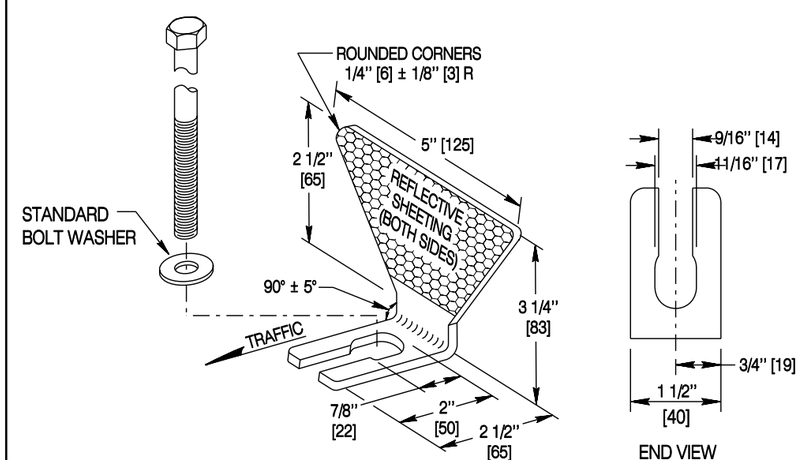

NOTE: Use reflective sheeting that is yellow for all median installations and white for all shoulder installations.

REFLECTIVE TAB DETAIL

Manufacture reflector tabs from 12 to 14 gage [2.8 to 2.0 thick] steel. Place a reflective tab on every fourth post for standard runs of Box Beam & Box Beam Median Barrier. Place a standard bolt washer under the head of the bolt.

Designed by: WBW	GUARDRAIL POSTS & REFLECTIVE TABS
Drawn by: GLD	
Checked by: WBW	
Previous Dwg. No. 606-02C	

Note: Units shown in brackets [ ] are metric and are in millimeters (mm) unless other units are shown.

WYOMING DEPARTMENT OF TRANSPORTATION

BOX BEAM GUARDRAIL FABRICATION STANDARDS

STANDARD PLAN

STANDARD PLAN NUMBER
606-7
SHEET 5 of 6
Issued by: ENGINEERING SERVICES
Date Issued: NOVEMBER, 2004

FILE: j:\Stan\Dual_Std_Wrk\6067_05.dgn

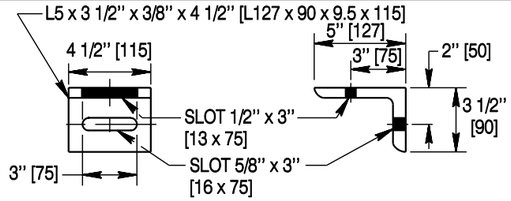

B1 STANDARD BOX BEAM SUPPORT ANGLE

USE (1) - P2 BOLT AND EITHER (1) - R8 BOLT FOR 6" x 6" [152 x 152] RAIL OR (1) - R4 BOLT FOR 6" x 2" [152 x 51] RAIL

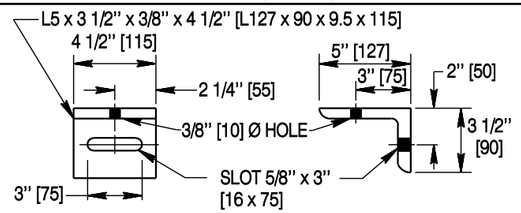

B3 WY-BET SHEAR CONNECTION SUPPORT ANGLE

USE (1) - P2 & (1) - S8 BOLT

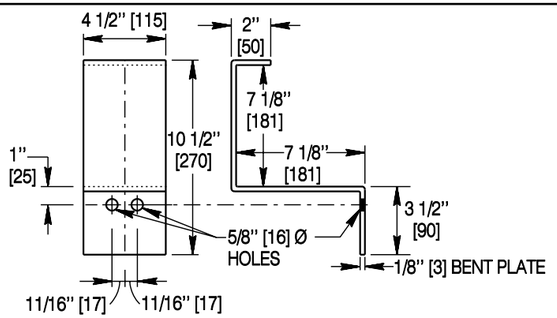

B4 WY-BET OUTER RAIL SUPPORT BRACKET

USE (2) - P2 BOLTS

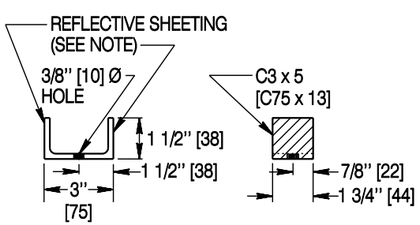

NOTE: Use reflective sheeting that is yellow for all median installations and white for all shoulder installations.

WY-BET SHEAR BOLT REFLECTIVE CHANNEL DETAIL

USE FOR WY-BET POSTS 6, 7, 8
USE 1 - S8 BOLT

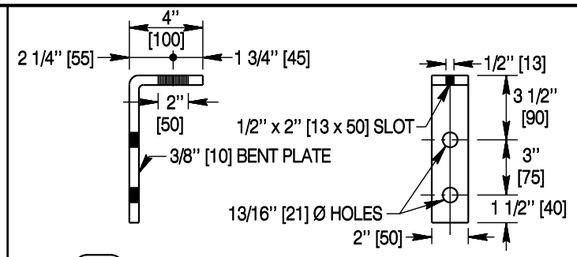

B2 MEDIAN BARRIER SUPPORT BRACKET

USE (2) - M2 & (1) - R8 BOLTS

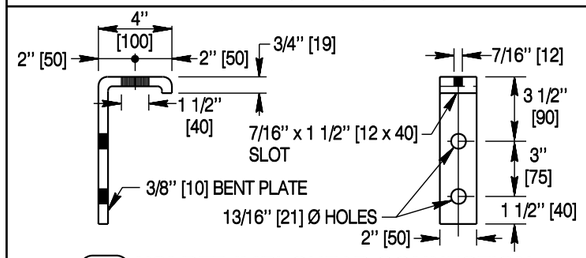

B5 WY-BET (MB) SHEAR CONNECTION SUPPORT BRACKET

USE (2) - M2 & (1) - S8 BOLTS

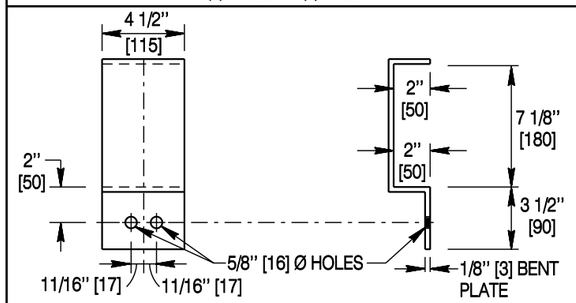

B6 WY-BET (MB) OUTER RAIL SUPPORT BRACKET

(Use 2 per post)

USE (2) - P2 BOLTS PER BRACKET

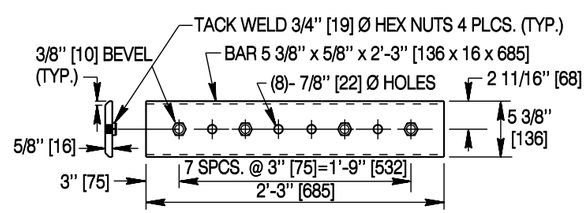

C1 STANDARD BOX BEAM SPLICE PLATE

(Use 2 per splice)

USE (4) - H2 BOLTS FOR EACH SPLICE PLATE

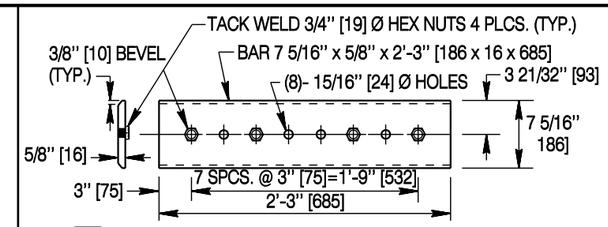

C2 STANDARD BOX BEAM MEDIAN BARRIER SPLICE PLATE

(Use 2 per splice)

USE (4) - H2 BOLTS FOR EACH SPLICE PLATE

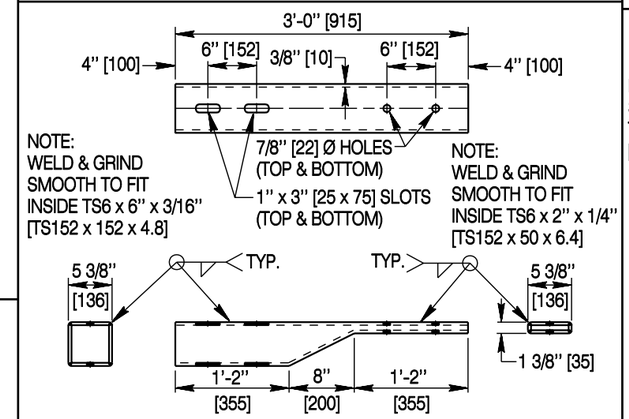

NOTE: Fabricate sleeve from 3/8" [10] A36 steel. Cut top & side walls to shape. Bend bottom wall as shown.

C3 UPPER BRIDGE RAIL CONNECTION SLEEVE

USE (2) - H4 & (2) - H8 BOLTS

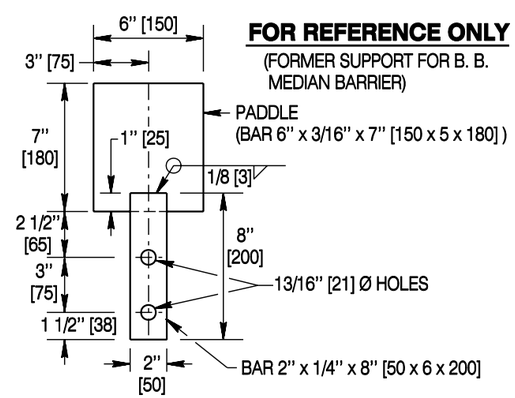

FORMER MEDIAN BARRIER SUPPORT PADDLE

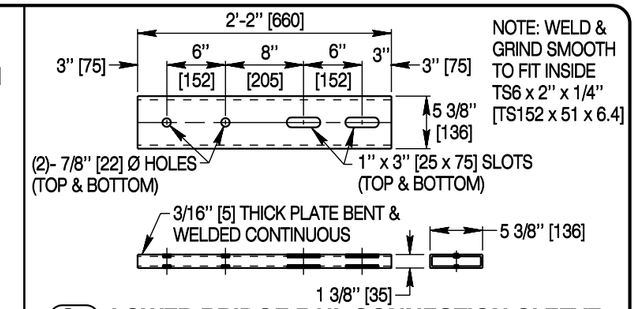

C4 LOWER BRIDGE RAIL CONNECTION SLEEVE

USE (4) - H4 BOLTS

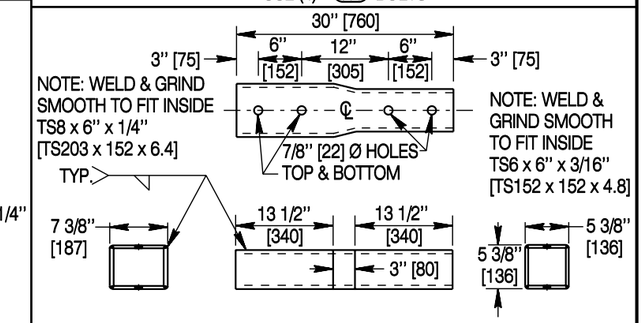

NOTE: Fabricate sleeve from 3/8" [10] A36 steel. Cut each top & bottom wall from continuous steel plate. Weld side walls at all junctions.

C5 MEDIAN BARRIER CONNECTION SLEEVE

USE (4) - H8 BOLTS

BOLT REQUIREMENTS

HIGH STRENGTH HEAVY HEX RAIL SPLICE BOLTS

- H2 3/4" x 2" [19 x 50] (A325) + 1 HARDENED WASHER (F436)
- H4 3/4" x 4" [19 x 100] (A325) + 2 HARDENED WASHERS (F436) + 1 NUT (A194-2HM)
- H8 3/4" x 8" [19 x 200] (A325) + 2 HARDENED WASHERS (F436) + 1 NUT (A194-2HM)

POST BOLTS - HEX HEAD (MILD STEEL)

- M2 3/4" x 1 1/2" [19 x 40] (A307) + 2 WASHERS (F844) + 1 NUT (A563)
- P2 1/2" x 1 1/2" [13 x 40] (A307) + 2 WASHERS (F844) + 1 NUT (A563)

RAIL BOLTS - HEX HEAD (MILD STEEL)

- R4 3/8" x 3 1/2" [10 x 90] (A307) + 2 WASHERS (F844) + 1 NUT (A563)
- R8 3/8" x 7 1/2" [10 x 190] (A307) + 2 WASHERS (F844) + 1 NUT (A563)

SHEAR BOLTS - HEX HEAD (MILD STEEL)

- S8 5/16" x 7 1/2" [8 x 190] (A307) + 1 WASHER (F844) + 1 NUT (A563)

Designed by: WBW	CONNECTION HARDWARE
Drawn by: GLD	
Checked by: WBW	
Previous Dwg. No. 606-02C	

Note: Units shown in brackets [ ] are metric and are in millimeters (mm) unless other units are shown.

WYOMING DEPARTMENT OF TRANSPORTATION

BOX BEAM GUARDRAIL FABRICATION STANDARDS

STANDARD PLAN

STANDARD PLAN NUMBER 606-7

SHEET 6 of 6

Issued by: ENGINEERING SERVICES

Date Issued: NOVEMBER, 2004

FILE: j:\Stan\Dual_Std_Wrk\6067_06.dgn

WIRE FENCE TYPE AND POST SPACING REQUIREMENTS

WIRE	COMBINATION WOVEN WIRE & BARBED WIRE			BARBED WIRE							WOVEN WIRE
HEIGHT	48" [1220]		45" [1145]	45" [1145]		48" [1220]				45" [1145]	50" [1270]
FENCE TYPE	TYPE A	TYPE B (INTERSTATE STANDARD)	TYPE C	TYPE D	TYPE E	TYPE F	TYPE G	TYPE H	WING	TEMPORARY	BARRIER
REMARKS	32" [812] WW-2 BW	32" [812] WW-3 BW	26" [660] WW-2 BW	4 BW-1 SMOOTH	3 BW-1 SMOOTH	4 BW	5 BW	6 BW	6 BW	3 BW	26" [660] WW
NOTES										①	②
CONFIGURATION	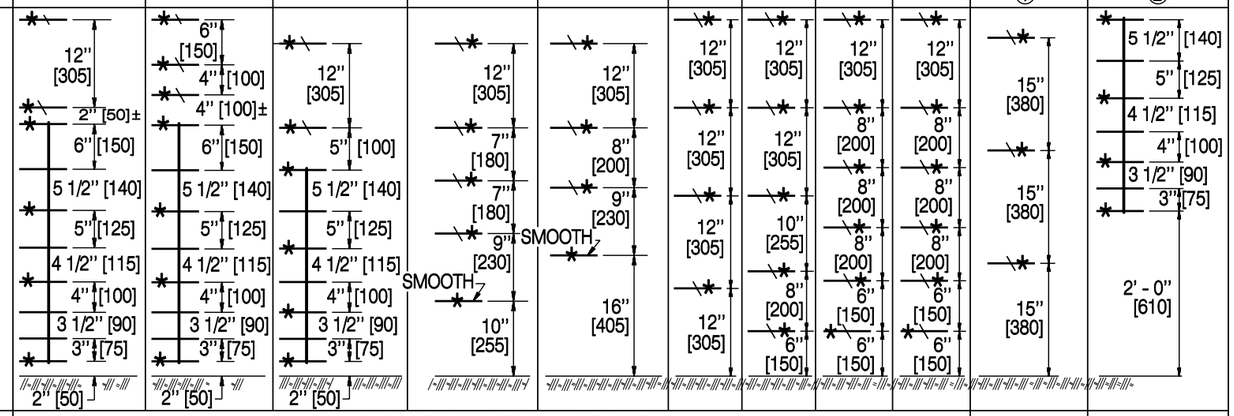										
LINE POST TYPE	WOOD, PLASTIC OR METAL AS SPECIFIED (IF WOOD OR PLASTIC LINE POSTS ARE USED, METAL LINE POSTS ARE REQUIRED AT SPECIFIED INTERVALS FOR LIGHTENING GROUNDING AS PER THE STANDARD SPECIFICATIONS)									METAL	METAL
MAX. LINE POST SPACING	16' - 6" [5.0 m]								8' - 3" [2.5 m]	20' - 0" [6.1 m] MAX.	16' - 6" [5.0 m]

Indicates which wires require a fence clip, tie wire or staple attachment to the post.

Indicates barbed wire.

SMOOTH Indicates twisted barbless wire.

NOTES

① Temporary fence runs 200 feet [61 m] and less do not require brace panels for fence terminations unless determined by the engineer they are needed for fence stability.

② Barrier Fence should only be specified for medians, not for right-of-way fence.

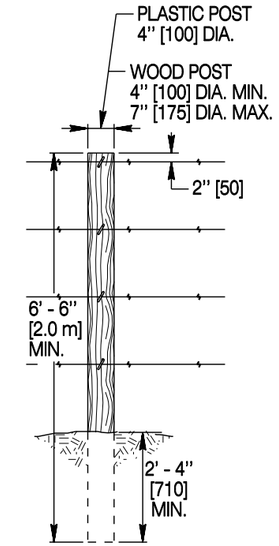

LINE POST DETAIL

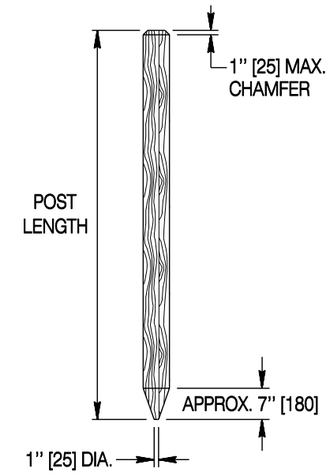

PERMISSABLE MODIFICATIONS FOR DRIVEN POSTS

WOOD AND PLASTIC LINE POSTS

Attach wire to wood post with fence staples. Attach wire to plastic posts with clips approved by the engineer per specifications.

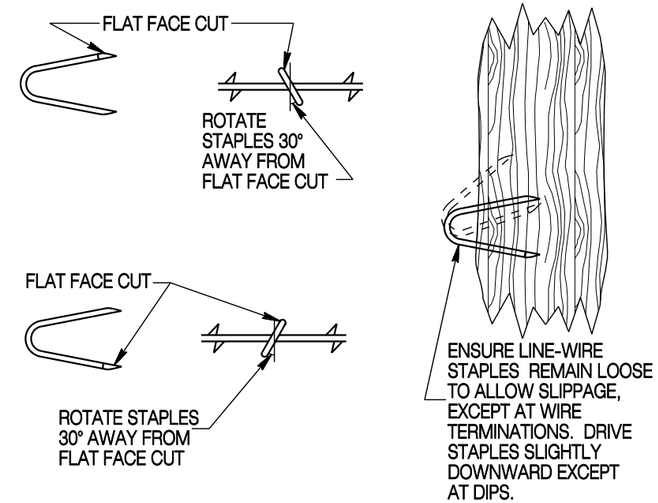

WIRE ATTACHMENT TO WOOD POSTS & WOOD STAYS (STAPLE DETAILS)

Attach wire to wood posts, wood stays and gate sticks with 2" x 9 gage [50 x 3.8 Dia.] galvanized barbed staples.

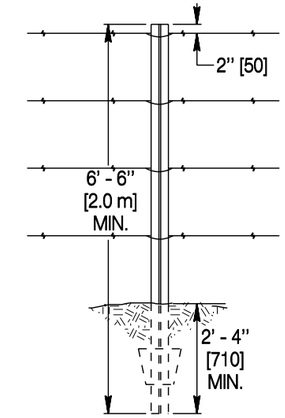

LINE POST DETAIL

STANDARD T-POST

1.33 LBS/FT [1.98 kg/m] WITH TIE WIRE NOTCHES & 0.67 LBS [0.30 kg] ANCHOR PLATE SECURELY ATTACHED

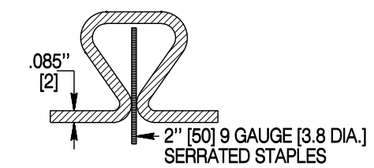

ALTERNATE LINE POST

STAPLE GRIPPER WITH SAND SPADE-1.27 lbs./ft. [1.89 kg/m]

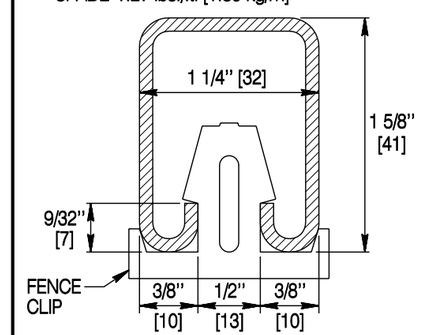

ALTERNATE LINE POST

HAMMERLOCK - 1.27 lbs/ft. [1.89 kg/m] W/O 0.67 LBS [0.30 kg] ANCHOR PLATE

METAL LINE POSTS

Designed by: WBW	WIRE SPACING AND LINE POST DETAILS
Drawn by: GLD	
Checked by: WBW	
Previous Dwg. No. 607-1	

Note: Units shown in brackets [ ] are metric and are in millimeters (mm) unless other units are shown.

WYOMING DEPARTMENT OF TRANSPORTATION

WIRE FENCE

STANDARD PLAN

STANDARD PLAN NUMBER 607-1A

SHEET 1 of 6

Issued by: ENGINEERING SERVICES

Date Issued: DECEMBER 2006

GENERAL NOTES

Place brace panels in tangent fence runs at locations designated by the engineer but no more than 1320 ft. [400 m] apart.

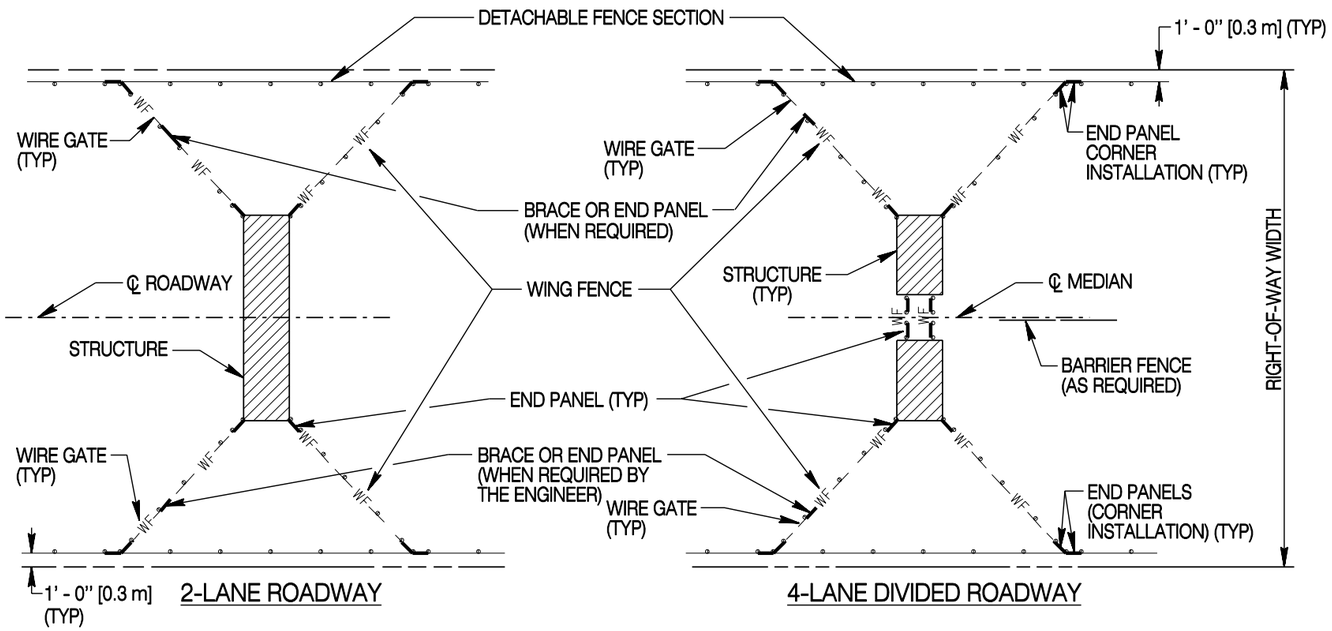

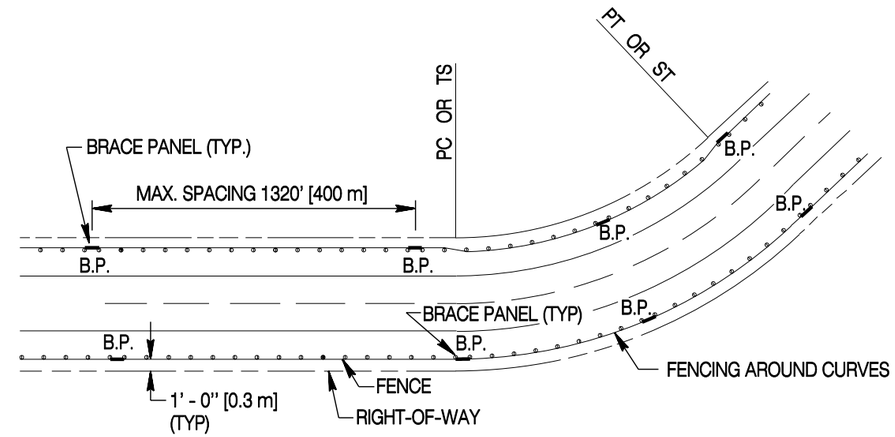

GENERAL FENCE REQUIREMENTS

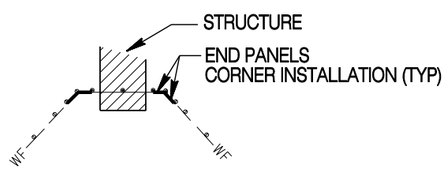

WING FENCE OVER TOP OF STRUCTURE

WING FENCE DETAILS

(FOR ALL 72" [1830] EQUIVALENT DIAMETER OR LARGER PIPE, BOX CULVERTS, BRIDGES AND OTHER LOCATIONS AS SPECIFIED IN THE PLANS)

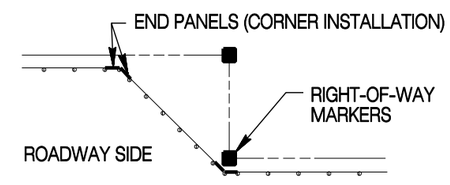

RIGHT-OF-WAY WIDTH CHANGE

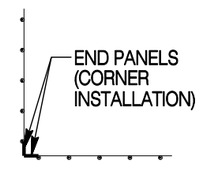

CORNER FENCE

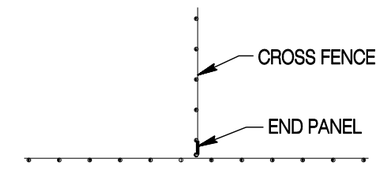

CROSS FENCE CONNECTION

Designed by: WBW Drawn by: GLD Checked by: WBW Previous Dwg. No. 607-1	GENERAL LAYOUT	WYOMING DEPARTMENT OF TRANSPORTATION	WIRE FENCE STANDARD PLAN
	Note: Units shown in brackets [ ] are metric and are in millimeters (mm) unless other units are shown.		STANDARD PLAN NUMBER 607-1A SHEET 2 of 6 Issued by: ENGINEERING SERVICES Date Issued: DECEMBER 2006

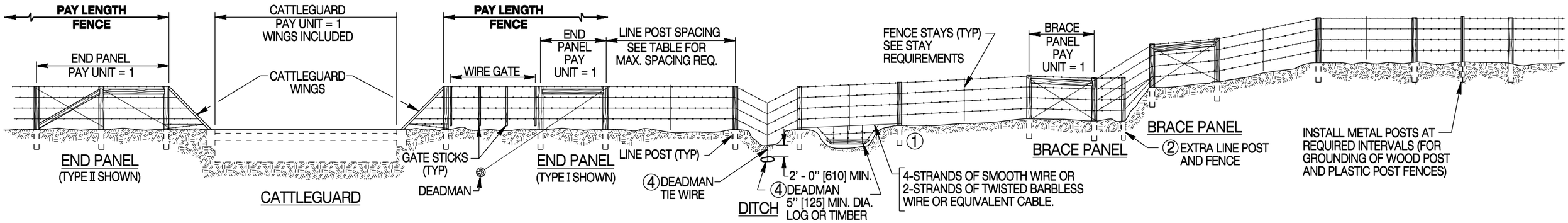

TYPICAL FENCE DETAILS

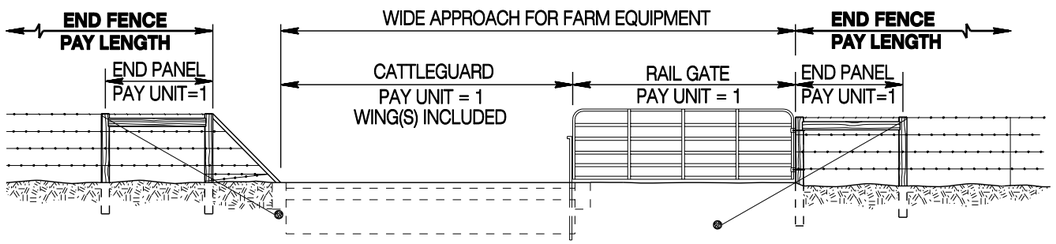

CATTLEGUARD USED IN CONJUNCTION WITH RAIL GATE

Use when shown in the plans or as directed by the engineer to provide a wide clear opening, approach for farm and ranch equipment

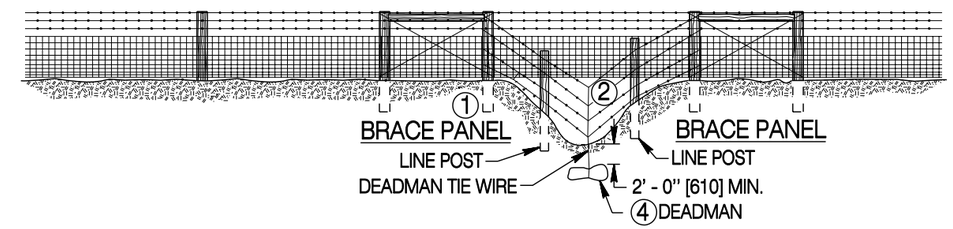

TYPICAL DITCH TREATMENT

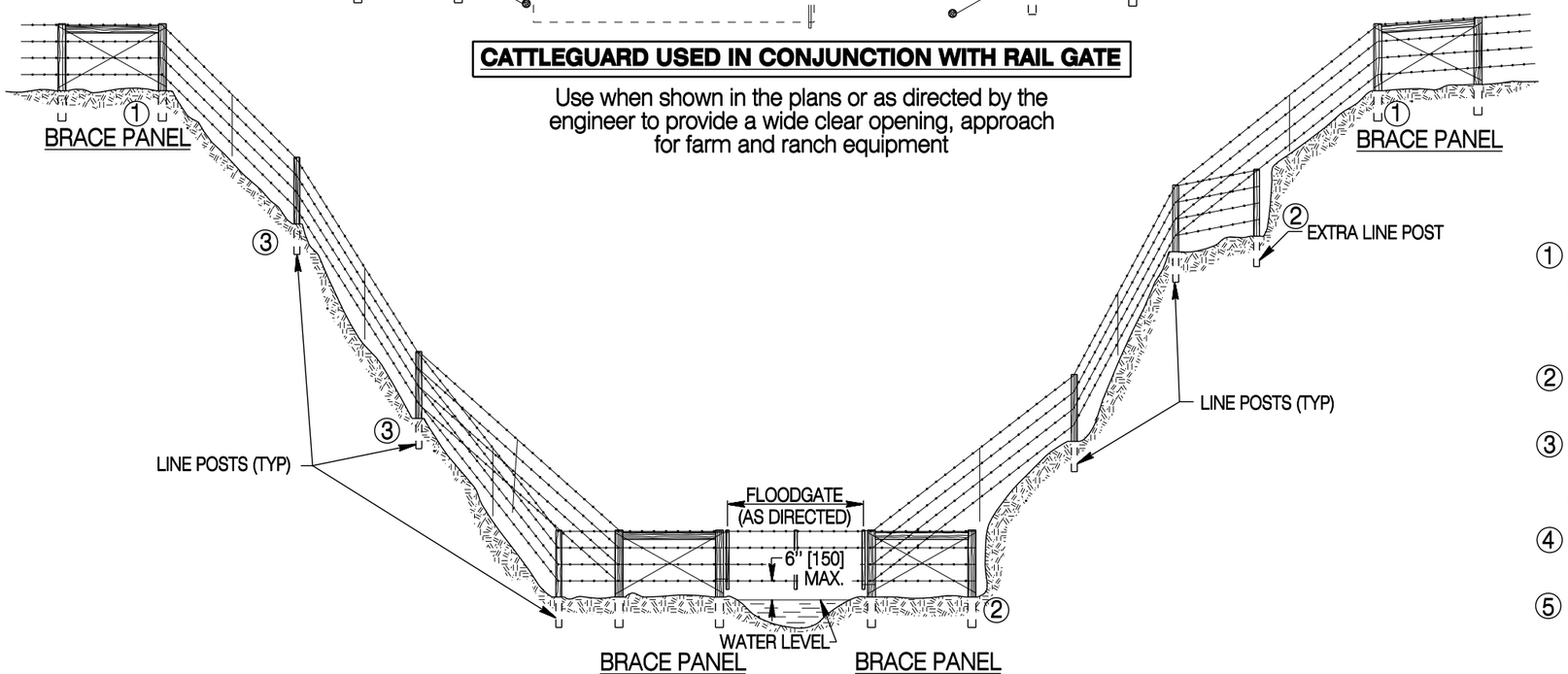

TYPICAL ROUGH TERRAIN AND FLOOD GATE TREATMENT

NOTES

① As the fence line approaches a depression, ditch or gulley, place the last post on level ground close enough to the drop-off edge to string wire to a post in the depression, ditch or gulley from both sides without touching the ground.

② Level uneven ground as much as possible. Otherwise place additional line fence and/or posts to compensate for terrain features.

③ Maintain required wire spacing of bottom wire with respect to the ground. Don't allow bottom wire to contact ground. If necessary, tie bottom wire to next wire to prevent ground contact.

④ Ensure deadman and deadman tie wire meet the requirements for End Panels Type I.

⑤ Details and notes on this sheet apply to all wire fencing.

Designed by: WBW Drawn by: GLD Checked by: WBW Previous Dwg. No. 607-1	TYPICAL FENCE CONSTRUCTION DETAILS	WYOMING DEPARTMENT OF TRANSPORTATION	WIRE FENCE STANDARD PLAN
Note: Units shown in brackets [ ] are metric and are in millimeters (mm) unless other units are shown.			STANDARD PLAN NUMBER 607-1A SHEET 3 of 6 Issued by: ENGINEERING SERVICES Date Issued: DECEMBER 2006

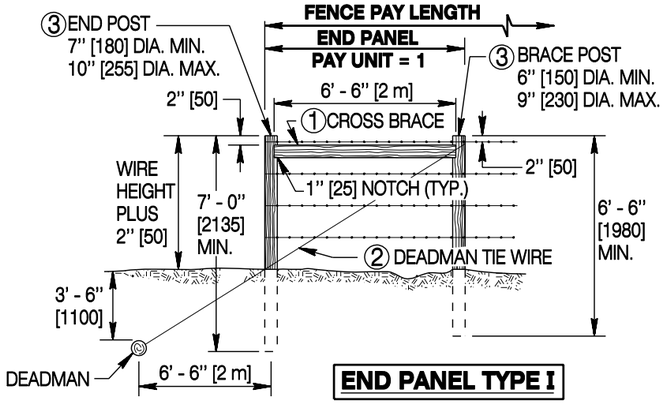

END PANEL TYPE I

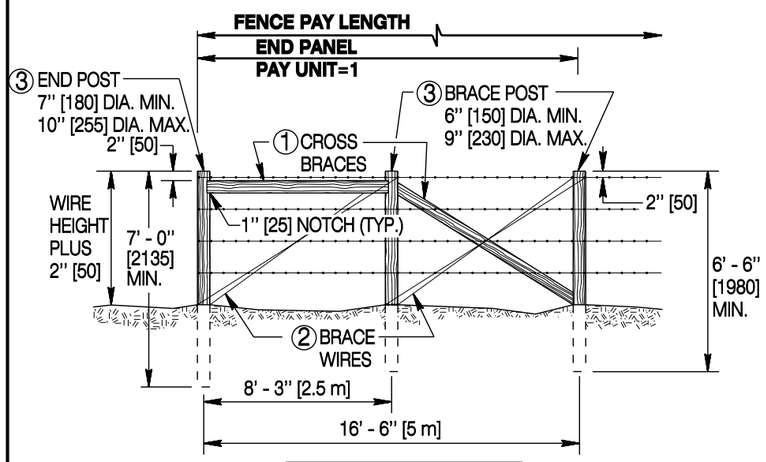

END PANEL TYPE II

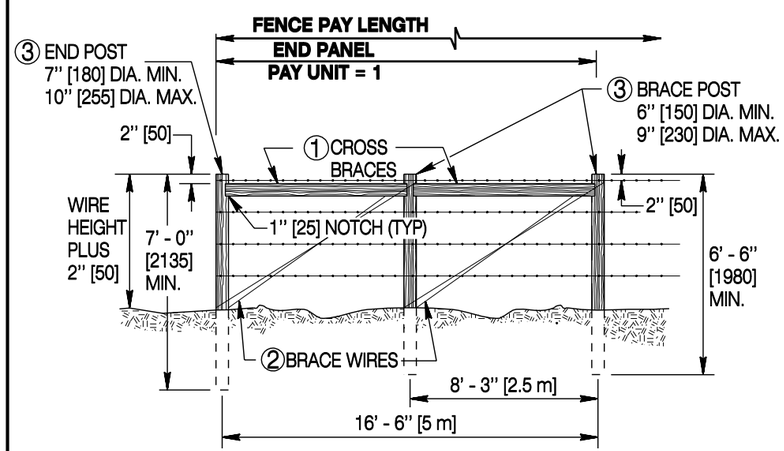

END PANEL TYPE III

NOTES

① CROSS BRACES

Provide wood cross braces that have a minimum diameter of 4 inches [100]. Install top of cross brace flush with top wire.

② BRACE AND DEADMAN TIE WIRES

Staple brace and tie wire with a minimum of three staples to each wood post and/or deadman. Twist tie wires together to form a tight composite brace and/or anchor wire.

③ BRACE AND END POSTS

Provide wood brace and end posts as shown.

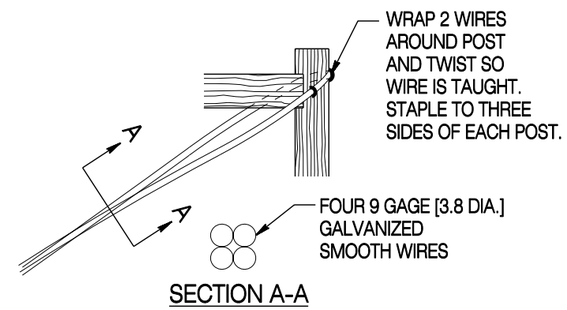

SECTION A-A

OPTION A

9 GAUGE [3.8 DIA.] WIRE

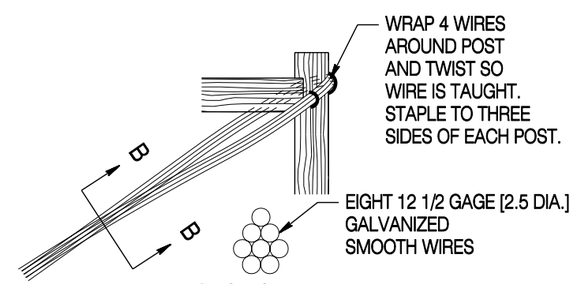

SECTION B-B

OPTION B

12 1/2 GAUGE [2.5 DIA.] WIRE

BRACE AND DEADMAN TIE WIRE DETAIL

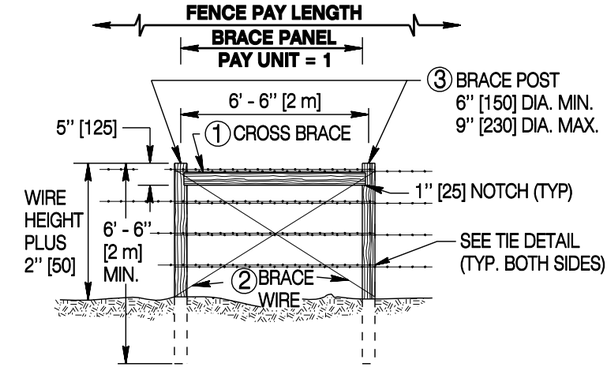

BRACE PANEL

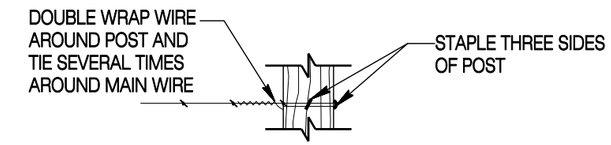

TERMINATING FENCE WIRE AT END & BRACE POSTS

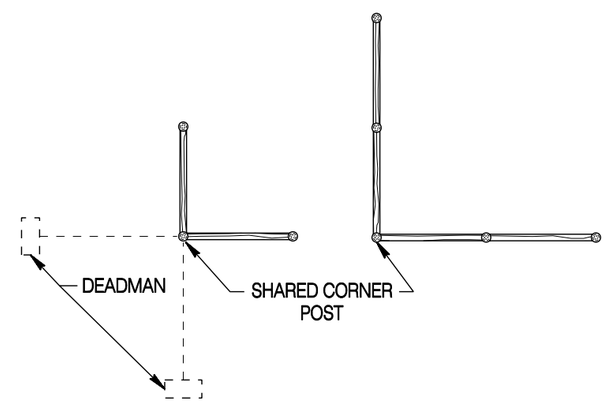

TYPE I

TYPE II OR III

PLAN VIEW

TYPICAL CORNER INSTALLATION - 2 END PANEL PAY UNITS

Designed by: WBW	END & BRACE PANEL DETAILS
Drawn by: GLD	
Checked by: WBW	
Previous Dwg. No. 607-1	

Note: Units shown in brackets [ ] are metric and are in millimeters (mm) unless other units are shown.

WYOMING DEPARTMENT OF TRANSPORTATION

WIRE FENCE

STANDARD PLAN

STANDARD PLAN NUMBER

607-1A

SHEET 4 of 6

Issued by: ENGINEERING SERVICES

Date Issued: DECEMBER 2006

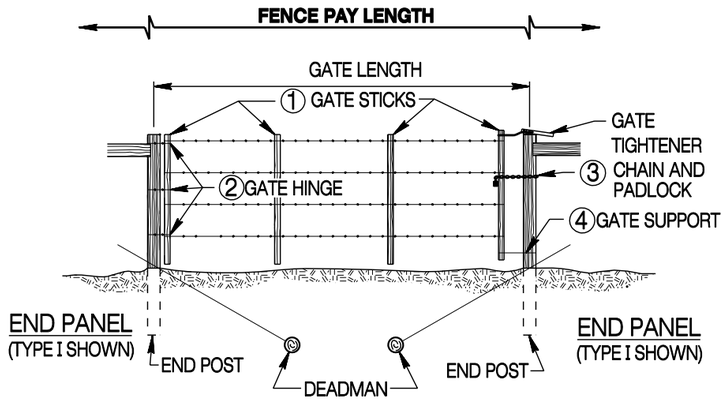

WIRE GATES

① **GATE STICK**

Provide wood gate sticks with a minimum cross section of either a rough dimension 2 in. x 2 in. [50 x 50], 1 1/2 in. x 3 1/2 in. [40 x 90] (nominal 2 in. x 4 in. [50 x 100]) or 2 1/2 in. [65] diameter. Extend the stick 1 inch [25] below the bottom strand of wire and 2 inches [50] above the top strand of wire.

② **GATE HINGE**

Staple to gate stick and to the end post. Use 3 per gate.

③ **GATE CHAIN**

Provide 3 foot [915] long galvanized chains where required with 1/4 inch [6] diameter welded links. Secure to end post by wiring or stapling.

④ **GATE SUPPORT**

Secure to the end post leaving a loop big enough to encompass a gate stick.

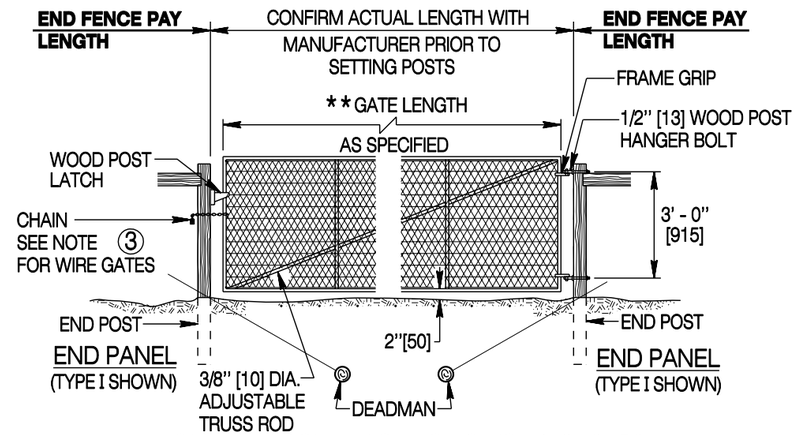

** SINGLE SWING GATE LENGTH NOT TO EXCEED 16' - 0" [5.0 m]
NOMINAL GATE LENGTHS ARE 8' [2.4 m],10' [3.0 m],12' [3.6 m], 14' [4.3 m] AND 16' [5.0 m].

GALVANIZED STEEL GATE

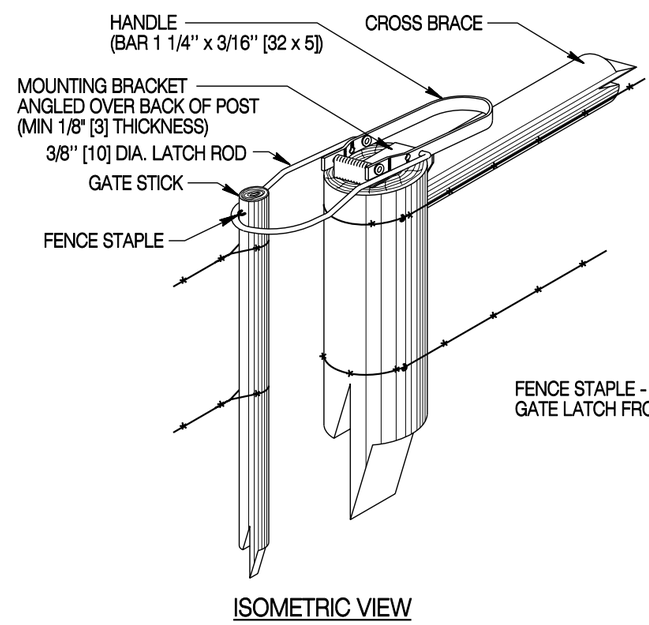

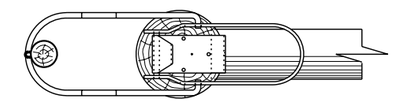

TOP VIEW

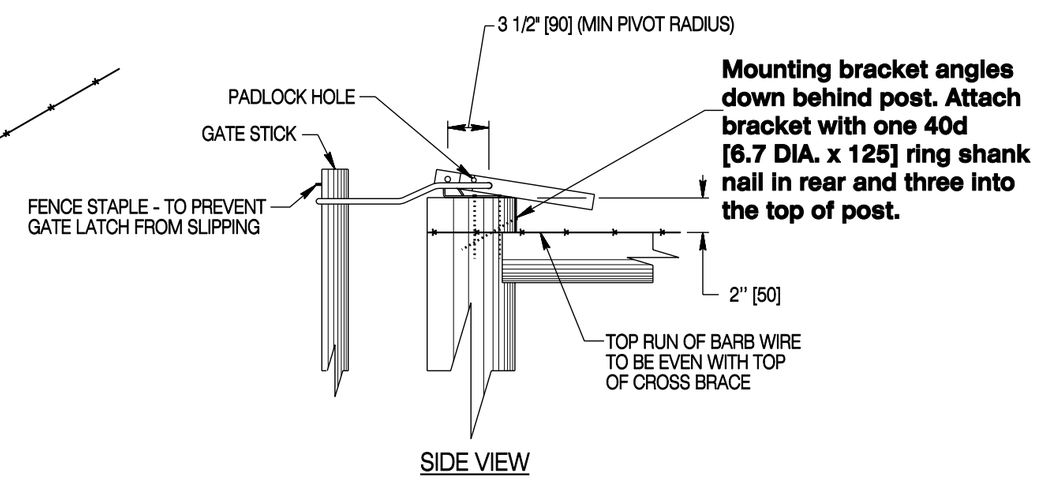

Mounting bracket angles down behind post. Attach bracket with one 40d [6.7 DIA. x 125] ring shank nail in rear and three into the top of post.

TYPICAL GATE TIGHTENER

Shop paint gate tighteners. Use alternate tighteners only when approved by the engineer. It will be the sole discretion of the engineer in determining whether alternate gate tighteners are of equivalent strength, functionality and durability.

Designed by: WBW	
Drawn by: GLD	
Checked by: WBW	
Previous Dwg. No. 607-1	

WIRE GATES AND
GALVANIZED STEEL GATES

Note: Units shown in brackets [ ] are metric and are in millimeters (mm) unless other units are shown.

WYOMING DEPARTMENT OF TRANSPORTATION

WIRE FENCE

STANDARD PLAN

STANDARD PLAN NUMBER
607-1A
SHEET 5 of 6
Issued by: ENGINEERING SERVICES
Date Issued: DECEMBER 2006

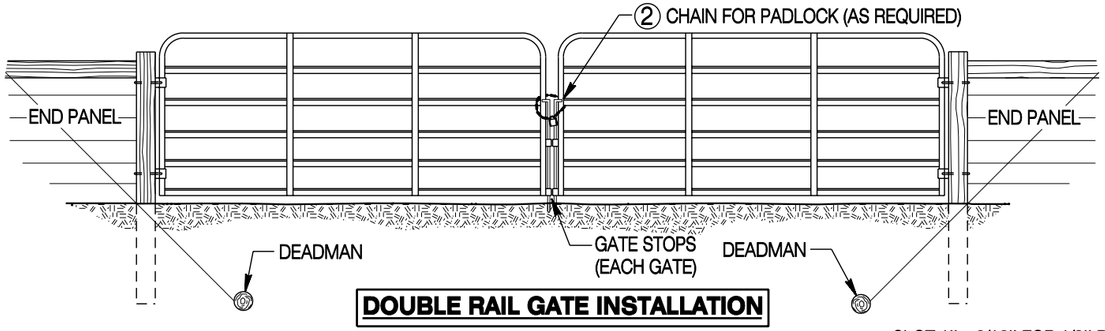

DOUBLE RAIL GATE INSTALLATION

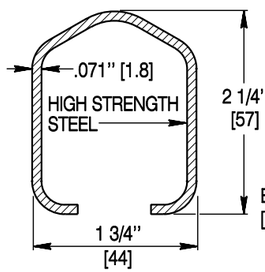

TYPICAL HORIZONTAL RAIL
(SECTION A-A)

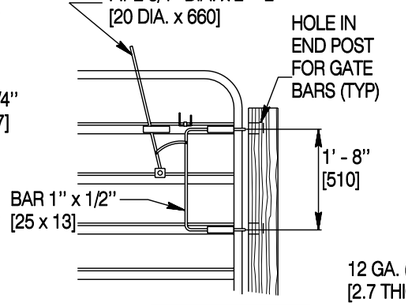

GATE LATCH

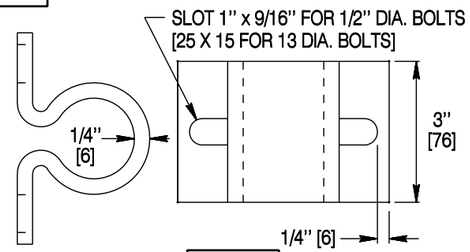

HINGE

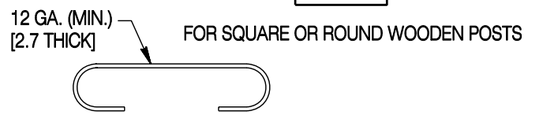

VERTICAL STAY
(SECTION B-B)

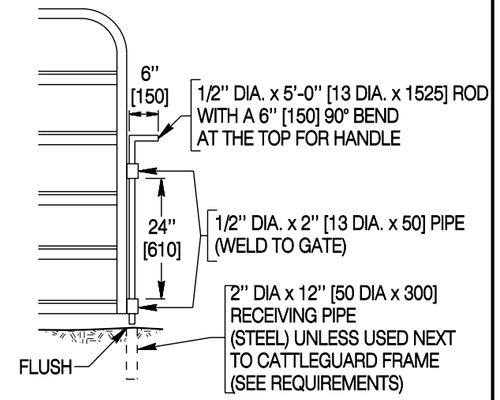

GATE STOP
(USE WITH BOTH GATES IN DOUBLE INSTALLATION AND FOR SINGLE GATE USED IN CONJUNCTION WITH CATTLEGUARD)

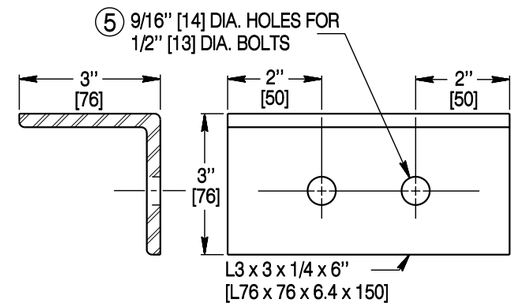

SUPPORT ANGLE

RAIL GATE NOTES

① **POST EMBEDMENT**
In lieu of anchoring end posts in concrete, embed a minimum of 4 ft. [1220] deep.

② **GATE CHAIN**
When required provide 3 ft. [915] long, galvanized chains with 1/4" [6] diameter welded links. Secure to the end post by wiring or stapling.

③ **RAIL GATES**
Alternate gates with horizontal rail, frame tubing and vertical stay sections may be used as approved by the engineer.

④ **HINGE BOLTS**
Use two 1/2 in [13] dia. bolts with nuts and washers for each hinge; bolt length to be determined by the size and type of post used.

⑤ **SUPPORT ANGLE AND BOLTS**
Use two 1/2 in. [13] dia. bolts with nuts and washers for attaching each support angle to the posts.

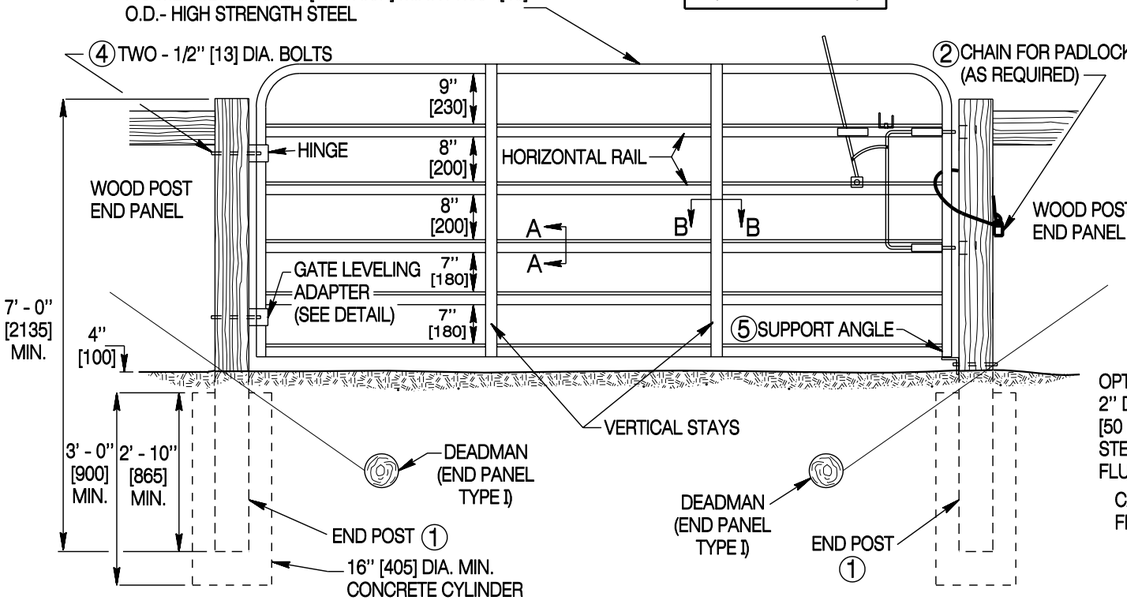

TYPICAL SINGLE RAIL GATE INSTALLATION

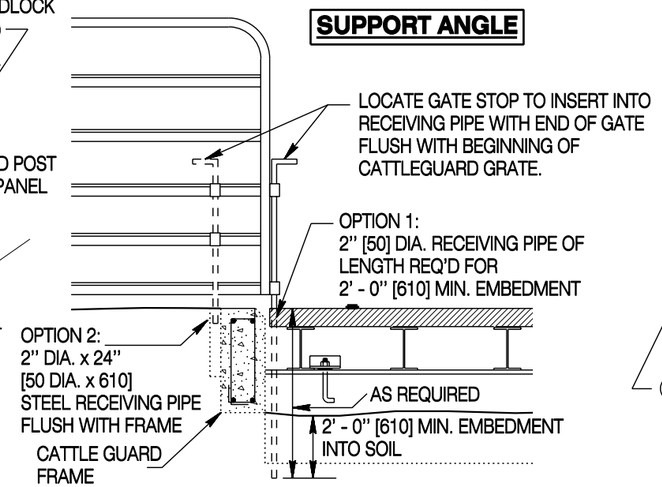

SINGLE RAIL GATE INSTALLATION USED IN CONJUNCTION WITH CATTLEGUARD

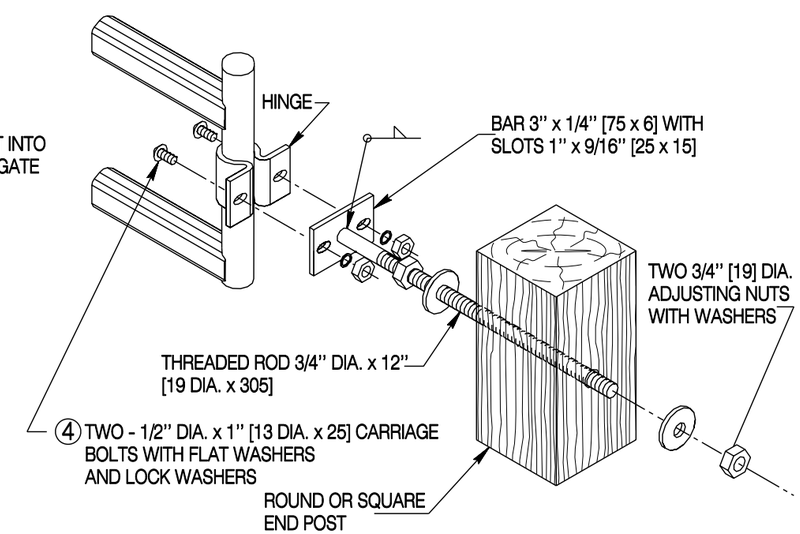

GATE LEVELING ADAPTOR

Designed by: WBW	
Drawn by: GLD	
Checked by: WBW	
Previous Dwg. No. 607-1	

RAIL GATE DETAILS

Note: Units shown in brackets [ ] are metric and are in millimeters (mm) unless other units are shown.

WYOMING DEPARTMENT OF TRANSPORTATION

WIRE FENCE

STANDARD PLAN

STANDARD PLAN NUMBER
607-1A
SHEET 6 of 6
Issued by: ENGINEERING SERVICES
Date Issued: DECEMBER 2006

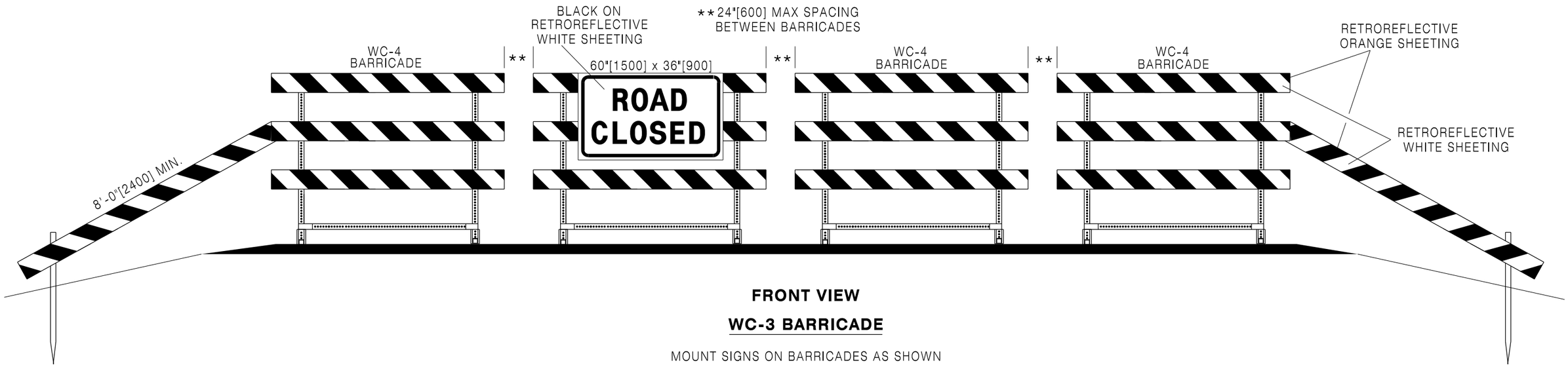

FRONT VIEW

WC-3 BARRICADE

MOUNT SIGNS ON BARRICADES AS SHOWN

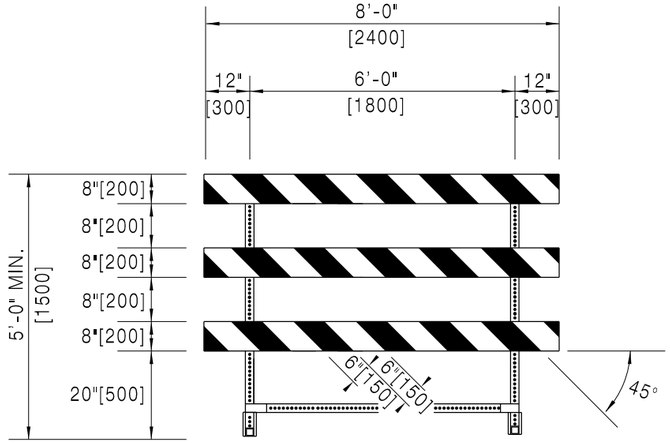

FRONT VIEW

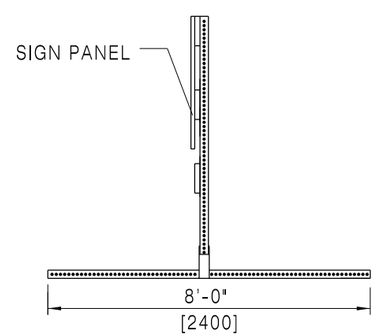

SIDE VIEW

WC-4 BARRICADE

NOTES:

1. Submit support design modifications to the engineer for approval.
2. Slope stripes on WC-3 and WC-4 barricades downward towards the travel way or in the direction which traffic moves when moving by the barricade.

Designed by: TRAFFIC	WC-3 AND WC-4 BARRICADES
Drawn by: JTG	
Checked by: TRAFFIC	
Previous Dwg. No. 703-1D	

Note: Units shown in brackets [ ] are metric and are in millimeters (mm) unless other units are shown.

WYOMING DEPARTMENT OF TRANSPORTATION

CONSTRUCTION TRAFFIC CONTROL DEVICES

STANDARD PLAN

STANDARD PLAN NUMBER

703-1E

SHEET 1 of 12

Issued by: TRAFFIC PROGRAM

Date Issued: July, 2012

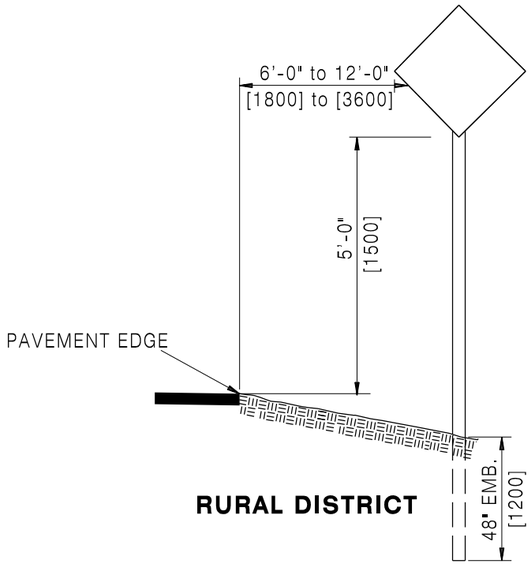

RURAL DISTRICT

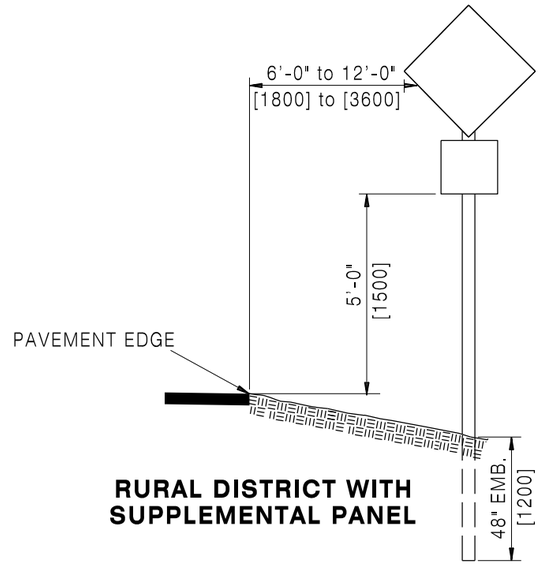

RURAL DISTRICT WITH SUPPLEMENTAL PANEL

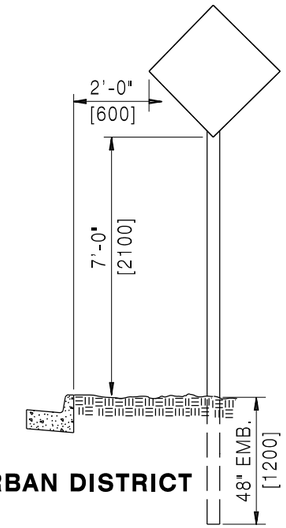

URBAN DISTRICT

SIGN PLACEMENT

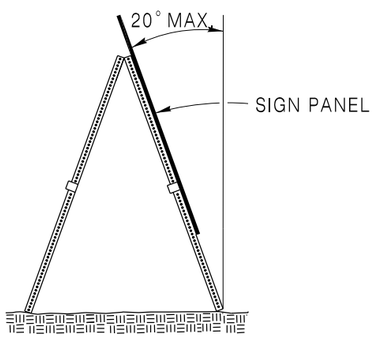

SIDE VIEW

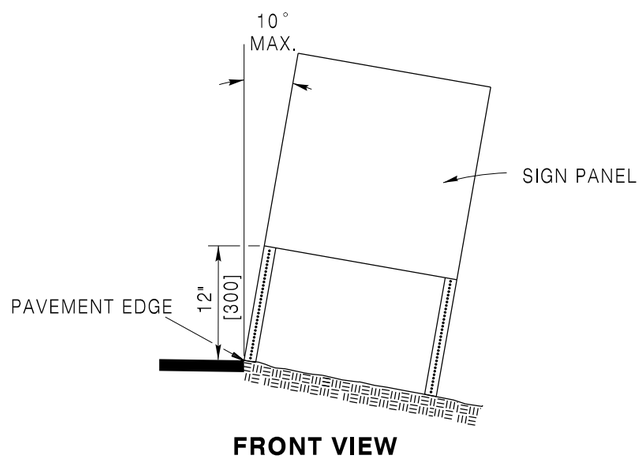

FRONT VIEW

PORTABLE SIGN SUPPORT ORIENTATION

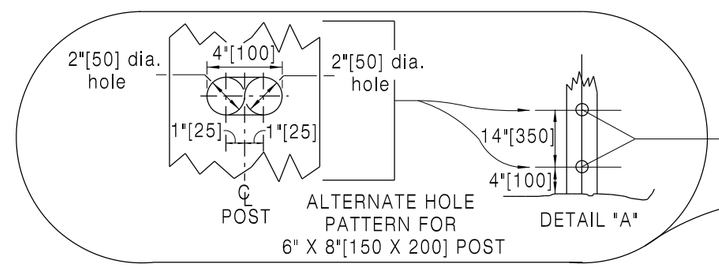

POST SIZE	HOLE DIA.
4" x 4"[100 X 100]	1"[25] Φ
4" x 6"[100 X 150]	2"[50] Φ
6" x 6"[150 X 150]	2 1/2"[64] Φ
6" x 8"[150 X 200]	4"[100] Φ

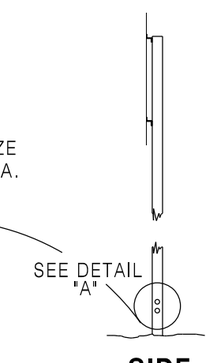

SIDE

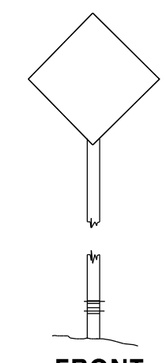

FRONT

BREAK-AWAY TIMBER POST DETAIL

Designed by: TRAFFIC	MISCELLANEOUS SIGNING DETAILS
Drawn by: JTG	
Checked by: TRAFFIC	
Previous Dwg. No. 703-1D	

Note: Units shown in brackets [ ] are metric and are in millimeters (mm) unless other units are shown.

WYOMING DEPARTMENT OF TRANSPORTATION

CONSTRUCTION TRAFFIC CONTROL DEVICES

STANDARD PLAN

STANDARD PLAN NUMBER

703-1E

SHEET 2 of 12

Issued by: TRAFFIC PROGRAM

Date Issued: July, 2012

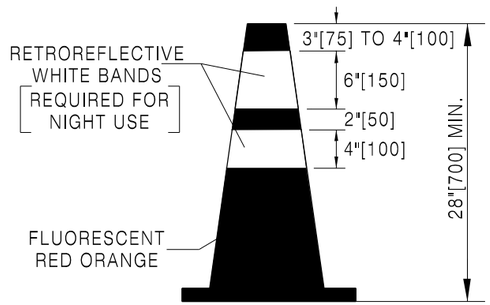

CONE

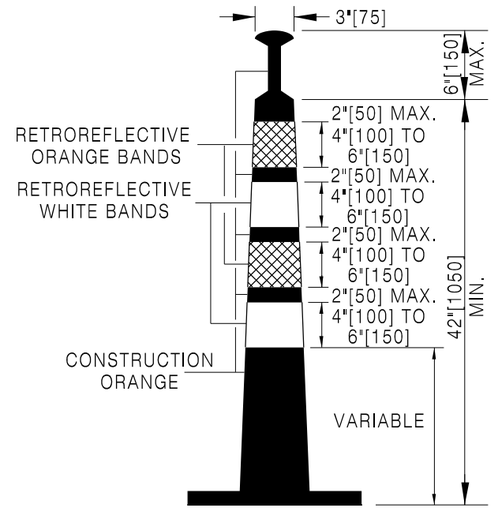

42"[1050] CONE

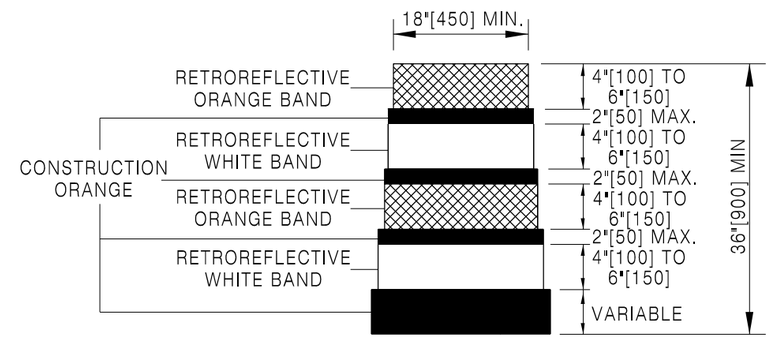

DRUM

CHANNELIZING DEVICES

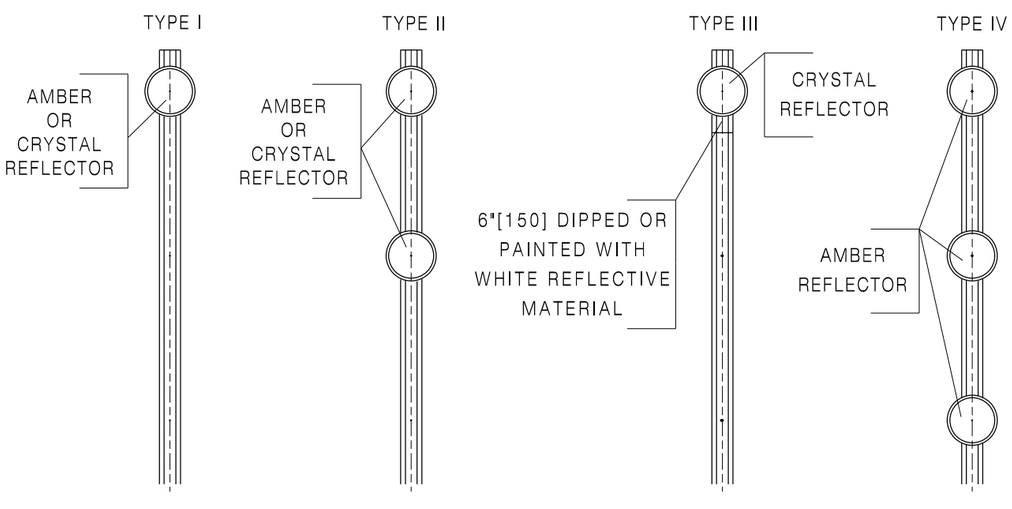

DELINEATORS

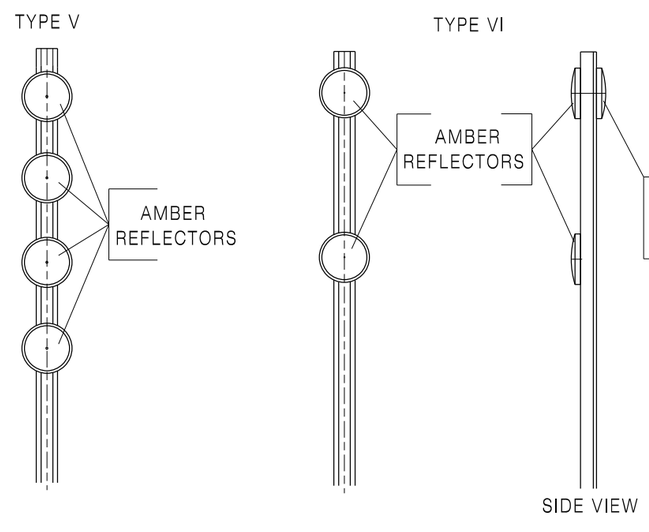

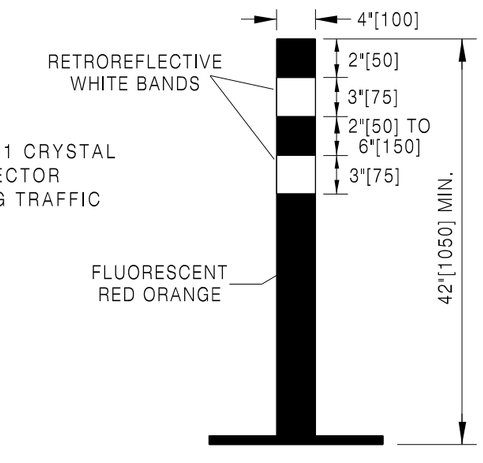

TUBULAR MARKER

DELINEATING DEVICES

Designed by: TRAFFIC	CHANNELIZING AND DELINEATING DEVICES
Drawn by: JTG	
Checked by: TRAFFIC	
Previous Dwg. No. 703-1D	

Note: Units shown in brackets [ ] are metric and are in millimeters (mm) unless other units are shown.

WYOMING DEPARTMENT OF TRANSPORTATION

CONSTRUCTION TRAFFIC CONTROL DEVICES

STANDARD PLAN

STANDARD PLAN NUMBER

703-1E

SHEET 3 of 12

Issued by: TRAFFIC PROGRAM

Date Issued: July, 2012

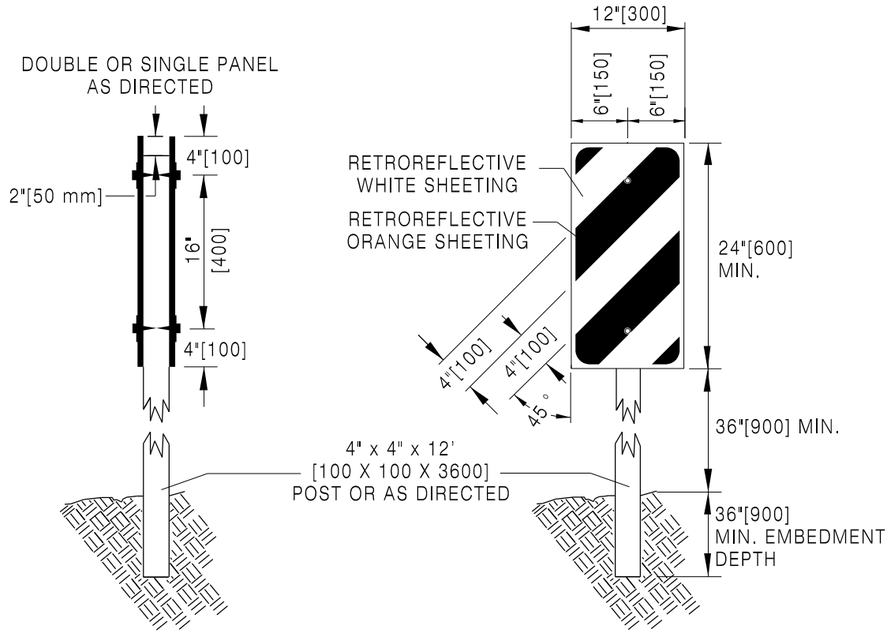

VERTICAL PANELS

Mount vertical panels on wood posts using 1/4 in.[6] X 2 1/2 in.[64] galvanized lag screws and flat washers.

Slope stripes on vertical panels downward towards the travel way or in the direction which traffic moves when moving by the marker.

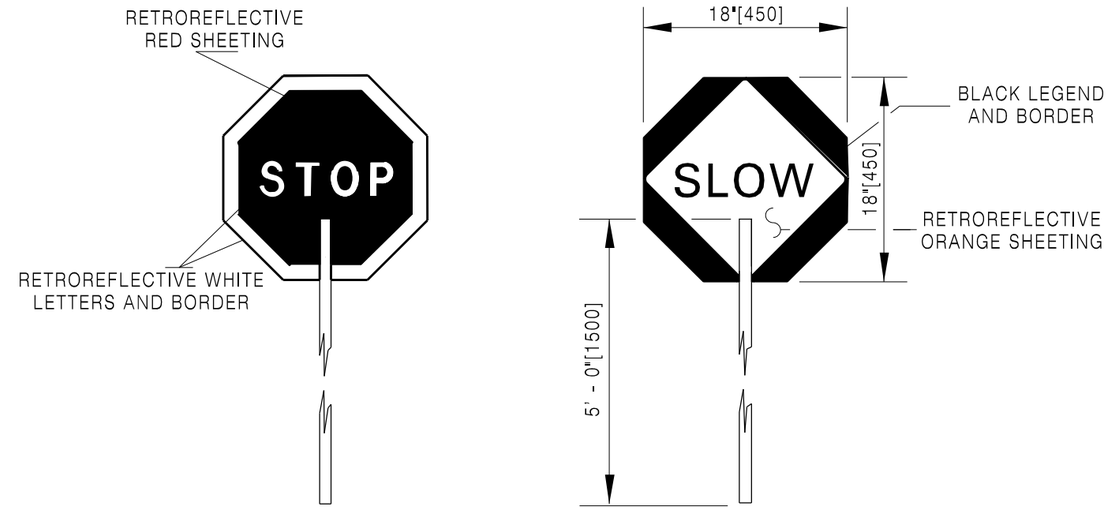

STOP-SLOW PADDLE

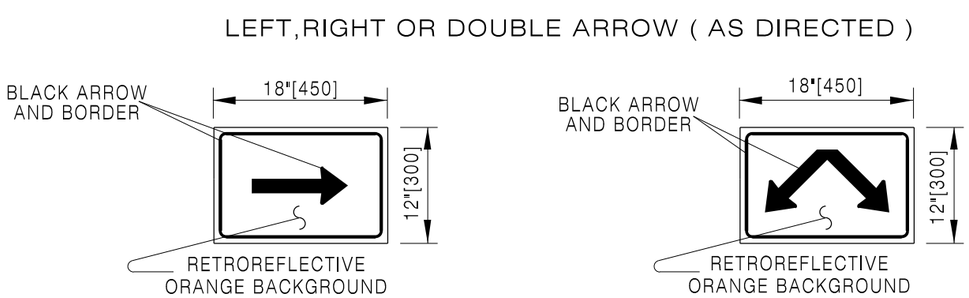

DIRECTIONAL ARROWS

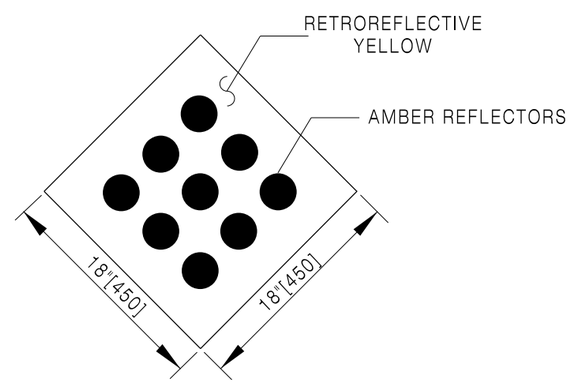

TYPE 1

OBJECT MARKER

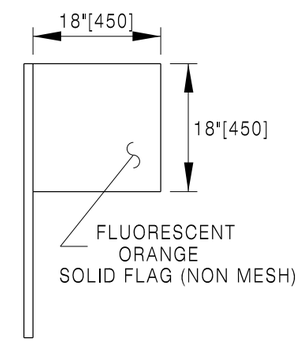

SIGN FLAG DETAIL

Designed by: TRAFFIC Drawn by: JTG Checked by: TRAFFIC Previous Dwg. No. 703-1D	MISCELLANEOUS SIGNING DETAILS	WYOMING DEPARTMENT OF TRANSPORTATION	CONSTRUCTION TRAFFIC CONTROL DEVICES STANDARD PLAN	STANDARD PLAN NUMBER **703-1E** SHEET 4 of 12 Issued by: TRAFFIC PROGRAM Date Issued: July, 2012

Note: Units shown in brackets [ ] are metric and are in millimeters (mm) unless other units are shown.

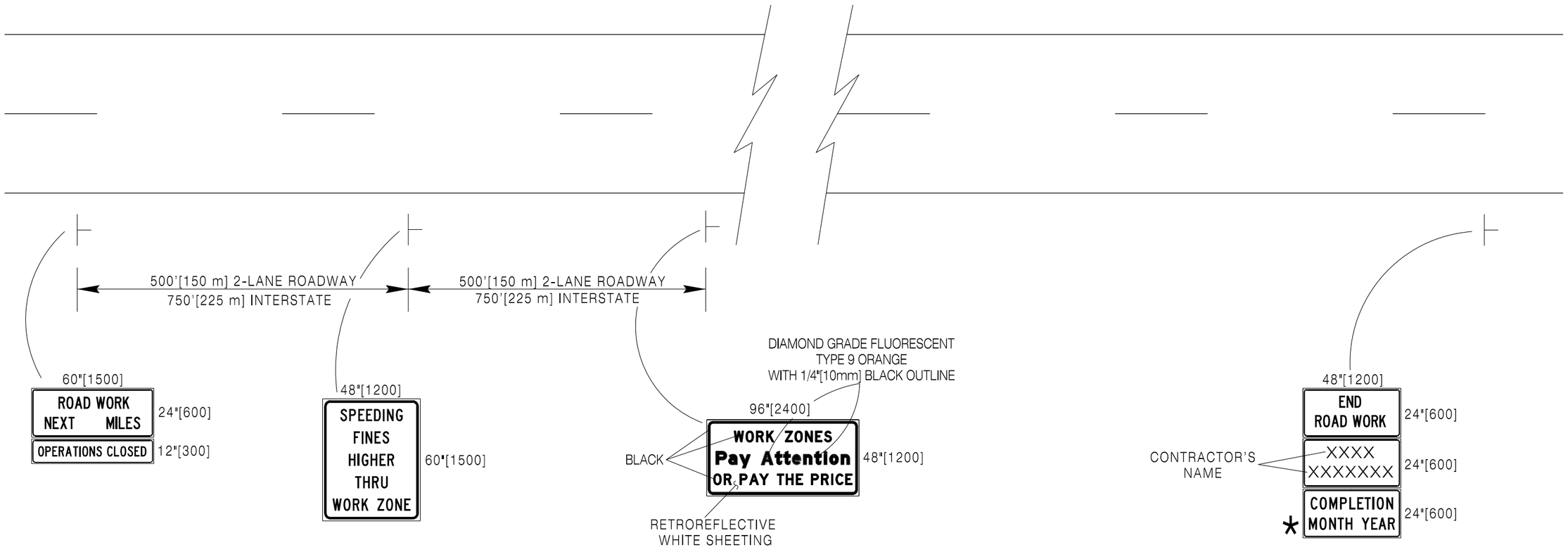

NOTES:

Do not obstruct or detract from the effectiveness of standard construction or permanent signs with these signs. Place signs **500'[150 m] or 750'[225 m]** in advance of any construction or permanent signing. Do not substitute these signs for construction warning or regulatory signs.

Use "OPERATIONS CLOSED" sign as directed by the engineer, when construction ceases for the winter or other periods of suspension.

* THIS SIGN SIGNIFIES THE DATE THE PROJECT IS TO BE COMPLETED. THE TRAFFIC PROGRAM OF WYDOT FURNISHES, UPON REQUEST OF THE CONTRACTOR, SIGN FABRICATION LAYOUT SHEETS.

Designed by: TRAFFIC Drawn by: JTG Checked by: TRAFFIC Previous Dwg. No. 703-1D	BEGINNING AND ENDING CONSTRUCTION ZONE SIGNING	WYOMING DEPARTMENT OF TRANSPORTATION	**CONSTRUCTION TRAFFIC CONTROL DEVICES** STANDARD PLAN	STANDARD PLAN NUMBER **703-1E** SHEET 5 of 12 Issued by: TRAFFIC PROGRAM Date Issued: July, 2012

Note: Units shown in brackets [ ] are metric and are in millimeters (mm) unless other units are shown.

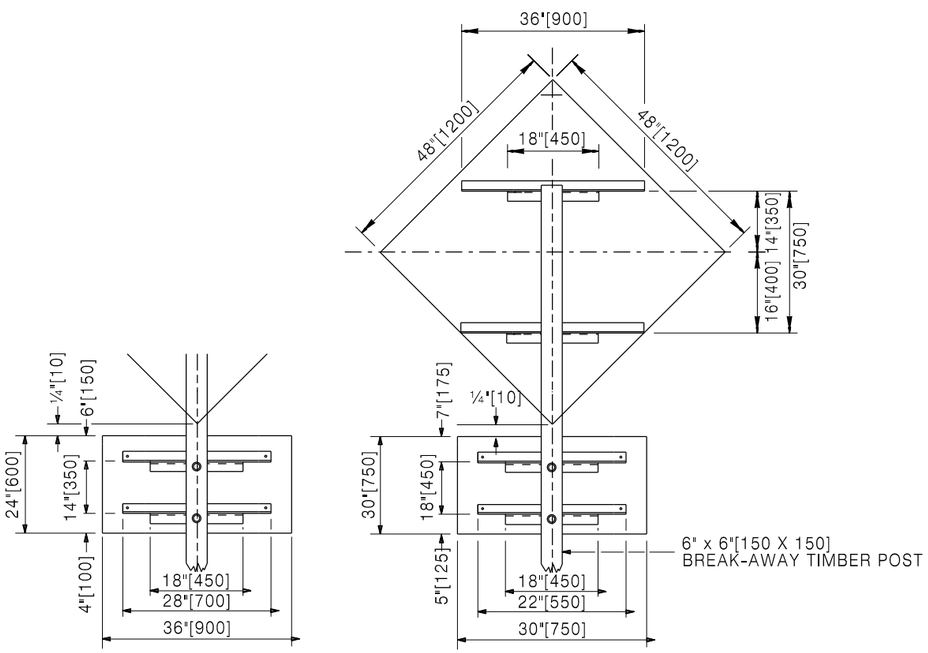

S-1 AND S-1A

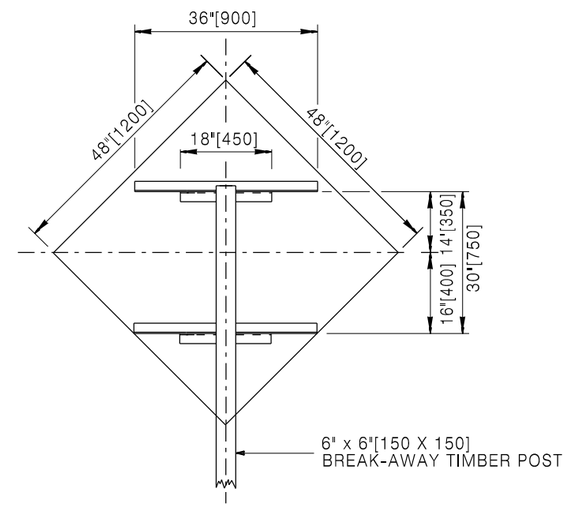

S-2 AND S-2A

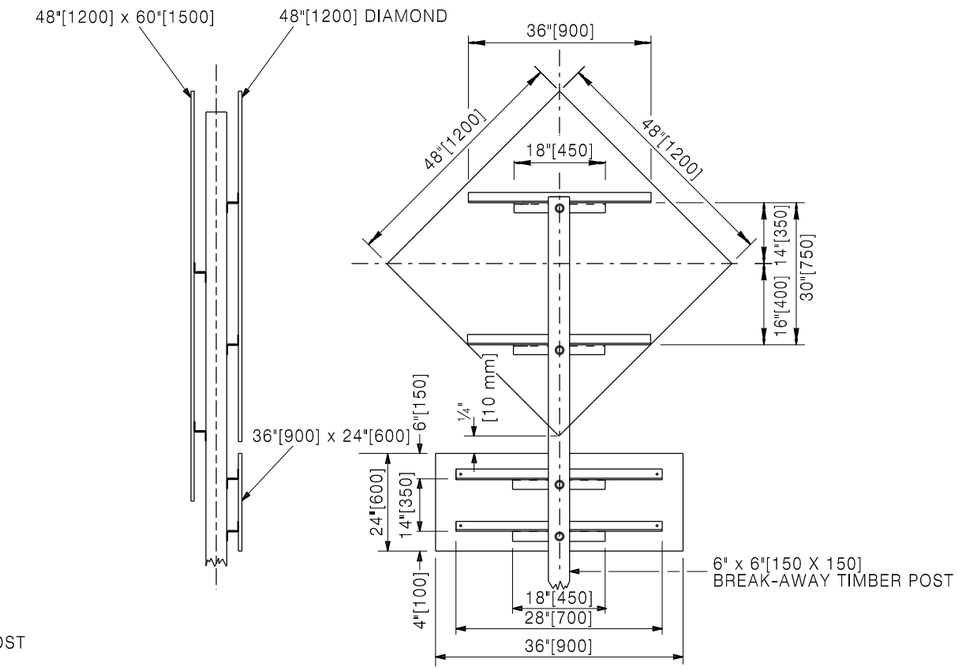

S-3

NOTE:
BACKING ANGLES ARE NOT REQUIRED FOR ONE PIECE 0.125 ALUMINUM SIGN PANELS 48" X 60" OR SMALLER.

Designed by: TRAFFIC Drawn by: JTG Checked by: TRAFFIC Previous Dwg. No. 703-1D	SIGN STRUCTURE DETAILS	WYOMING DEPARTMENT OF TRANSPORTATION	**CONSTRUCTION TRAFFIC CONTROL DEVICES** STANDARD PLAN	STANDARD PLAN NUMBER **703-1E** SHEET 6 of 12 Issued by: TRAFFIC PROGRAM Date Issued: July, 2012

Note: Units shown in brackets [ ] are metric and are in millimeters (mm) unless other units are shown.

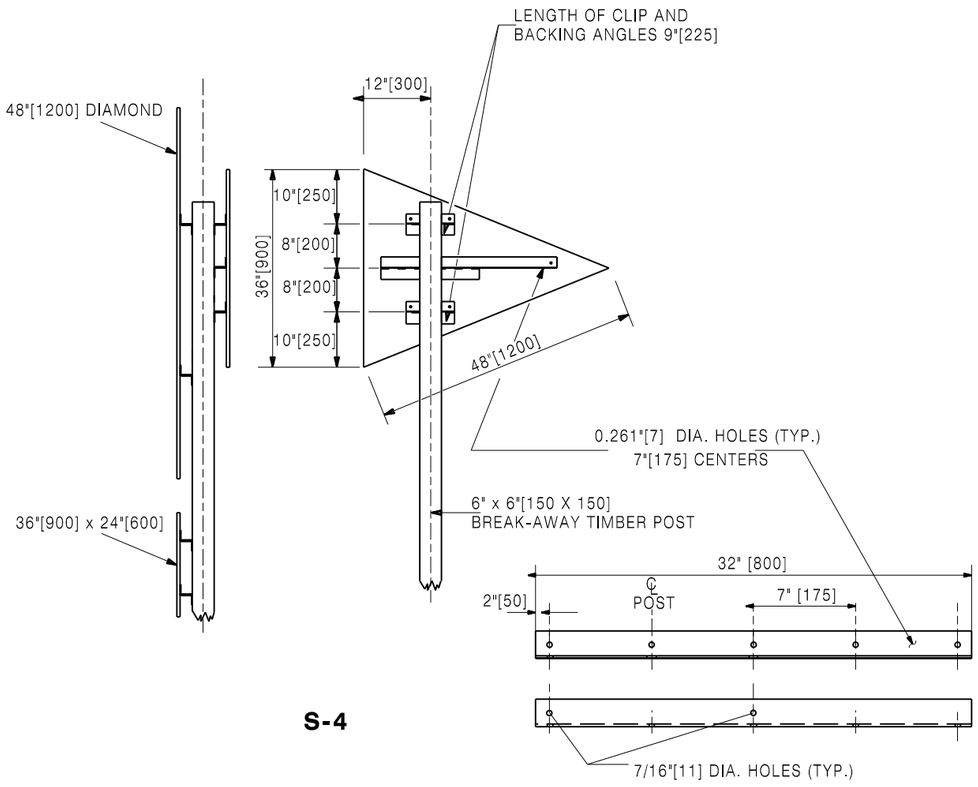

BACKING ANGLE DETAIL

2" x 2" x 3/16"
[51 X 51 X 4.8]

S-4

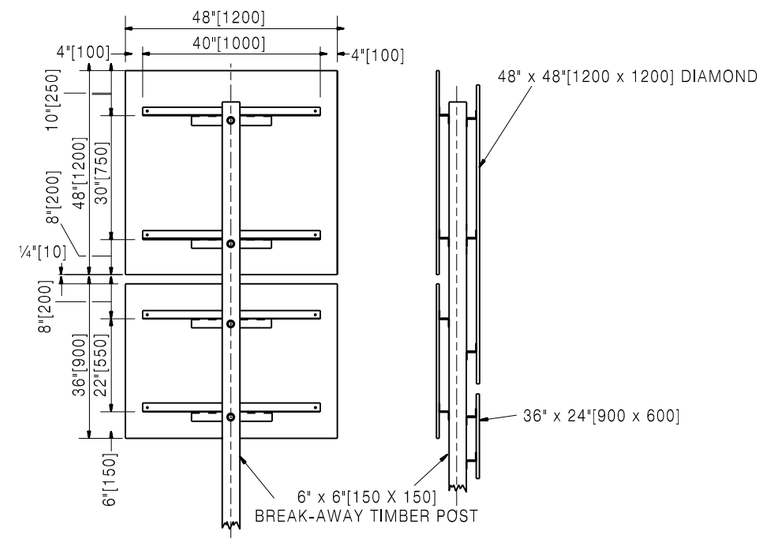

S-5

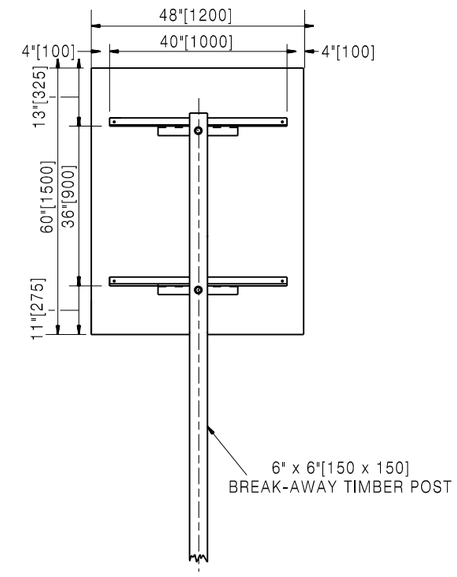

S-6

NOTE:
BACKING ANGLES ARE NOT REQUIRED FOR ONE PIECE 0.125 ALUMINUM SIGN PANELS 48" X 60" OR SMALLER.

Designed by: TRAFFIC Drawn by: JTG Checked by: TRAFFIC Previous Dwg. No. 703-1D	SIGN STRUCTURE DETAILS	WYOMING DEPARTMENT OF TRANSPORTATION	CONSTRUCTION TRAFFIC CONTROL DEVICES STANDARD PLAN
Note: Units shown in brackets [ ] are metric and are in millimeters (mm) unless other units are shown.			STANDARD PLAN NUMBER 703-1E SHEET 7 of 12 Issued by: TRAFFIC PROGRAM Date Issued: July, 2012

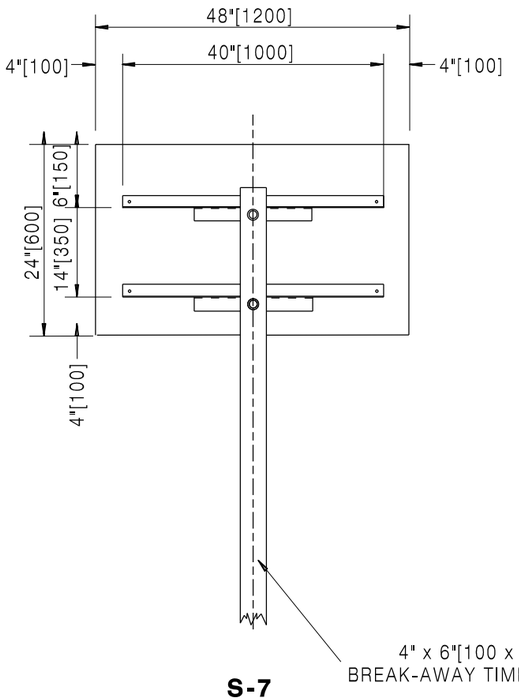

S-7

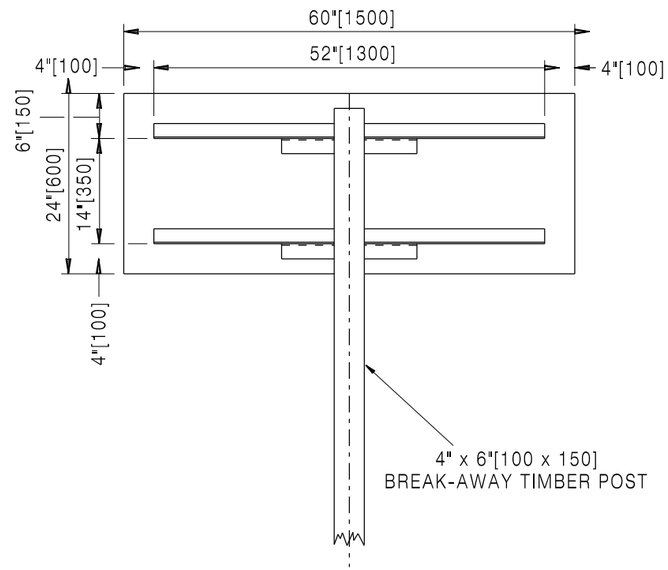

S-10

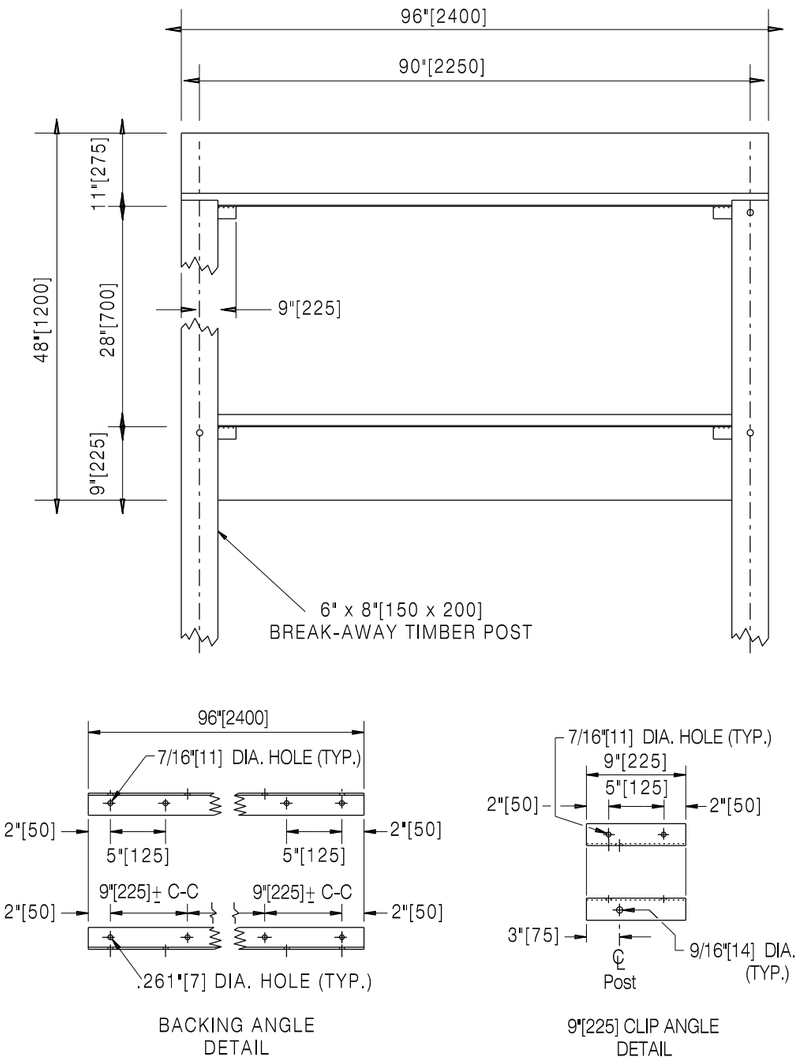

S-11

NOTE:
BACKING ANGLES ARE NOT REQUIRED FOR ONE PIECE 0.125 ALUMINUM SIGN PANELS 48" X 60" OR SMALLER.

Designed by: TRAFFIC Drawn by: JTG Checked by: TRAFFIC Previous Dwg. No. 703-1D	SIGN STRUCTURE DETAILS	WYOMING DEPARTMENT OF TRANSPORTATION	**CONSTRUCTION TRAFFIC CONTROL DEVICES** STANDARD PLAN	STANDARD PLAN NUMBER **703-1E** SHEET 8 of 12 Issued by: TRAFFIC PROGRAM Date Issued: July, 2012

Note: Units shown in brackets [ ] are metric and are in millimeters (mm) unless other units are shown.

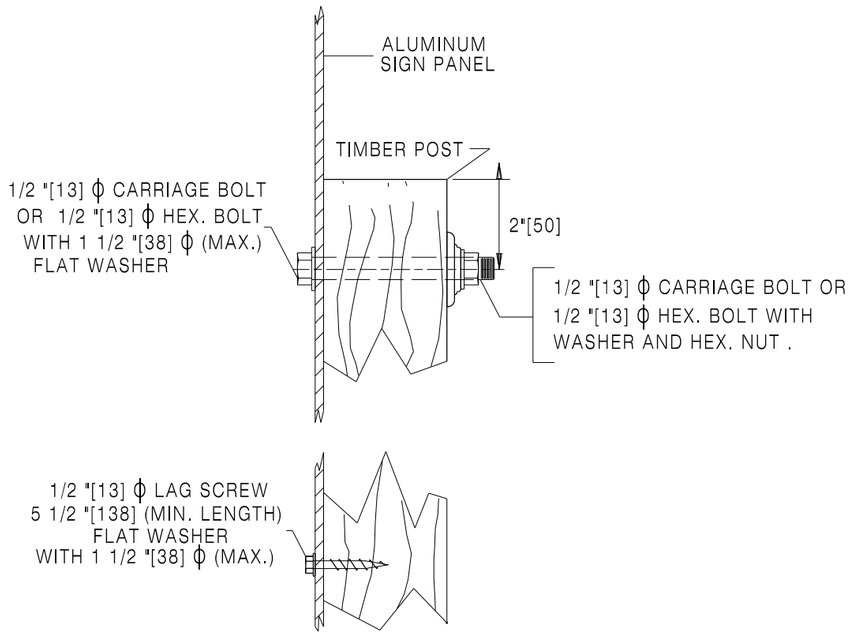

PANEL MOUNTING
SIDE VIEW ALUMINUM
WITHOUT BACKING ANGLES

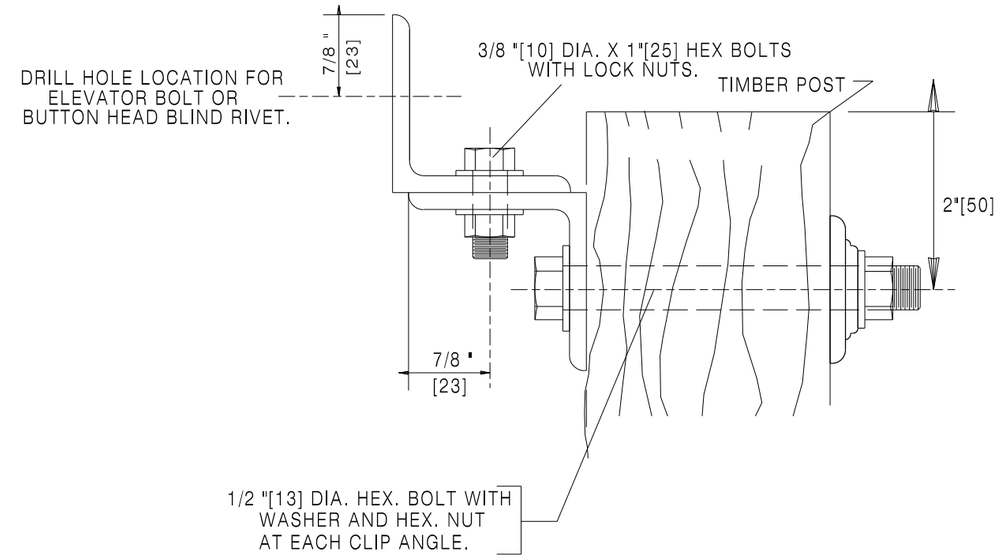

BACKING ANGLE AND CLIP ANGLE
MOUNTING DETAIL

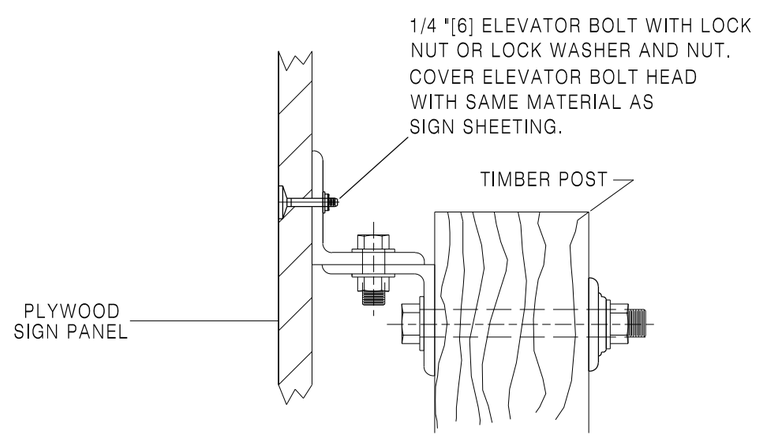

PANEL MOUNTING
SIDE VIEW PLYWOOD

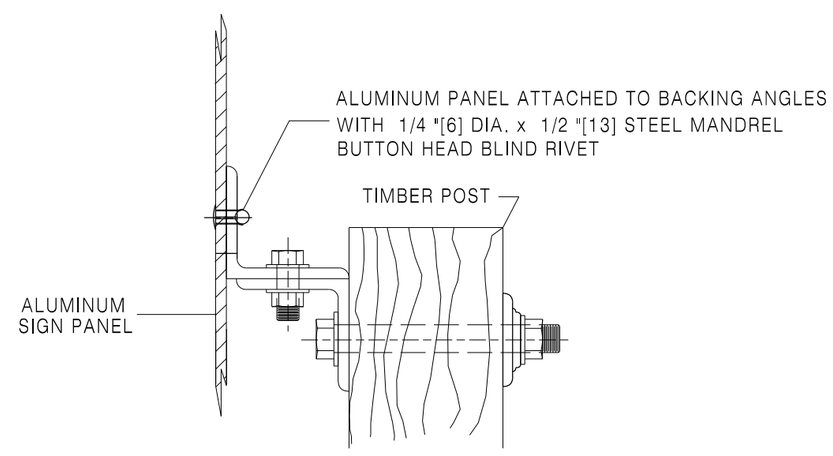

PANEL MOUNTING
SIDE VIEW ALUMINUM

Designed by: TRAFFIC Drawn by: JTG Checked by: TRAFFIC Previous Dwg. No. 703-1D	SIGN STRUCTURE DETAILS	WYOMING DEPARTMENT OF TRANSPORTATION	**CONSTRUCTION TRAFFIC CONTROL DEVICES** STANDARD PLAN
	Note: Units shown in brackets [ ] are metric and are in millimeters (mm) unless other units are shown.		

STANDARD PLAN NUMBER
703-1E
SHEET 9 of 12
Issued by: TRAFFIC PROGRAM
Date Issued: July, 2012

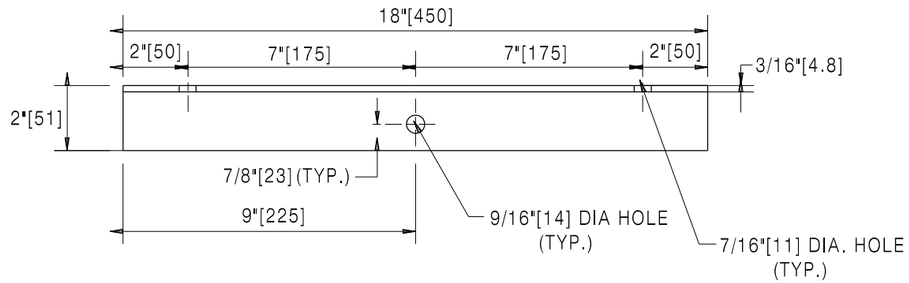

CLIP ANGLE

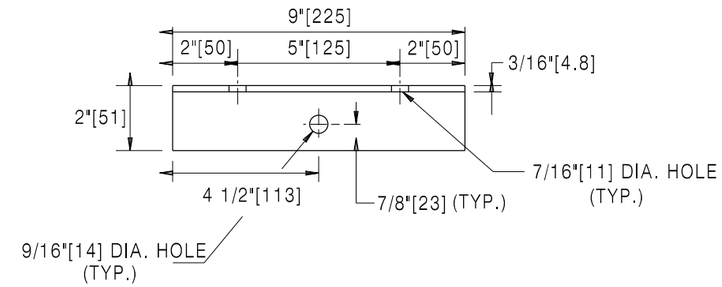

CLIP ANGLE

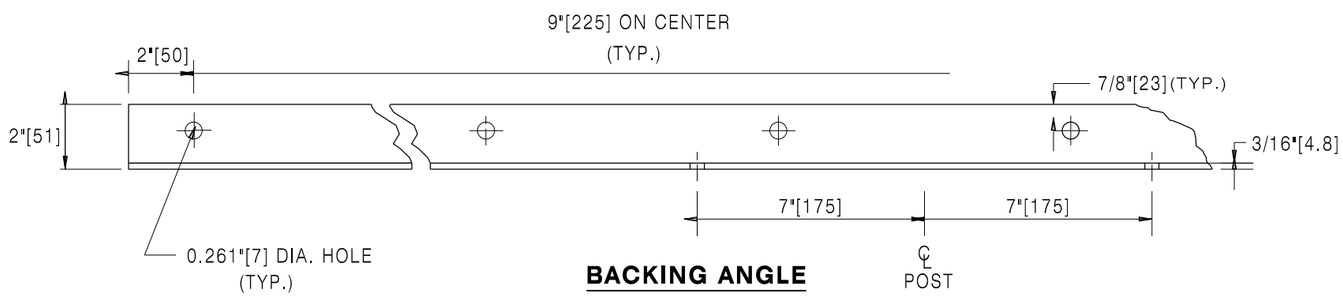

BACKING ANGLE

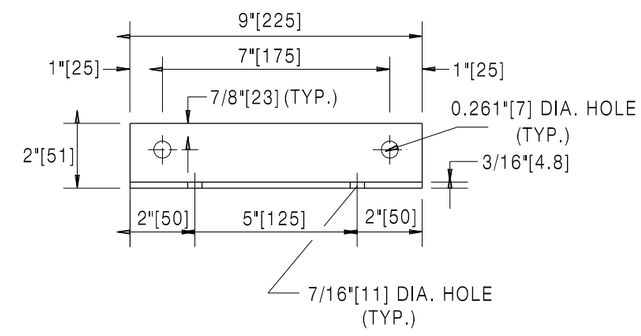

BACKING ANGLE

BACKING ANGLE OR CLIP ANGLE DETAILS

Designed by: TRAFFIC Drawn by: JTG Checked by: TRAFFIC Previous Dwg. No. 703-1D	SIGN STRUCTURE DETAILS	WYOMING DEPARTMENT OF TRANSPORTATION	CONSTRUCTION TRAFFIC CONTROL DEVICES STANDARD PLAN
Note: Units shown in brackets [ ] are metric and are in millimeters (mm) unless other units are shown.			STANDARD PLAN NUMBER 703-1E SHEET 10 of 12 Issued by: TRAFFIC PROGRAM Date Issued: July, 2012

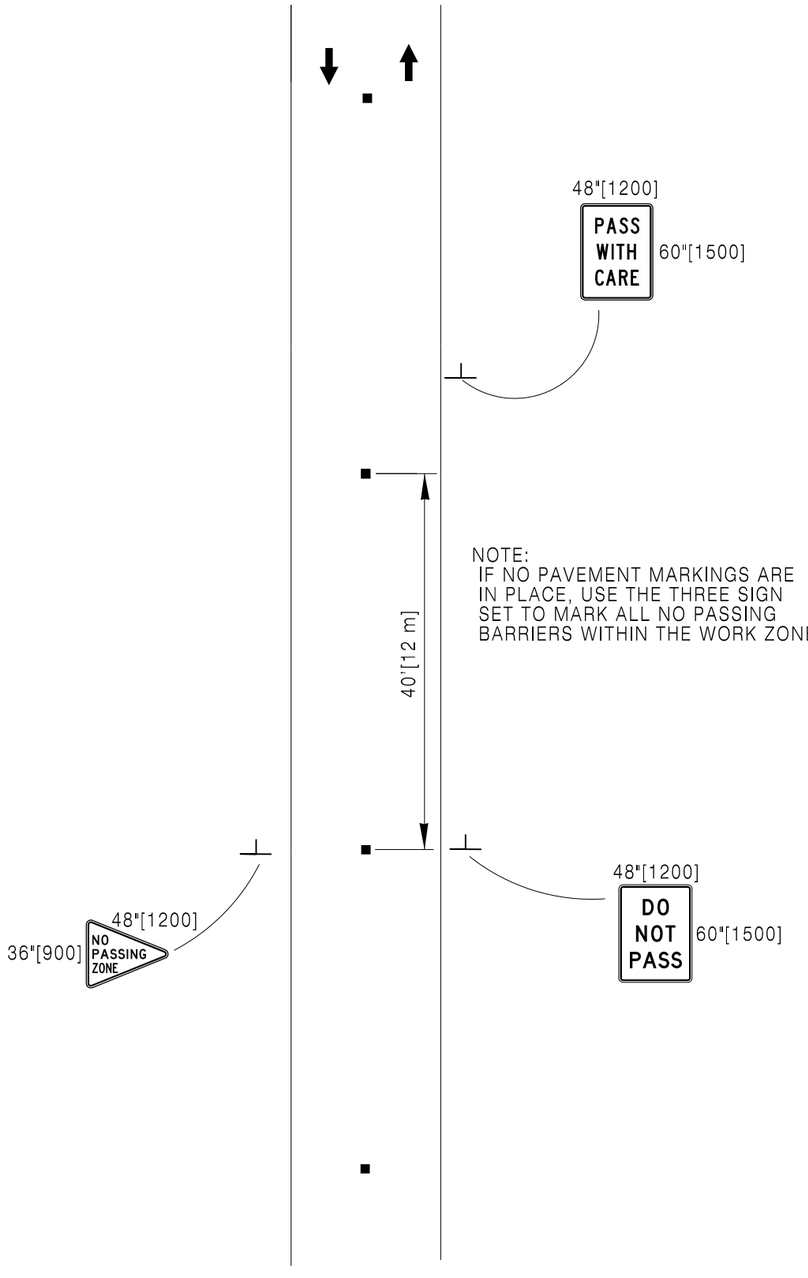

2 LANE 2-WAY ROADWAYS USING RAISED PAVEMENT MARKERS OR MOTORIST GUIDANCE MARKERS, CENTERLINE AND THREE SIGN SEQUENCE, INCLUDING NO-PASSING ZONE

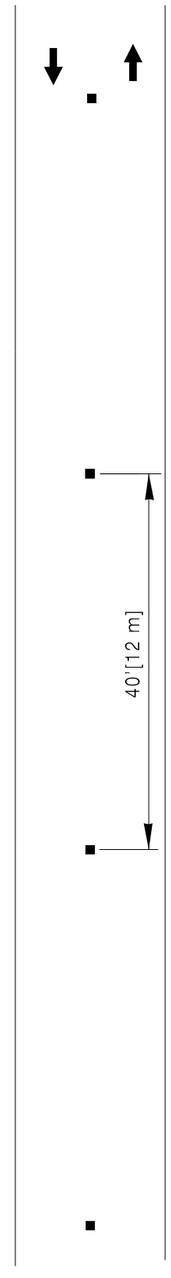

2 LANE 2-WAY ROADWAY (CENTER LINE) USING RAISED PAVEMENT MARKERS OR MOTORIST GUIDANCE MARKERS

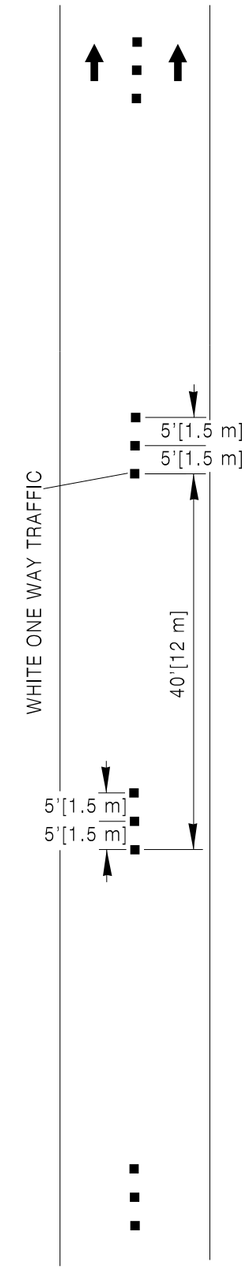

INTERSTATE (LANE LINE) USING RAISED PAVEMENT MARKERS

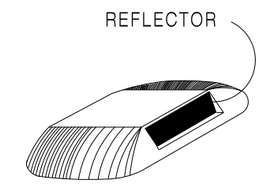

2" x 4"[50 x 100] TEMPORARY RAISED PAVEMENT MARKERS

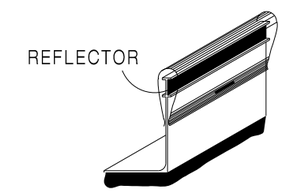

MOTORIST GUIDANCE MARKERS

LEGEND

■ TEMPORARY MARKERS

Designed by: TRAFFIC Drawn by: JTG Checked by: TRAFFIC Previous Dwg. No. 703-1D	FINAL SURFACE TREATMENT TEMPORARY PAVEMENT MARKERS	WYOMING DEPARTMENT OF TRANSPORTATION	**CONSTRUCTION TRAFFIC CONTROL DEVICES** STANDARD PLAN	STANDARD PLAN NUMBER **703-1E** SHEET 11 of 12 Issued by: TRAFFIC PROGRAM Date Issued: July, 2012

Note: Units shown in brackets [ ] are metric and are in millimeters (mm) unless other units are shown.

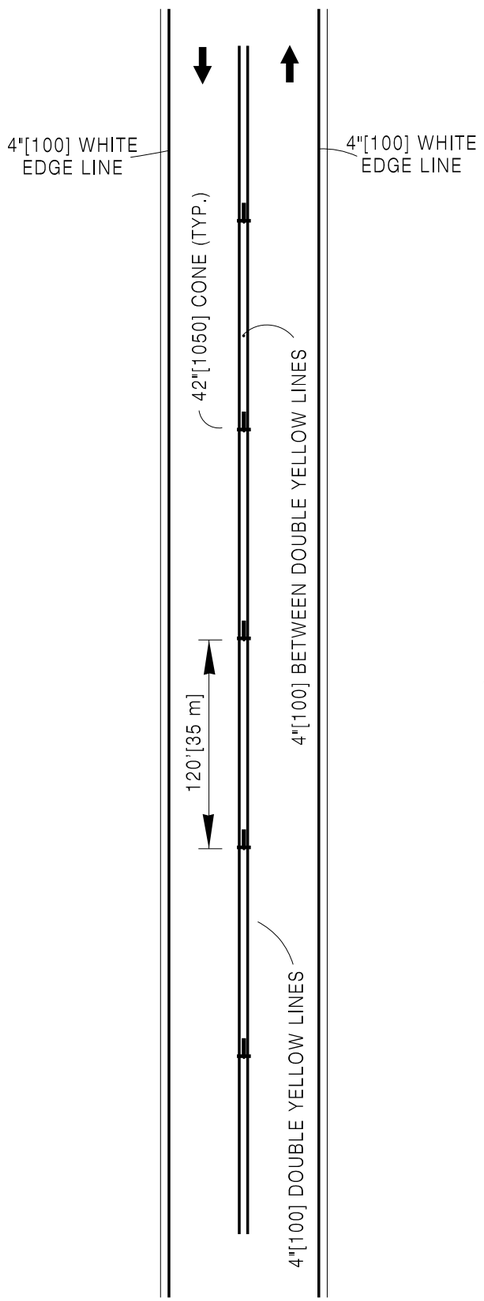

ONE LANE OF INTERSTATE
(2 LANE 2-WAY DURING CONSTRUCTION)
TEMPORARY STRIPING TAPE OR PAINT

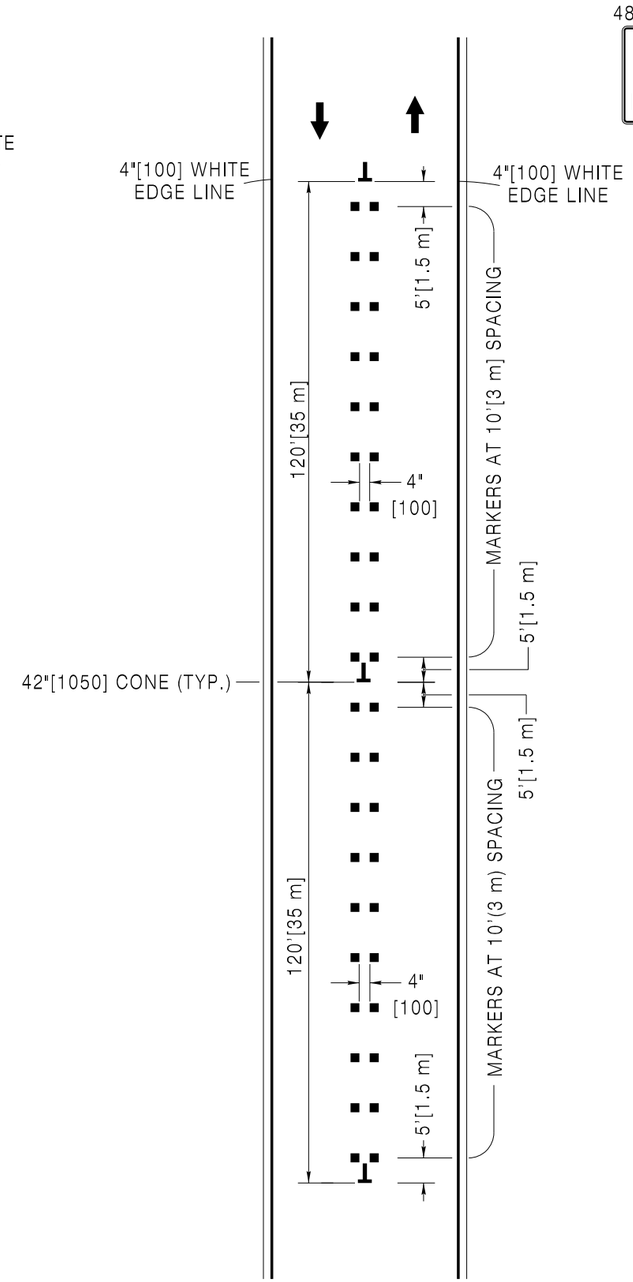

ONE LANE OF INTERSTATE
(2 LANE 2-WAY DURING CONSTRUCTION)
RAISED PAVEMENT MARKERS
DOUBLE SIDE (YELLOW)

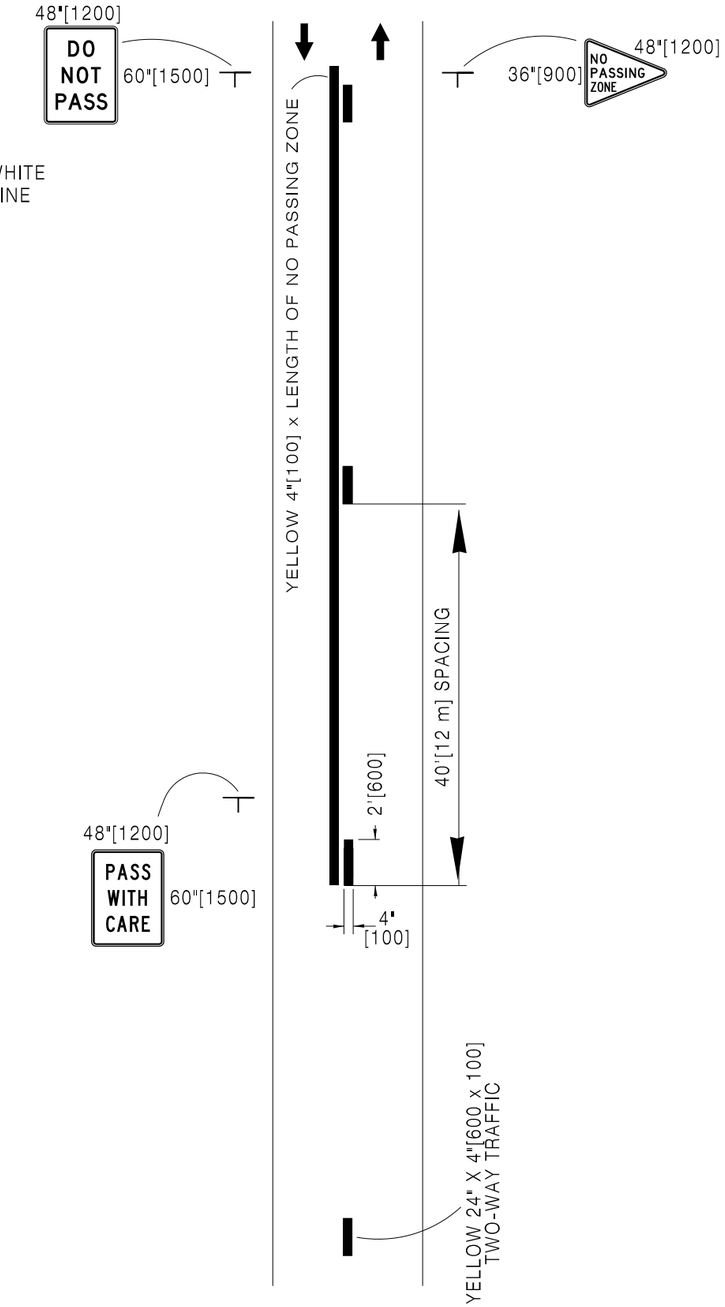

2 LANE 2-WAY ROADWAY
USING TEMPORARY STRIPING TAPE OR
PAINT CENTERLINE AND SOLID LINES
INCLUDING NO-PASSING ZONE

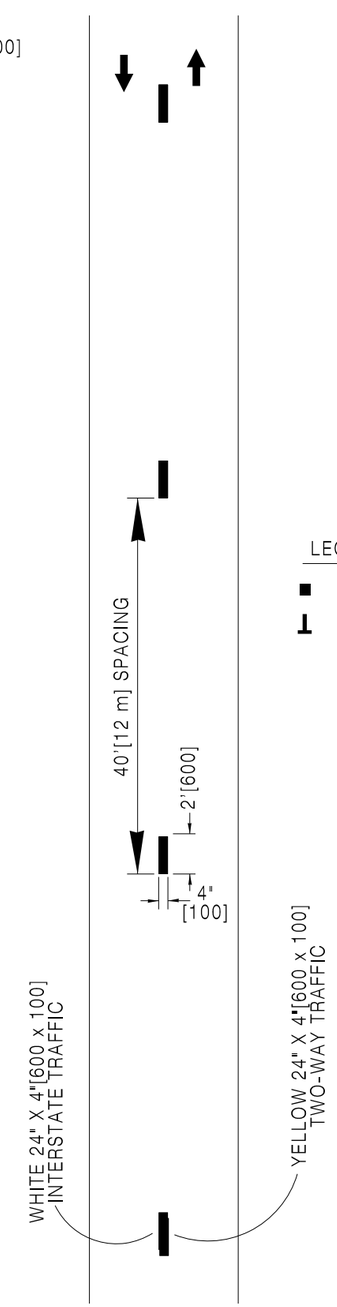

2 LANE 2-WAY ROADWAY
(CENTER LINE) OR INTERSTATE
(LANE LINE) USING TEMPORARY
STRIPING TAPE OR PAINT

LEGEND

- TEMPORARY MARKERS
- 42"[1050] CONE

Designed by: TRAFFIC	INTERMEDIATE LIFT TEMPORARY PAVEMENT MARKERS
Drawn by: JTG	
Checked by: TRAFFIC	
Previous Dwg. No. 703-1D	

Note: Units shown in brackets [ ] are metric and are in millimeters (mm) unless other units are shown.

WYOMING DEPARTMENT OF TRANSPORTATION

CONSTRUCTION TRAFFIC CONTROL DEVICES

STANDARD PLAN

STANDARD PLAN NUMBER
703-1E
SHEET 12 of 12
Issued by: TRAFFIC PROGRAM
Date Issued: July, 2012

✱ USE ONLY IF NO PREVIOUS "ROAD WORK AHEAD" SIGNS WITHIN 1 MILE [1.6 km], OR IF OUTSIDE OF THE REGULAR CONSTRUCTION AREA.

♦ TYPICAL APPROACH SIGNING, SIGN FOR BOTH DIRECTIONS (SIGNS SHOWN FOR ONE DIRECTION OF TRAVEL ONLY).

LEGEND

- TYPE II DELINEATOR
- CONSTRUCTION AREA
- STORAGE AREA
- DRUM

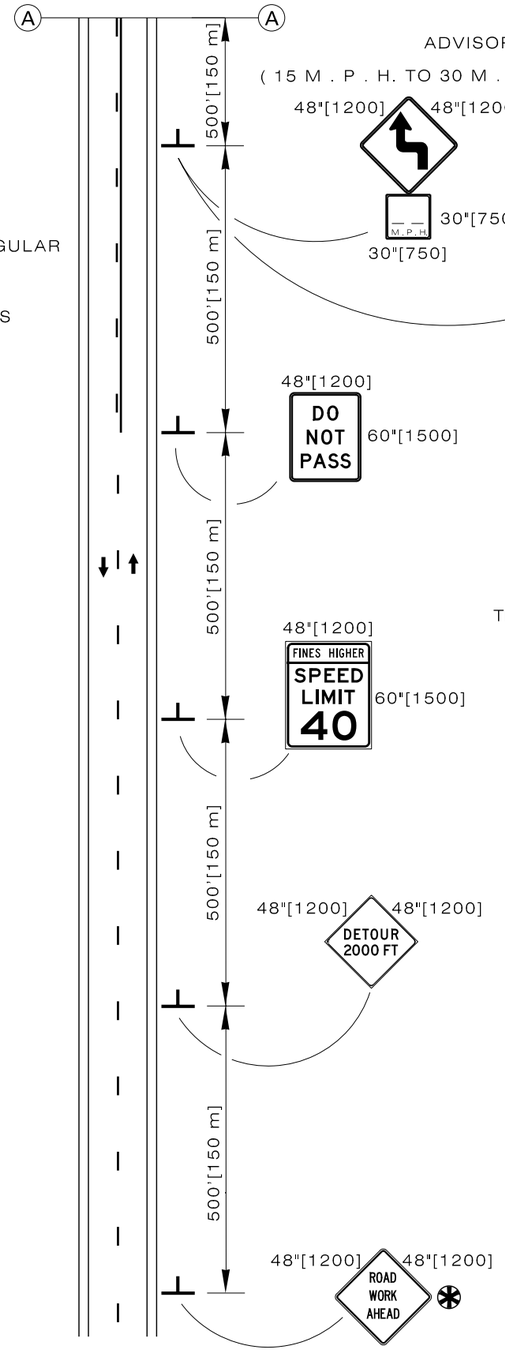

♦ **TYPICAL APPROACH SIGNING**

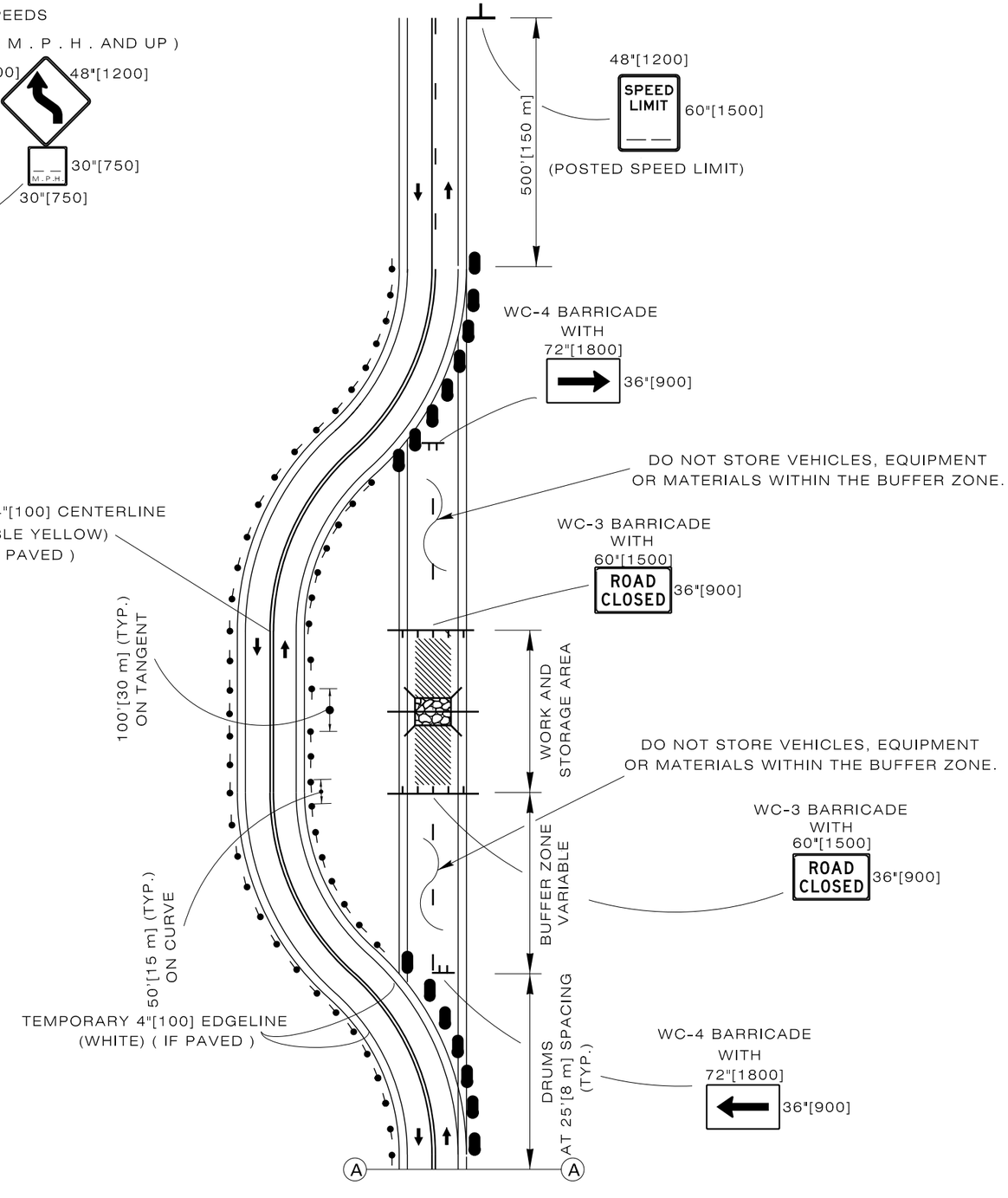

Designed by: TRAFFIC	TYPICAL TRAFFIC CONTROL SIGNING FOR DETOUR AROUND CONSTRUCTION
Drawn by: JTG	
Checked by: TRAFFIC	
Previous Dwg. No. 703-2C	

Note: Units shown in brackets [ ] are metric and are in millimeters (mm) unless other units are shown.

WYOMING DEPARTMENT OF TRANSPORTATION

CONSTRUCTION TRAFFIC CONTROL TWO LANE

STANDARD PLAN

STANDARD PLAN NUMBER

703-2D

SHEET 1 of 6

Issued by: TRAFFIC PROGRAM

Date Issued: FEBRUARY, 2011

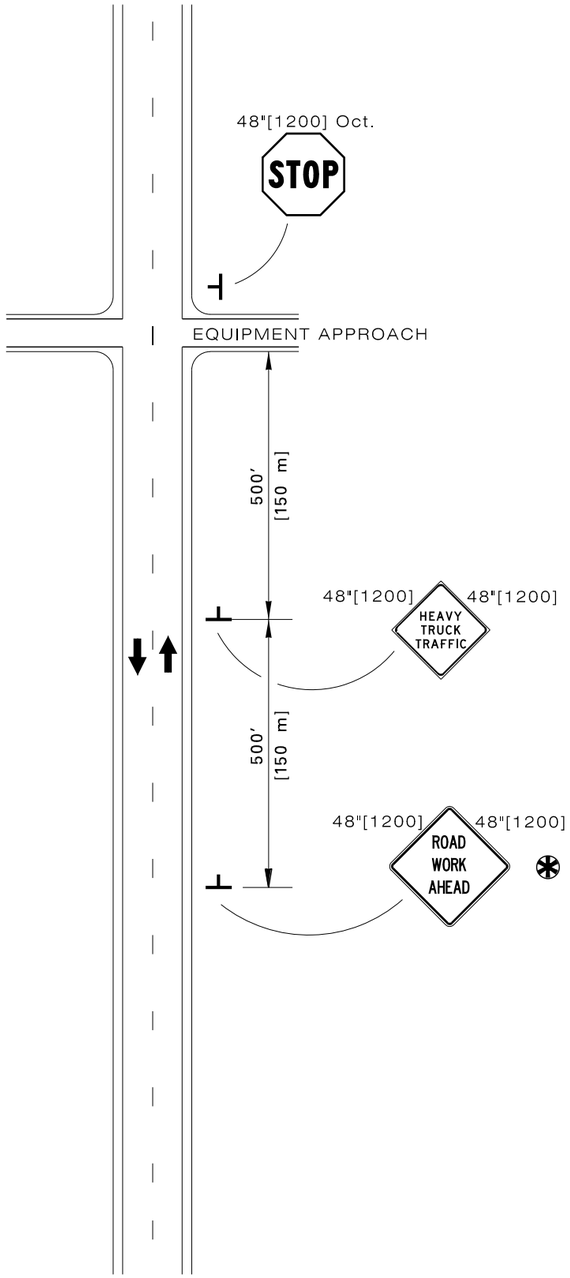

EQUIPMENT CROSSING STOP CONTROL

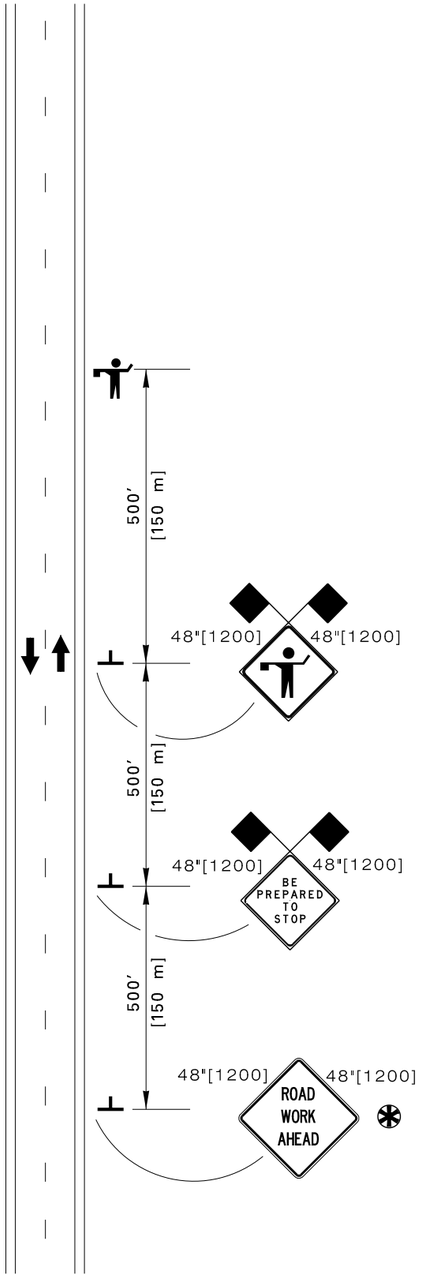

TYPICAL FLAGGER STATION SIGNING

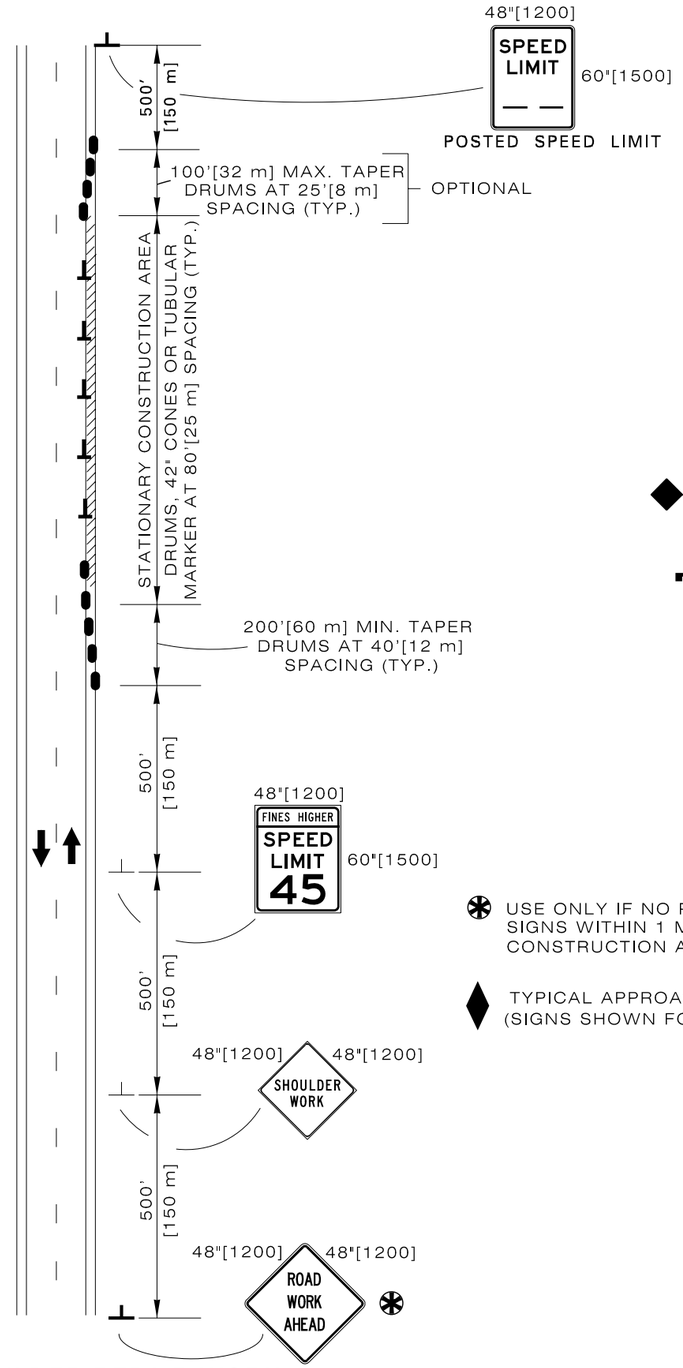

SHOULDER REPAIR WORK 10'[3 m] MIN. LANE WIDTH

LEGEND

- DRUM
- FLAGS
- FLAGGER
- CONSTRUCTION AREA
- DRUM, 42"[1050] CONE OR TUBULAR MARKER

✱ USE ONLY IF NO PREVIOUS "ROAD WORK AHEAD" SIGNS WITHIN 1 MILE [1.6 km], OR IF OUTSIDE OF THE REGULAR CONSTRUCTION AREA.

♦ TYPICAL APPROACH SIGNING, SIGN FOR BOTH DIRECTIONS (SIGNS SHOWN FOR ONE DIRECTION OF TRAVEL ONLY).

Designed by: TRAFFIC Drawn by: JTG Checked by: TRAFFIC Previous Dwg. No. 703-2C	TYPICAL TRAFFIC CONTROL SIGNING	WYOMING DEPARTMENT OF TRANSPORTATION	**CONSTRUCTION TRAFFIC CONTROL TWO LANE** STANDARD PLAN	STANDARD PLAN NUMBER **703-2D** SHEET 2 of 6 Issued by: TRAFFIC PROGRAM Date Issued: FEBRUARY, 2011

Note: Units shown in brackets [ ] are metric and are in millimeters (mm) unless other units are shown.

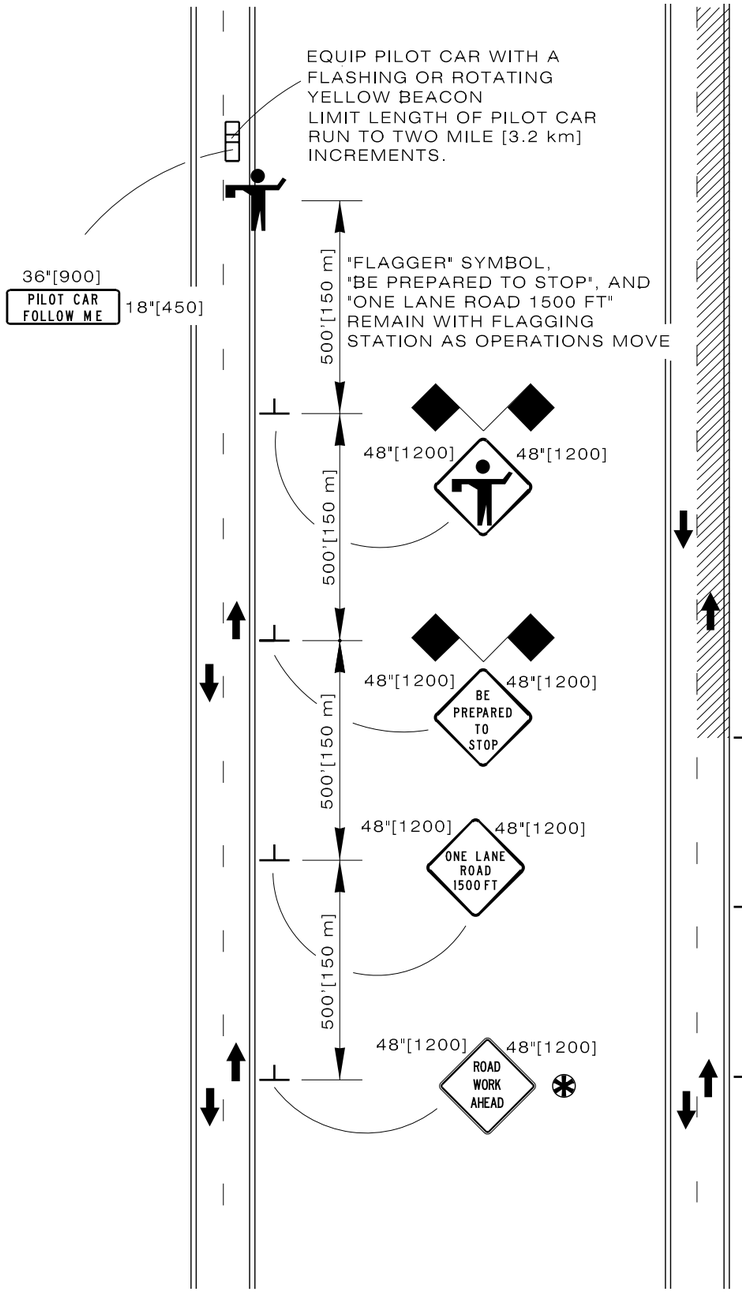

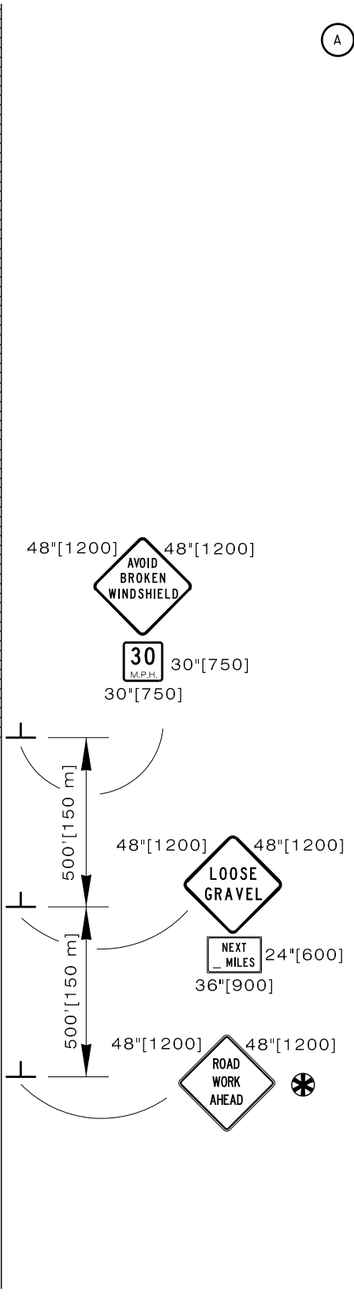

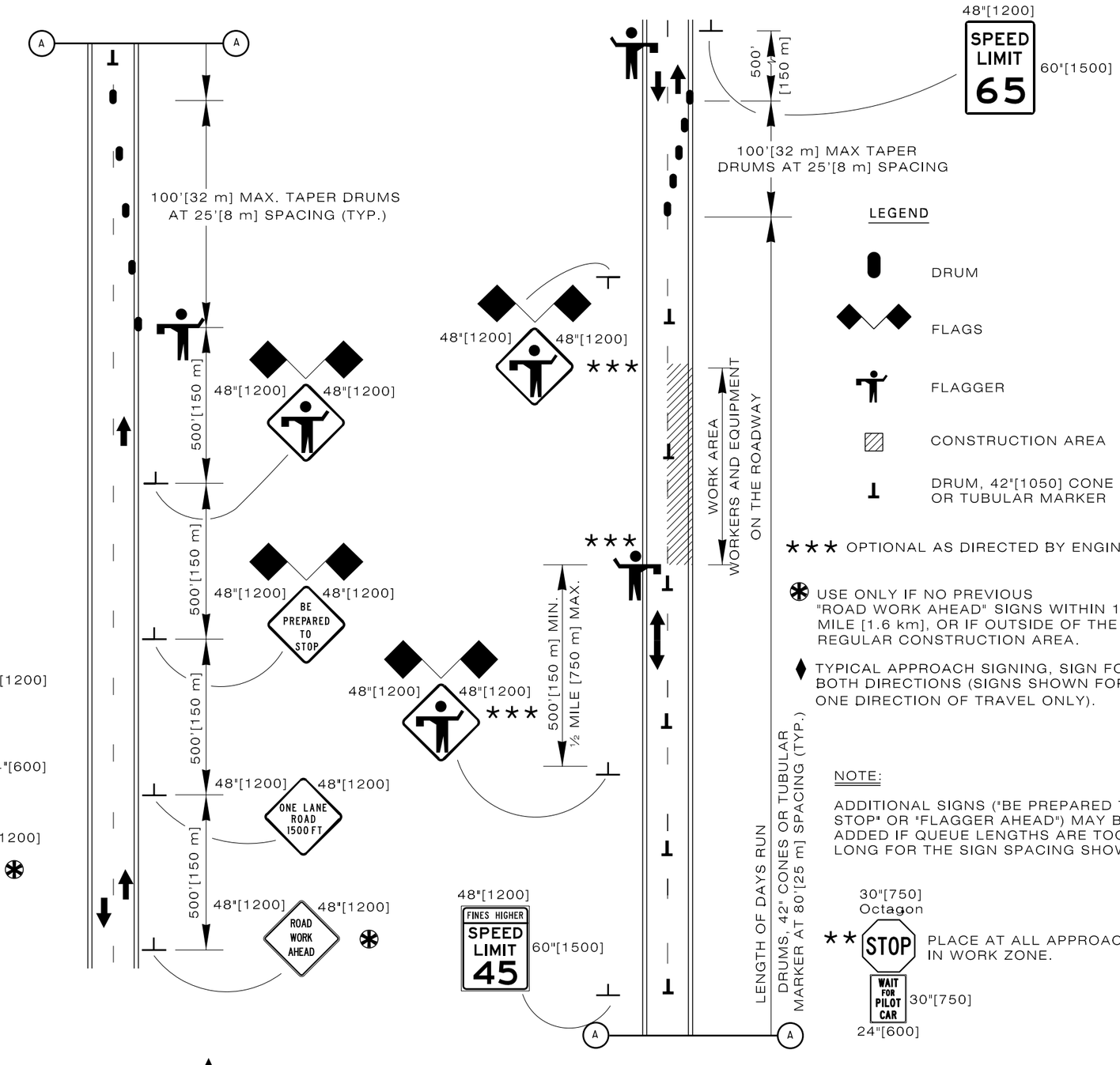

PILOT CAR OPERATIONS MOBILE OR STATIONARY WORK SITE

ROADWAY CHIP SEALING

OPERATIONS FOR ONE LANE CLOSURE ON A TWO LANE ROAD

Designed by: TRAFFIC	TYPICAL TRAFFIC CONTROL SIGNING
Drawn by: JTG	
Checked by: TRAFFIC	
Previous Dwg. No. 703-2C	

Note: Units shown in brackets [ ] are metric and are in millimeters (mm) unless other units are shown.

WYOMING DEPARTMENT OF TRANSPORTATION

CONSTRUCTION TRAFFIC CONTROL TWO LANE

STANDARD PLAN

STANDARD PLAN NUMBER **703-2D**

SHEET 3 of 6

Issued by: TRAFFIC PROGRAM

Date Issued: FEBRUARY, 2011

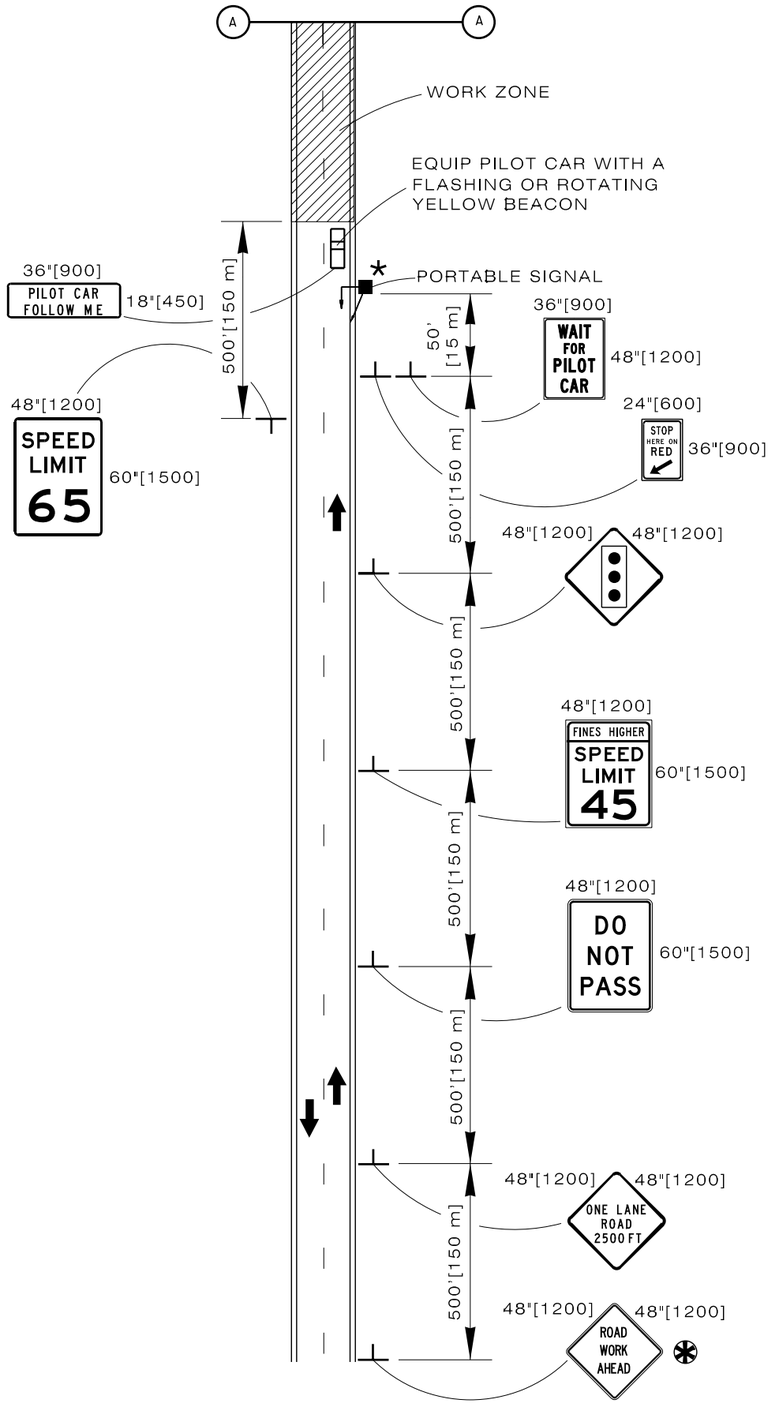

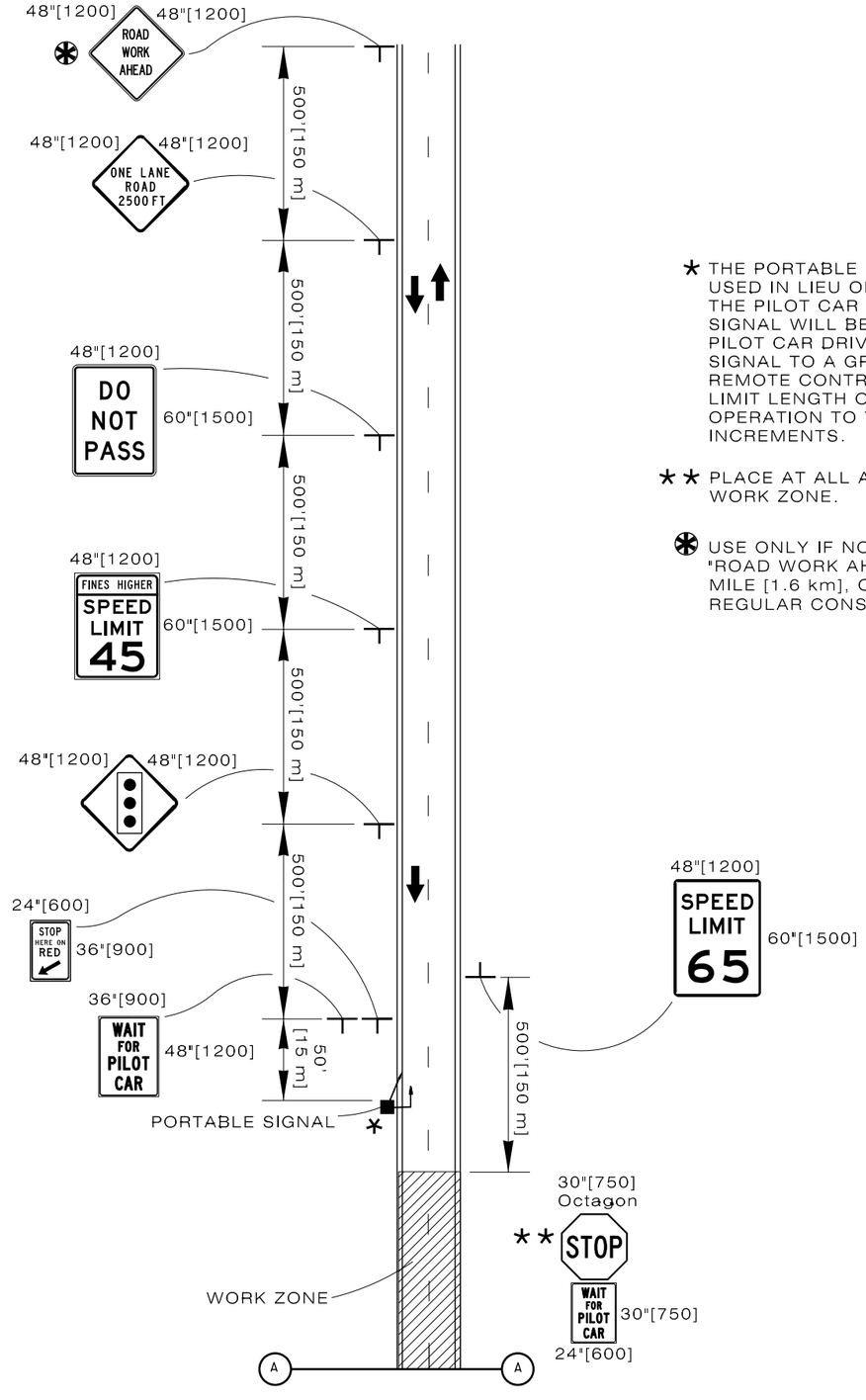

* THE PORTABLE SIGNAL MAY BE USED IN LIEU OF FLAGGERS FOR THE PILOT CAR OPERATION. THE SIGNAL WILL BE RED UNTIL THE PILOT CAR DRIVER CHANGES THE SIGNAL TO A GREEN LIGHT WITH REMOTE CONTROL.
LIMIT LENGTH OF PILOT CAR OPERATION TO TWO MILE [3.2 km] INCREMENTS.

** PLACE AT ALL APPROACHES IN WORK ZONE.

⊛ USE ONLY IF NO PREVIOUS "ROAD WORK AHEAD" SIGNS WITHIN 1 MILE [1.6 km], OR IF OUTSIDE OF THE REGULAR CONSTRUCTION AREA.

Designed by: TRAFFIC Drawn by: JTG Checked by: TRAFFIC Previous Dwg. No. 703-2C	TYPICAL SIGNING FOR PILOT CAR WITH PORTABLE SIGNAL	WYOMING DEPARTMENT OF TRANSPORTATION	**CONSTRUCTION TRAFFIC CONTROL TWO LANE** STANDARD PLAN	STANDARD PLAN NUMBER **703-2D** SHEET 4 of 6 Issued by: TRAFFIC PROGRAM Date Issued: FEBRUARY, 2011

Note: Units shown in brackets [ ] are metric and are in millimeters (mm) unless other units are shown.

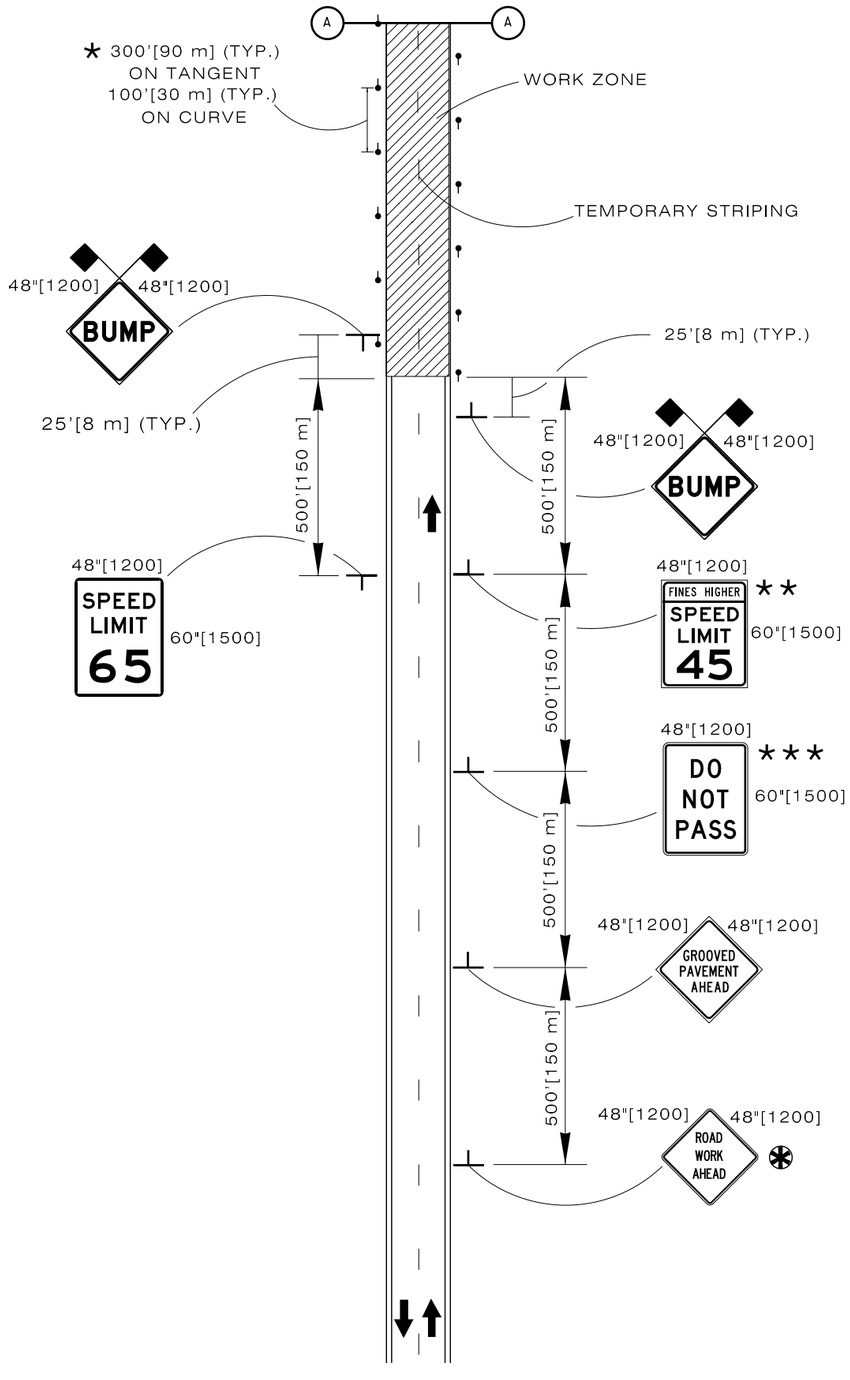

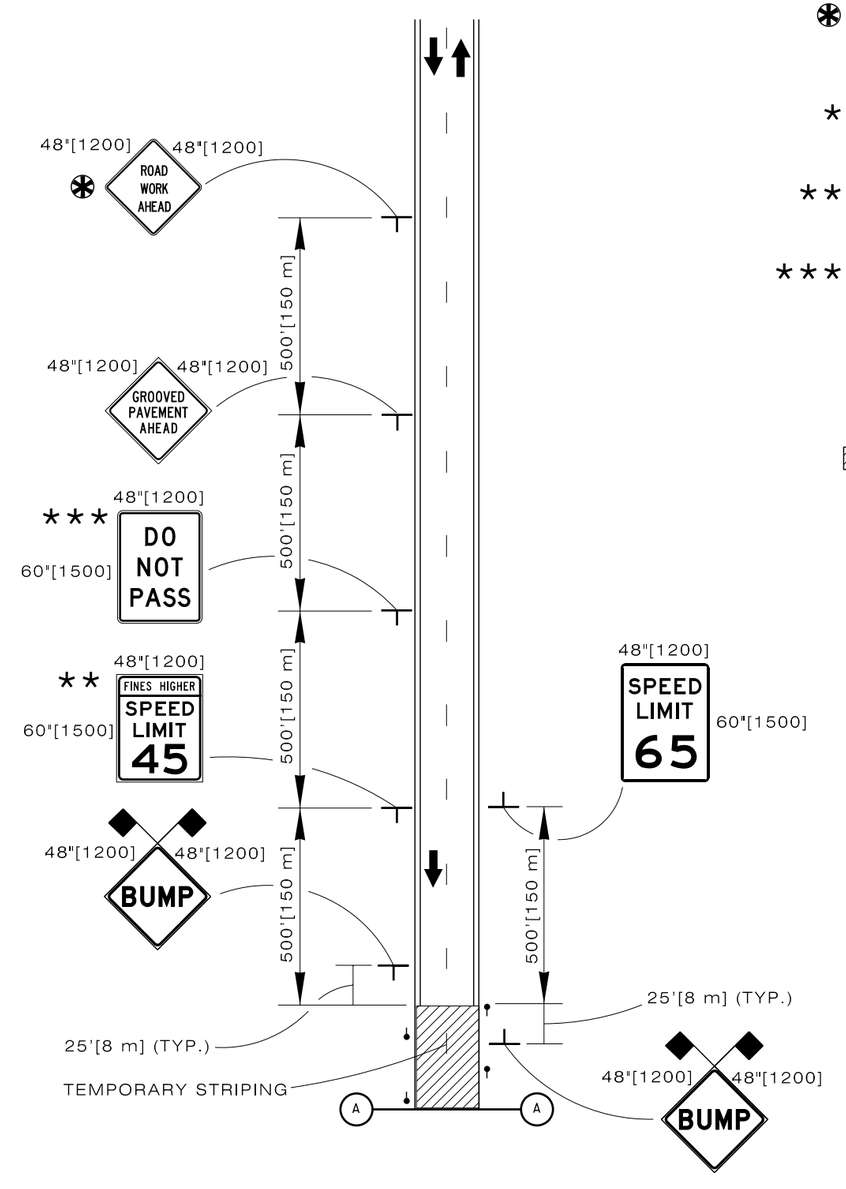

USE ONLY IF NO PREVIOUS "ROAD WORK AHEAD" SIGNS WITHIN 1 MILE [1.6 km], OR IF OUTSIDE OF THE REGULAR CONSTRUCTION AREA.

* USE TUBULAR MARKERS IN PLACE OF DELINEATORS WHERE DELINEATORS ARE NOT PRESENT.

** SPEED LIMIT TO BE DETERMINED BY THE ENGINEER ACCORDING TO THE CONDITION OF THE MILLED SURFACE.

*** USE IF BARRIERS ARE NOT MARKED.

LEGEND

GROOVED (MILLED) SURFACE

EXISTING DELINEATORS OR TUBULAR MARKERS

Designed by: TRAFFIC	
Drawn by: JTG	
Checked by: TRAFFIC	
Previous Dwg. No. 703-2D	

TYPICAL SIGNING FOR GROOVED (MILLED) PAVEMENT

Note: Units shown in brackets [ ] are metric and are in millimeters (mm) unless other units are shown.

WYOMING DEPARTMENT OF TRANSPORTATION

CONSTRUCTION TRAFFIC CONTROL TWO LANE

STANDARD PLAN

STANDARD PLAN NUMBER

703-2D

SHEET 5 of 6

Issued by: TRAFFIC PROGRAM

Date Issued: FEBRUARY, 2011

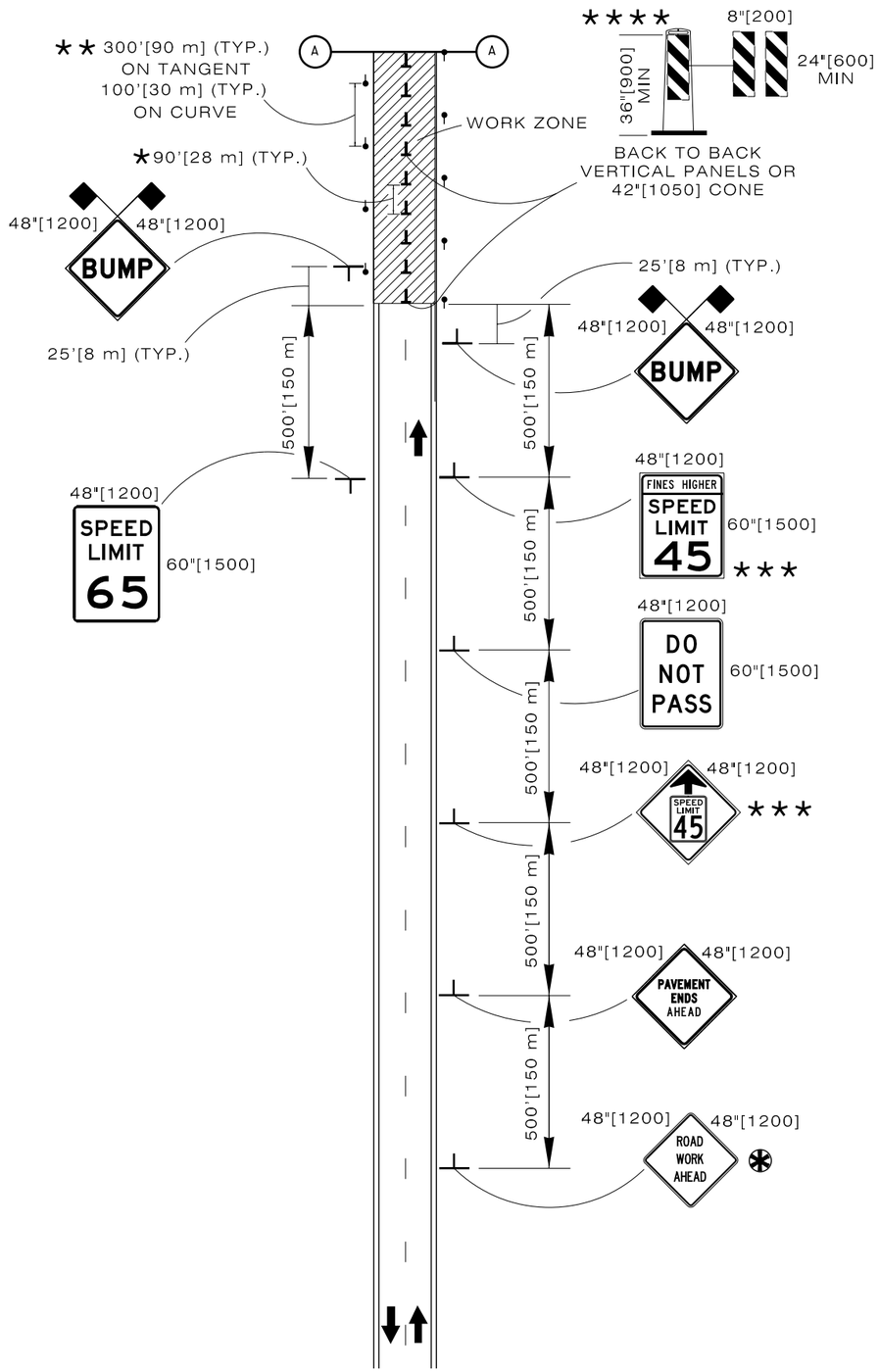

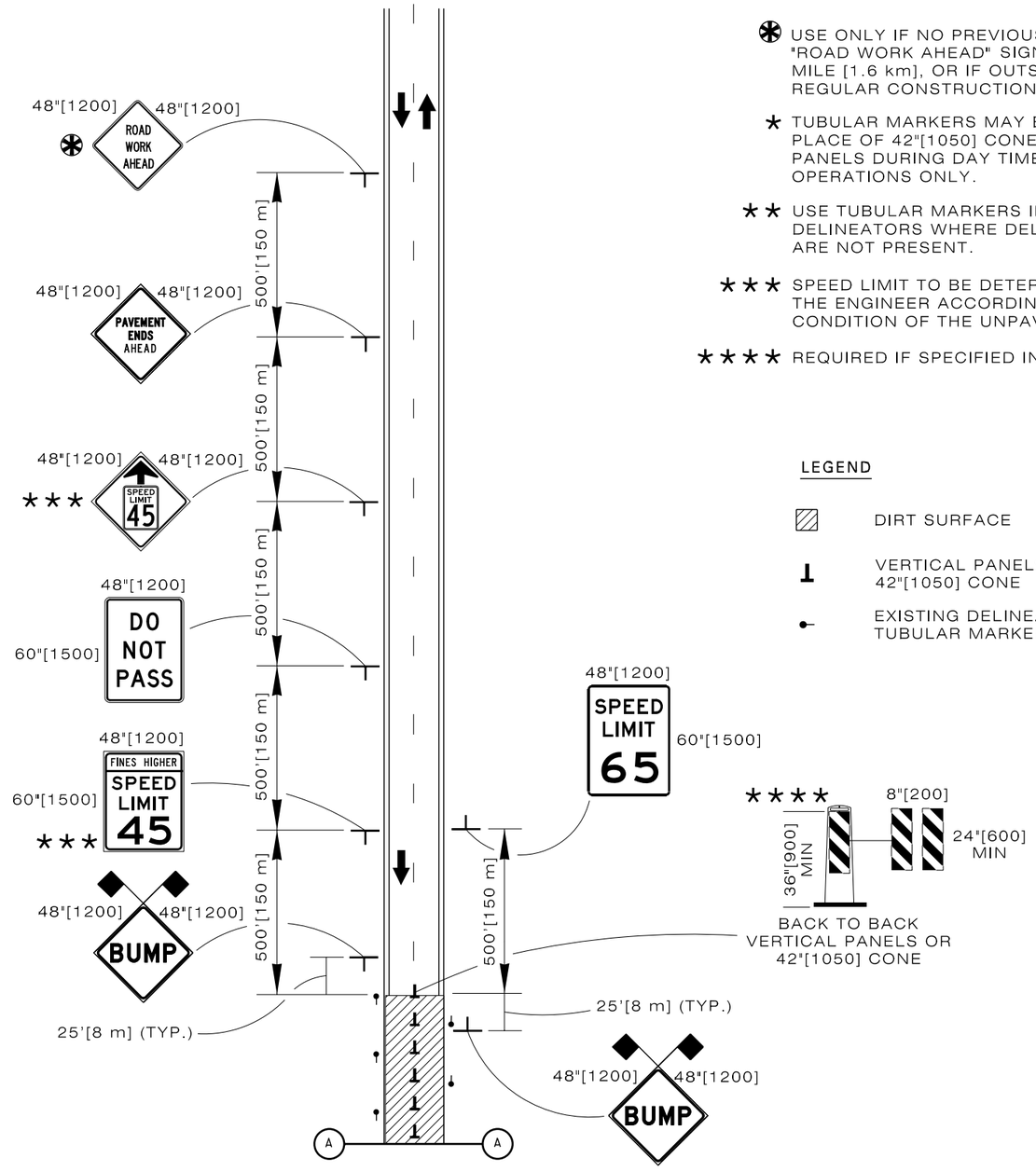

✱ USE ONLY IF NO PREVIOUS "ROAD WORK AHEAD" SIGNS WITHIN 1 MILE [1.6 km], OR IF OUTSIDE OF THE REGULAR CONSTRUCTION AREA.

★ TUBULAR MARKERS MAY BE USED IN PLACE OF 42"[1050] CONES OR VERTICAL PANELS DURING DAY TIME OPERATIONS ONLY.

★★ USE TUBULAR MARKERS IN PLACE OF DELINEATORS WHERE DELINEATORS ARE NOT PRESENT.

★★★ SPEED LIMIT TO BE DETERMINED BY THE ENGINEER ACCORDING TO THE CONDITION OF THE UNPAVED SURFACE.

★★★★ REQUIRED IF SPECIFIED IN CONTRACT.

LEGEND

DIRT SURFACE

VERTICAL PANELS OR 42"[1050] CONE

EXISTING DELINEATORS OR TUBULAR MARKERS

Designed by: TRAFFIC Drawn by: JTG Checked by: TRAFFIC Previous Dwg. No. 703-2D	TYPICAL SIGNING FOR UNPAVED SURFACE	WYOMING DEPARTMENT OF TRANSPORTATION	CONSTRUCTION TRAFFIC CONTROL TWO LANE STANDARD PLAN	STANDARD PLAN NUMBER 703-2D SHEET 6 of 6 Issued by: TRAFFIC PROGRAM Date Issued: FEBRUARY, 2011

Note: Units shown in brackets [ ] are metric and are in millimeters (mm) unless other units are shown.