PEDESTRIAN-BICYCLE BRIDGE OVER SNAKE RIVER

STA 30+38.71

PATHWAY 22 OVER SNAKE RIVER

TETON COUNTY

INDEX OF DRAWINGS

Bridge Drawing:

Title Sheet	1
General Notes	2-3
General Plan and Elevation	4-5
Cross Sections	6
Substructure Layout	7
Log Boring Sheets	8-15
Abutment No. 1 Details	16-17
Pier Details	18-21
Abutment No. 2 Details	22-23
Superstructure Details	24-32
Bearing Details	33-34
Expansion Joint Details	35
Slab Details	36-38
Pedestrian Railing Details	39-41
Approach Slab Details	42-43

DESIGN DATA

SPECIFICATIONS: AASHTO LRFD Guide Specifications, for Design of Pedestrian Bridges, 2nd Edition 2009.
AASHTO LRFD Bridge Design Specifications, 6th Edition.
AASHTO Guide Specifications for LRFD Seismic Bridge Design, 2nd Edition 2011.
AASHTO Standard Specifications for Structural Supports for Highway Signs, Luminaires and Traffic Signals, 4th Edition with 2006 Interims.

ADT: None

LOADING: H10 Truck or 90 psf Pedestrian Live Load. Future wearing surface 18 psf. Stay-in-place forms 15 psf. Utility 16 plf.

REINFORCED CONCRETE: Load and Resistance Factor Design -
Class A Concrete = 3750 psi
Class B Concrete = 3250 psi
Class B Concrete (Special) = 3250 psi
Reinforcing Steel = 60,000 psi (Grade 60)

STRUCTURAL STEEL: Load and Resistance Factor Design -
F_y = 50,000 psi (Grade 50W) & Grade 50 (for HP Piles only)

APPROACH PATH WIDTH: 16'-0"

PILE LOADS: Load and Resistance Factor Design -
Abutment Nos. 1 and 2 = 112 T per pile
Pier No. 1 and 3 = 173 T per pile
Pier No. 2 = 174 T per pile

BEARING LOADS:
Abutment Nos. 1 and 2 Service Dead Load = 64.8 kips
Abutment Nos. 1 and 2 Service Live Load = 54.3 kips
Pier Nos. 1 and 3 Service Dead Load = 242.8 kips
Pier Nos. 1 and 3 Service Live Load = 138.9 kips
Pier No. 2 Service Dead Load = 240.9 kips
Pier No. 2 Service Live Load = 144.5 kips

SEISMIC CRITERIA: Seismic Design Category C
Horizontal Peak Ground Acceleration, modified by short-period site factor, A_S = 0.396
Horizontal Response Spectral Acceleration Coefficient for 0.2 second period, modified by short-period site factor, S_{DS} = 0.928
Horizontal Response Spectral Acceleration Coefficient for 1.0 second period, modified by long-period site factor, S_{D1} = 0.479
Site Class D
5% Damping

Professional Engineer (Civil)
FRANK P. BLAKEMORE III
12224
Date 1/8/13
WYOMING

ESTIMATED QUANTITIES - CODE 8

ITEM NO.	ITEM	UNIT	TOTAL QUANTITY	ESTIMATE
212.02100	DRY EXCAVATION	CY	110	
212.02200	WET EXCAVATION	CY	830	
217.01030	GEOTEXTILE, EMB AND RETAINING WALL	SY	864	
501.01000	STRUCTURAL STEEL	LS	LUMP SUM	1,099,700 LB
503.01400	PEDESTRIAN RAILING	FT	1423	
504.04010	PILE SPLICES	EA	1	
504.11253	STEEL PILING HP12x53	FT	804	
504.114102	STEEL PILING HP14x102	FT	2106	
507.01000	REINFORCED CONCRETE APPROACH SLAB	SY	43	
507.01100	BRIDGE APPROACH BACKFILL	CY	255	
512.01012	EXPANSION JOINT (PLATE)	FT	28	
513.00005	CLASS A CONCRETE (STR)	LS	LUMP SUM	241.9 CY
513.00015	CLASS B CONCRETE (STR)	LS	LUMP SUM	226.8 CY
514.00015	REINFORCING STEEL	LS	LUMP SUM	74,930 LB
514.00025	REINFORCING STEEL (COATED)	LS	LUMP SUM	48,460 LB
605.10006	UNDERDRAIN PIPE (PERF) 6 IN.	FT	39	
605.20006	UNDERDRAIN PIPE (NON-PERF) 6 IN.	FT	49	

PATH 22
HNTB
TETON COUNTY
TOWN OF JACKSON WYOMING

DRAWING TITLE
TITLE SHEET
PATHWAY 22 OVER SNAKE RIVER
STA. 30+38.71

REVISIONS

DRAWING NO 1
JOB NO 10-124-02
DATE 1/9/13

GENERAL NOTES

SPECIFICATIONS: WYDOT Standard Specifications for Road and Bridge Construction, 2010 Edition.

DIMENSIONS: Longitudinal dimensions are horizontal and include no correction for grade unless noted. Slopes are vertical : horizontal.

CONCRETE: Use Class A concrete in the deck. Use Class B Concrete "Special" in the approach slabs per project special provision. Use Class B concrete at all other locations.

REINFORCING STEEL: Concrete cover to face of reinforcing steel is 2" unless noted. Dimensions for bent bars are out to out. Ensure bars marked with an asterisk (*) are coated.

BAR MARKS

Straight Bars

Size — Length

508-3

Bent Bars

Size — Designation

4A2

STRUCTURAL STEEL: Ensure structural steel conforms to ASTM A 709 (Grade 50W) unless noted. Ensure steel fabricators supplying structural components are certified under the AISC Quality Certification Program, Category Major Steel Bridges (CBR).

Ensure structural tubing or hollow structural sections (HSS) for pedestrian railing conform to ASTM A 500 (Grade A). Pipe rail for pedestrian railing shall conform to A53, Type E, Grade B. Wire rope for pedestrian rail shall be $\frac{5}{16}$" diameter consisting of 19 individual wires. Wires shall be stainless steel meeting the requirements of ASTM A492, Type 316. Ensure all other structural steel components of bridge railing and pedestrian railing conform to ASTM A 709 (Grade 50).

Ensure steel components of the deck drain system conform to ASTM A 709 (Grade 50W) minimum and ASTM A 53 (Grade A or B). After fabrication operations are completed, ensure components are prepared in accordance with Steel Structures Painting Council Surface Preparation Specification No. 6 Commercial Blast Cleaning (SSPC-SP 6).

BOLTS: Bolts are $\frac{7}{8}$" diameter unless noted otherwise. Standard holes are used for all bolt sizes unless noted otherwise. Bolts shall conform to the requirements of ASTM A 325 Type 3 bolts.

STEEL PILING: At Abutment Nos. 1 and 2 and Pier Nos. 1, 2 and 3, use steel piling conforming to ASTM A 709 (Grade 50). Work necessary to attach pile points is incidental to the respective contract pay item Steel Piling HP 12x53 and Steel Piling HP 14x102.

BRIDGE BEARING ANCHOR BOLTS: Use one of the following adhesive anchorage systems for setting anchor bolts:

Epoxy Anchoring Systems as manufactured by Covert Operations
Epcon System as manufactured by ITW Ramset/Red Head
Sure-Anchor 1 (J-51) as manufactured by Dayton Superior
HIT-RE 500 System as manufactured by Hilti, Inc.

Use anchor bolts compatible with the adhesive product. Prepare holes and set anchor bolts as recommended by the manufacturer. Anchor bolts may be swedge bolts or threaded rod. Ensure swedge bolts conform to ASTM F 1554 (Grade 105). Ensure the swedges are produced by deforming the steel through application of pressure, and not by any method such as grinding or cutting that removes material. Ensure threaded rod conforms to ASTM F 1554 (Grade 105). Work necessary for the anchorage system is incidental to the contract pay item Structural Steel.

DRY EXCAVATION: The estimated quantity of dry excavation is calculated below existing ground line to the limits shown at both approach slabs and abutments.

WET EXCAVATION: The estimated quantity of wet excavation is calculated below elevation 6158.11 at Pier Nos. 1, 2 and 3.

FOUNDATIONS: Abutment Nos. 1 and 2 and Pier Nos. 1, 2 and 3 are on steel piles driven to the nominal soil resistance in dense gravel. The total factored load is 112 Tons for HP12x53 piles. The total factored load is 176 Tons for HP14x102 piles. Pile lengths are estimated. Actual lengths will be determined by dynamic load testing. Before full production pile driving, the Engineer will take dynamic load measurements at the piles indicated on the substructure layout. Restrike all test piles. Pile points shall be used to protect the pile tip during driving.

STAY-IN-PLACE FORMS: Stay-in-place slab forms may be used for construction of the deck. Do not exceed 15 psf for the weight of the forms and additional concrete, including form deflection. Do not extend the vertical legs of support angles past the bottom of the bottom reinforcing steel mat or use these legs to support the reinforcing steel.

CROSS FRAMES & DIAPHRAGMS: Diaphragms shall be detailed, fabricated and installed so that they are unloaded at erection, allowing girder webs to be theoretically vertical or plumb under the steel dead load condition.

PAINT: Ensure the paint and primer system conform to the requirements of Section 809 - Paint, of the Standard Specifications. The color of the top coat for the pedestrian railing, similar in appearance to Color Number 7040 of Federal Standard Number 26373. Paint system work is incidental to the contract pay item pedestrian railing. Railing posts, structural tubing and pipe rail shall be prepared and painted in accordance with Subsection 501.4.1.24 - Painting, of the Standard Specifications.

CONCRETE PLACING SEQUENCE: The slab will be placed after all steel is erected and the location of slab construction joints will be as shown on the plans.

BRIDGE DRAINAGE SYSTEM: All structural steel deck drains shall match the dimensions shown on the plans. Drains shall be galvanized per Section 815 of the Standard Specifications. Payment for all deck drainage shall be subsidiary to the contract pay item Structural Steel.

SHEAR CONNECTORS: Shear connectors are intended to be field installed in accordance with Supplementary Specification SS-500F, Automatically End Welded Studs. If shear connectors are shop applied, ensure compliance with OSHA regulations.

TENSION FLANGES AND WEBS: All flanges, webs, splices and connections of girders are defined as tension members for testing requirements indicated in standard specifications.

COFFERDAM CONSTRUCTION: Cofferdams will be required at Pier Nos. 1, 2 and 3, and will not be earthen type. The Contractor shall make every reasonable effort, to the satisfaction of the Engineer, to achieve dewatering of the excavation areas. The Contractor shall submit to the Engineer for approval, computations and details of his proposed cofferdam, watertight forms, dewatering and excavation methods. A cofferdam seal will be allowed. All work necessary to construct the cofferdams is incidental to the contract pay item Wet Excavation.

NOTATION: U.N.O. denotes unless noted otherwise.

WORK ON EXISTING LEVEE: All work on existing levees required for construction of the bridge and approach slabs shall be in accordance with applicable project permits.

GAS LINE UTILITY: A 6 inch diameter gas utility line to be attached to the bridge. Utility shall be placed as close as practical to the location shown in the plans. Utility shall not be attached to the steel angles of the crossframes or end diaphragms. Contractor shall coordinate with utility owner for attachment and material requirements. Contractor shall submit to the Engineer for approval, details of utility attachment to the bridge prior to installation.

MECHANICAL COUPLERS: The resistance of a full mechanical connection shall not be less than 125 percent of the specified yield strength of the bar in tension or compression. All work and cost to install mechanical couplers is incidental to the contract pay item Reinforcing Steel.

PATH 22

HNTB

TETON COUNTY

TOWN OF JACKSON WYOMING

DRAWING TITLE
GENERAL NOTES
PATHWAY 22 OVER SNAKE RIVER
STA. 30+38.71

REVISIONS

DRAWING NO 2
JOB NO 10-124-02
DATE 1/9/13

REFERENCES

Supplementary Specifications:		Dated
SS-100K	Adjustment for Structural Steel	Rev 10-1-10
SS-500B	Welder Qualification	Rev 10-1-10
SS-500D	Certification for Ultrasonic Quality Field Welding	Rev 10-1-10
SS-500E	Bridge Bearing Correction	Rev 10-1-10
SS-500F	Automatically End-Welded Studs	Rev 10-1-10
SS-500G	Structural Concrete with Quality Control and Quality Acceptance	Rev 10-1-10

Special Provisions:	Dated
Cofferdams	01-07-13
Pedestrian Railing	01-07-13
Class B Concrete "Special"	01-07-13

STREAM DATA

Drainage Area	2,500.0 Sq Mi
Channel Slope	0.31%
Description of Channel Material	Sand and gravel
Drift Potential	Trees and brush
Ordinary High Water Elevation	6158.11 ft
Headwater Elevation Q_{100}	n/a
Q_{500}	n/a
High Water Elevation Q_{100}	6160.39 ft
Q_{500}	6161.01 ft
Constricted Velocity Q_{100}	7.05 fps
Q_{500}	7.76 fps
Design Frequency	100 Year
Design Discharge Q_{100}	32,200 cfs
Review Discharge Q_{500}	38,700 cfs
Source of Discharge	Log Pearson Type III
Method of Analysis	HEC-RAS
Flood History	Unknown

DRAWING TITLE
GENERAL NOTES
PATHWAY 22 OVER SNAKE RIVER
STA. 30+38.71

REVISIONS

DRAWING NO 3
JOB NO 10-124-02
DATE 1/9/13

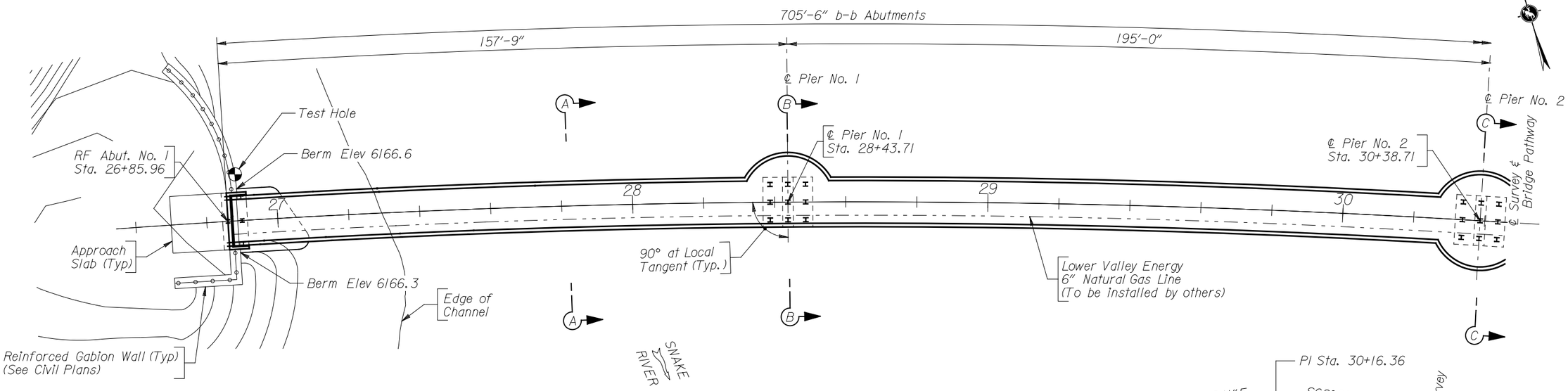

PLAN

(Longitudinal dimensions are along ℄ Survey.)

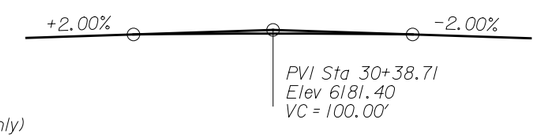

GRADE DATA

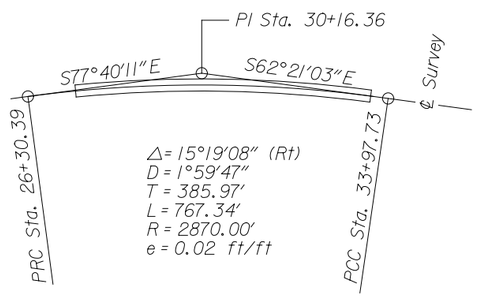

HORIZONTAL CURVE DATA

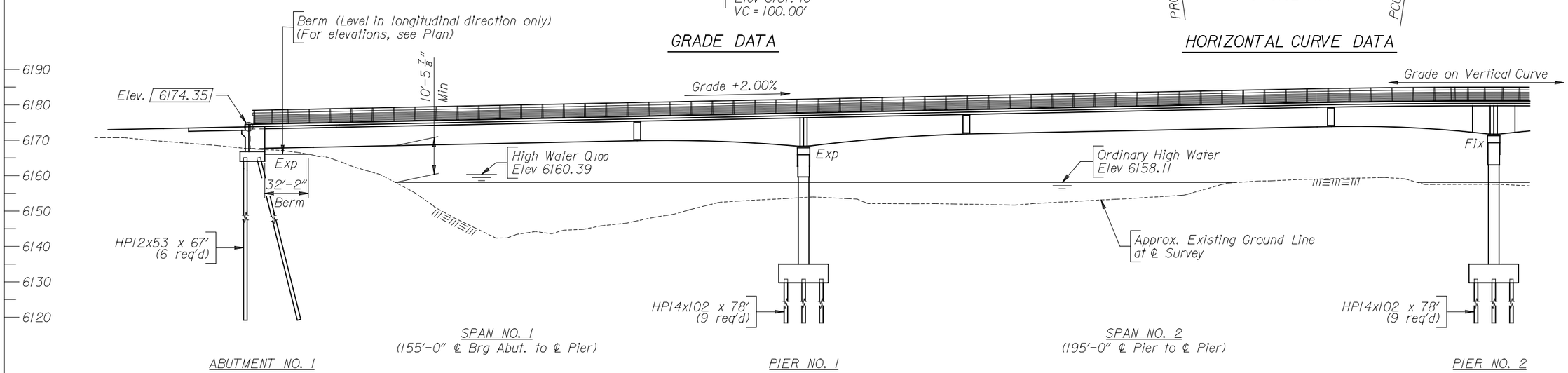

ELEVATION

(4 Continuous Composite Welded Plate Girder Spans)

Note: 1) Elevation shown as 6174.35 indicates finished grade at rear face abutment on ℄ Bridge Pathway.
2) For Sections A-A, B-B and C-C, see Sheet No. 6.
3) Grading shown for information only. See Civil Plans for grading information at abutments and piers.

HNTB

DRAWING TITLE
GENERAL PLAN AND ELEVATION
PATHWAY 22 OVER SNAKE RIVER
STA. 30+38.71

REVISIONS

DRAWING NO 4
JOB NO 10-124-02
DATE 1/9/13

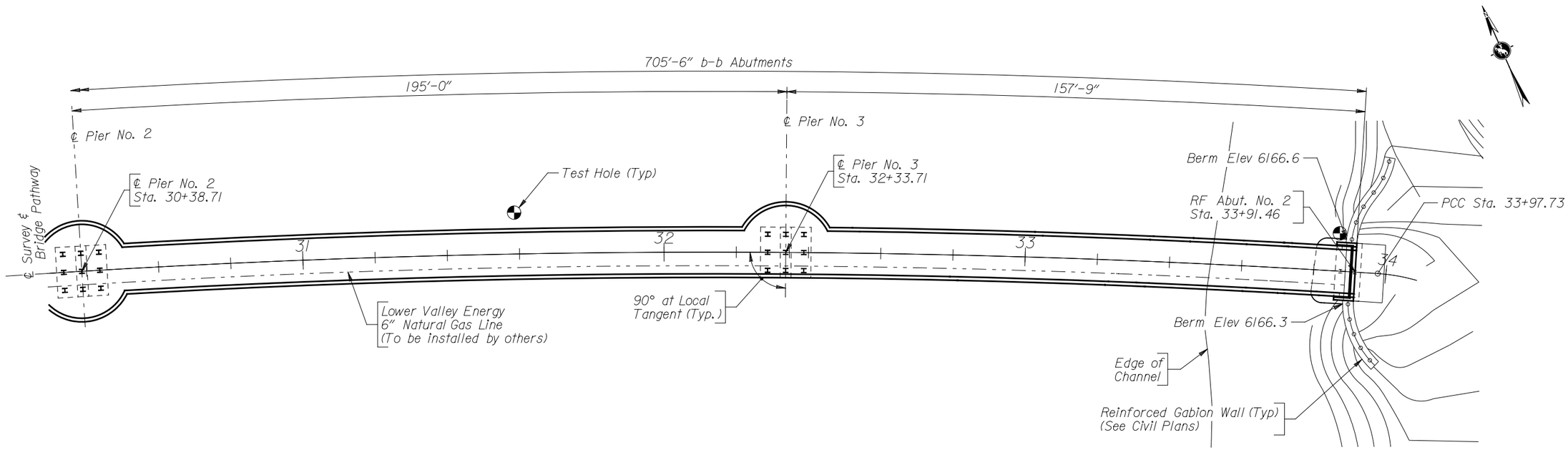

PLAN

(Longitudinal dimensions are along ℄ Survey.)

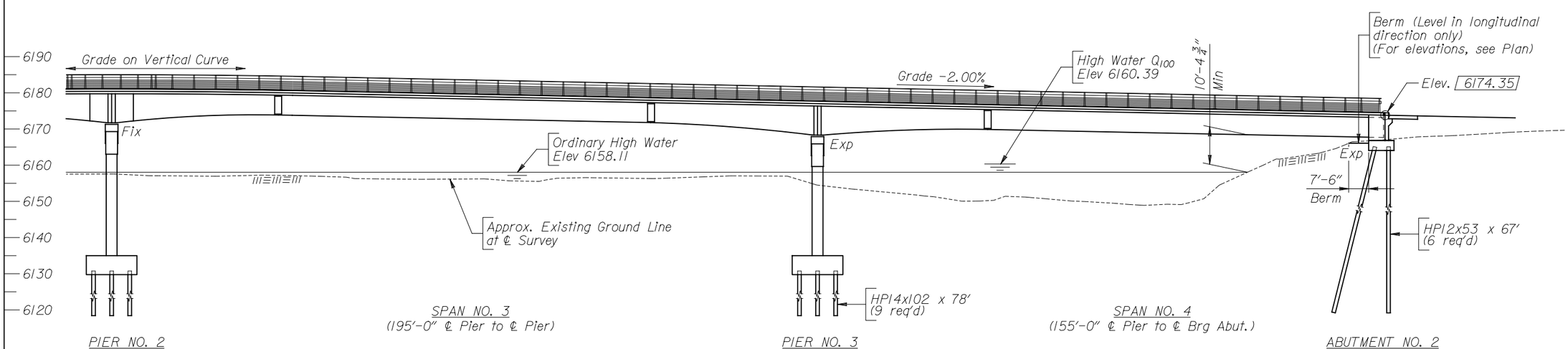

ELEVATION

(4 Continuous Composite Welded Plate Girder Spans)

Note: 1) Elevation shown as 6174.35 indicates finished grade at rear face abutment on ℄ Bridge Pathway.
2) Grading shown for information only. See Civil Plans for grading information at abutments and piers.

DRAWING TITLE
GENERAL PLAN AND ELEVATION
PATHWAY 22 OVER SNAKE RIVER
STA. 30+38.71

REVISIONS

DRAWING NO 5
JOB NO 10-124-02
DATE 1/9/13

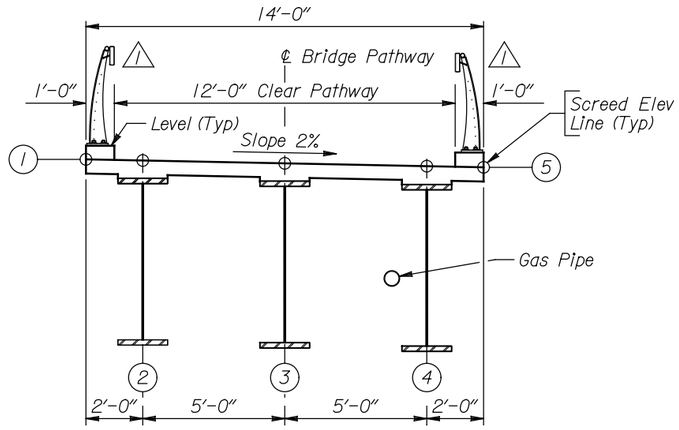

SECTION A-A

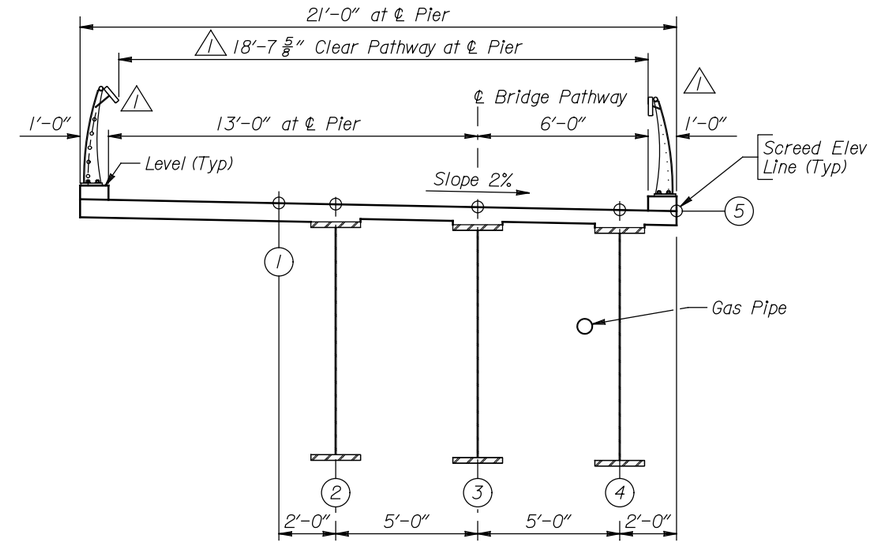

SECTION B-B

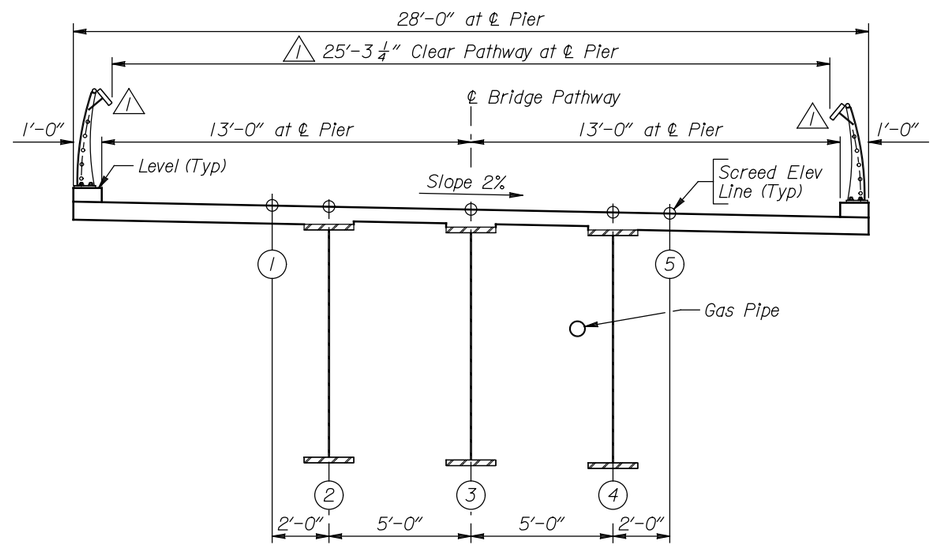

SECTION C-C

Note: 1) For location of Sections A-A, B-B and C-C, see Sheet No. 4

DRAWING TITLE
CROSS SECTIONS
PATHWAY 22 OVER SNAKE RIVER
STA. 30+38.71

REVISIONS
1 Revised Rail Height 8-29-13

DRAWING NO 6
JOB NO 10-124-02
DATE 1/9/13

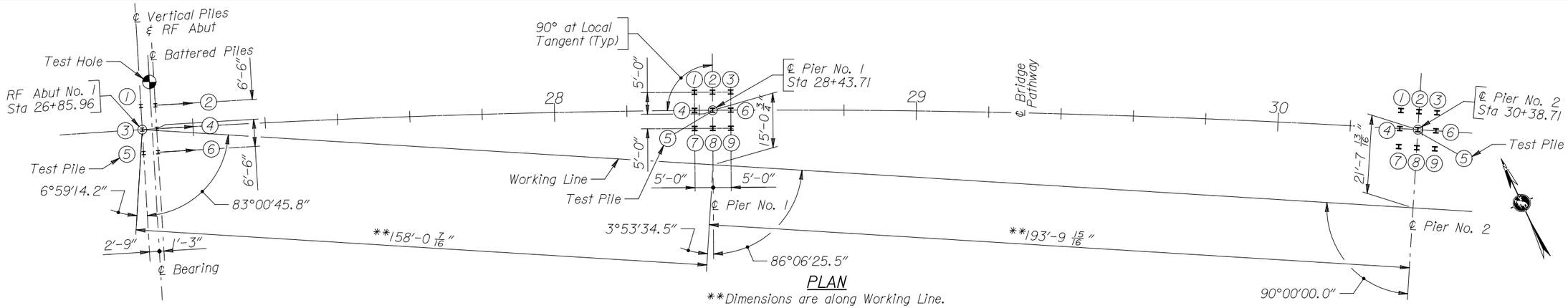

PLAN

**Dimensions are along Working Line.

*The piles at the piers shall have 55' minimum penetration into the soil.

SUBSTRUCTURE DATA				
Location	HP12x53 Pile Elevations		*HP14x102 Pile Elevations	
	① thru ⑥		① thru ⑨	
	Top	Bottom	Top	Bottom
Abut No. 1	6165.25	6098.25	---	---
Pier No. 1	---	---	6130.75	6052.75
Pier No. 2	---	---	6130.75	6052.75
Pier No. 3	---	---	6130.75	6052.75
Abut No. 2	6165.25	6098.25	---	---

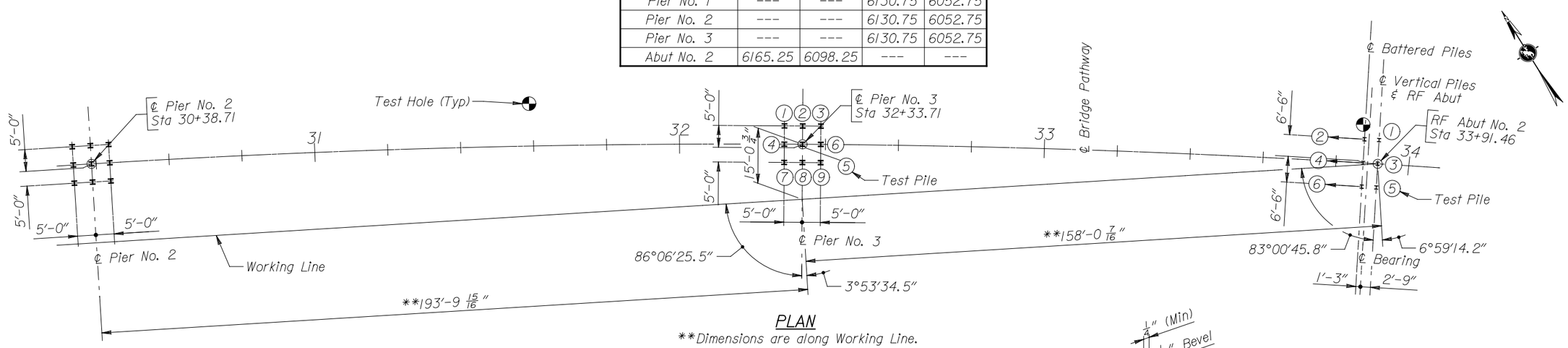

PLAN

**Dimensions are along Working Line.

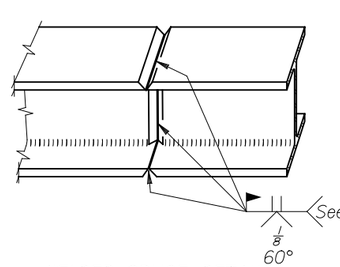

WELDED SPLICE DETAIL
(Piles welded horizontal)

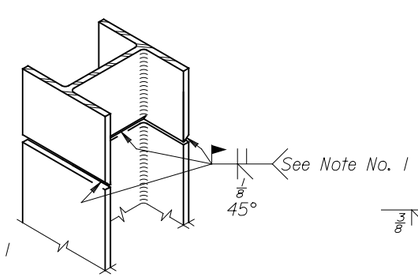

WELDED SPLICE DETAIL
(Piles welded vertical)

PILE SPLICE DETAILS

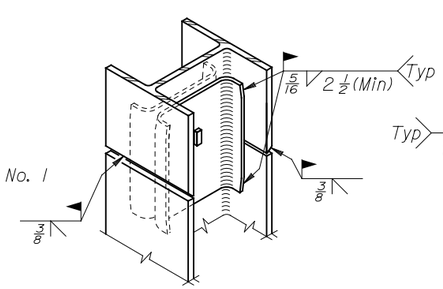

PILE SPLICER DETAIL
(Piles vertical or horizontal)

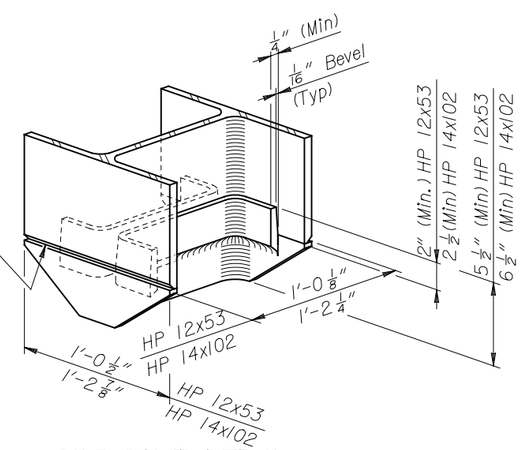

PILE POINT DETAIL
(12 required for HP 12x53)
(27 required for HP 14x89)

Note:
1) Gouge root to sound metal before welding second side.
2) Piles at Abutments 1 and 2 are HP 12x53 (Grade 50). Piles at Piers 1, 2, and 3 are HP 14x102 (Grade 50).
3) Pile Nos. ②, ④, and ⑥ at Abutments 1 and 2 are battered.
4) ⟵ Indicates direction of pile batter.

DRAWING TITLE
SUBSTRUCTURE LAYOUT
PATHWAY 22 OVER SNAKE RIVER
STA. 30+38.71

REVISIONS

DRAWING NO 7
JOB NO 10-124-02
DATE 1/9/13

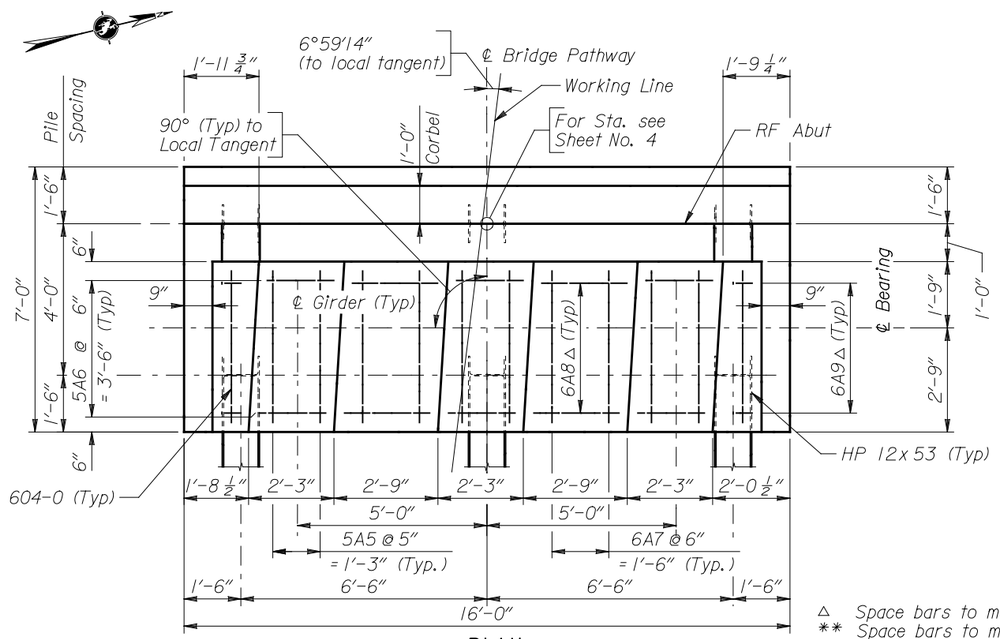

△ Space bars to match cap reinforcing.
** Space bars to miss opening for utility in backwall.

PLAN

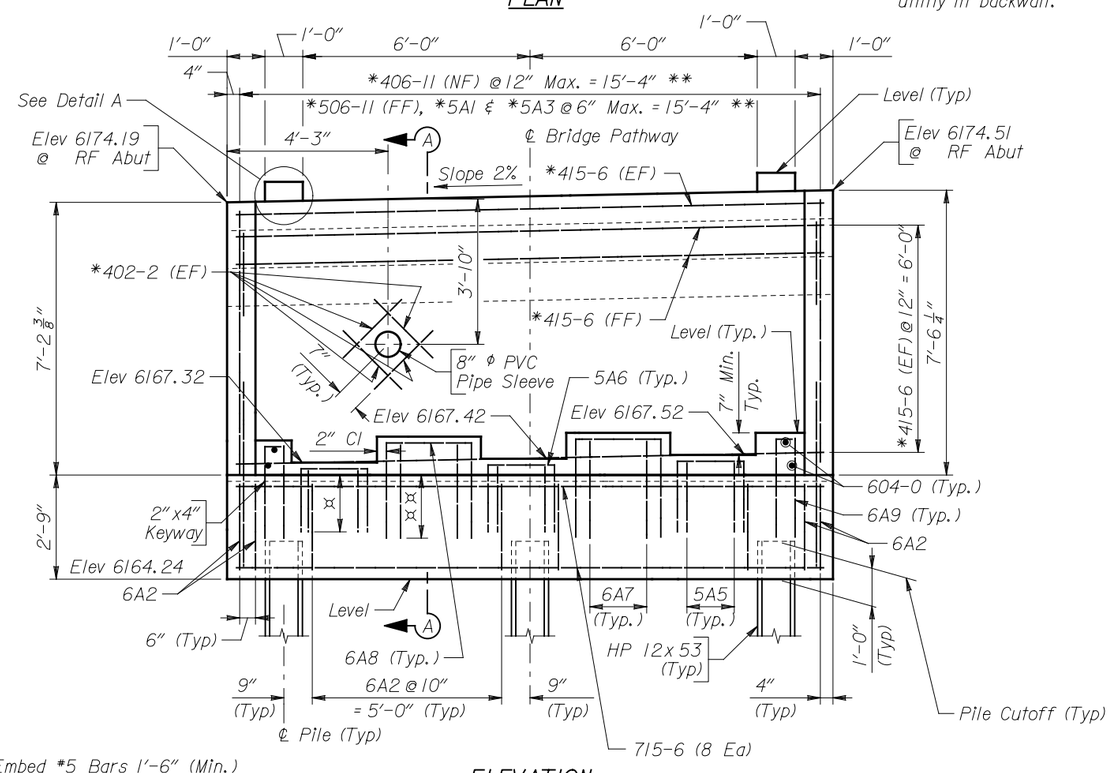

¤ Embed *5 Bars 1'-6" (Min.)
¤¤ Embed *6 Bars 1'-10" (Min.)

ELEVATION
(Looking back station)

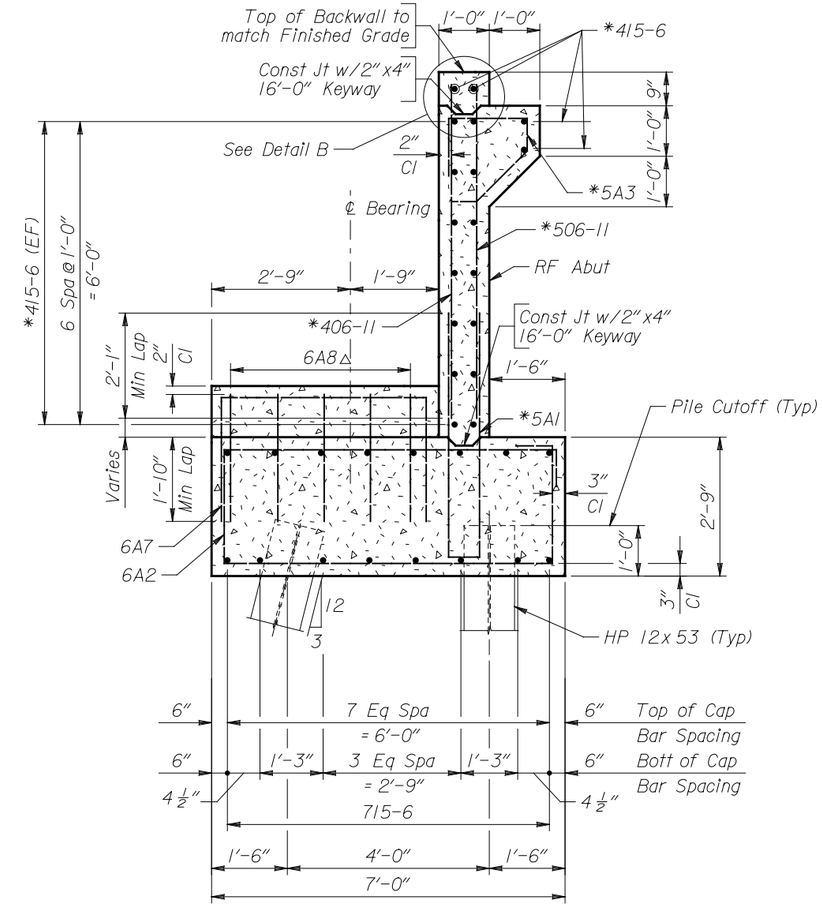

SECTION A-A

Note: 1) Place concrete above corbel after the slab.
2) PVC pipe sleeves shall be 1'-4" long and shall be anchored to the forms to prevent drifting during placement of concrete. The Bridge Contractor shall wrap the utility conduits with a precompressed joint membrane sealant where it passes thru the backwall. The cost of the PVC pipe and sealant is incidental to the cost of Class B concrete (STR).
3) For Detail A, Detail B, Maskwall Detail and Bill of Reinforcement, see Sheet No. 17.

HNTB

TETON COUNTY

DRAWING TITLE
ABUTMENT NO. 1 DETAILS
PATHWAY 22 OVER SNAKE RIVER
STA. 30+38.71

REVISIONS

DRAWING NO 16
JOB NO 10-124-02
DATE 1/9/13

BILL OF REINFORCEMENT

Location	Mark	Number Required
Cap	*404-4	14
	*5A1	32
	5A5	12
	5A6	24
	6A2	18
	6A7	8
	6A8	10
	6A9	10
	604-0	4
	715-6	16
	Weight	1614 LB
	*Weight	*397 LB
Backwall	*4A4	24
	*4A10	8
	*402-2	8
	*406-11	31
	*415-6	18
	*5A3	32
	*506-11	32
	*Weight	*873 LB

Bending Diagrams

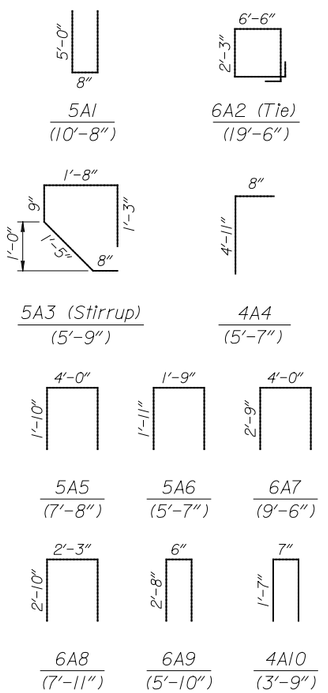

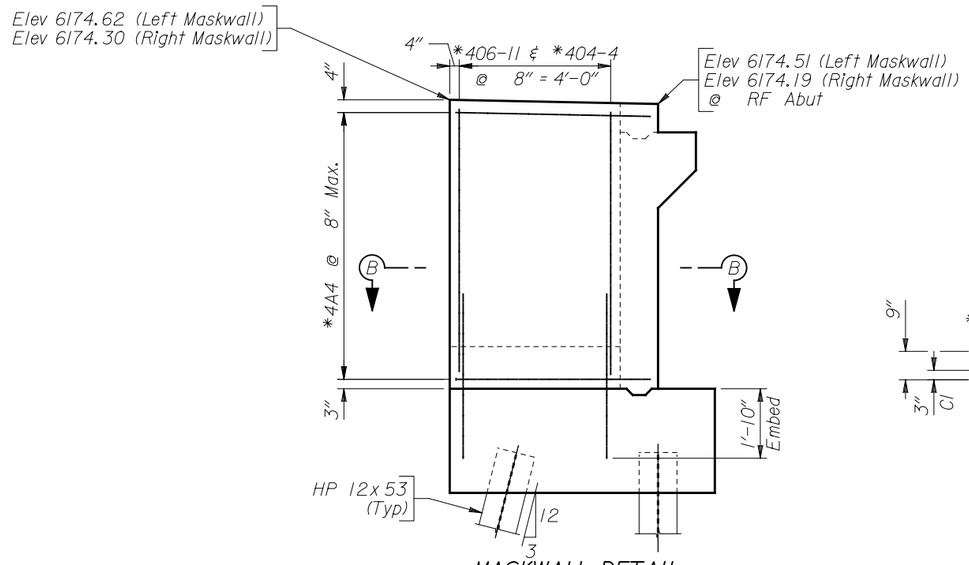

MASKWALL DETAIL

(Left Maskwall Shown Right Maskwall Similar)

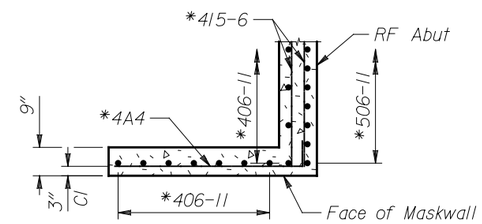

SECTION B-B

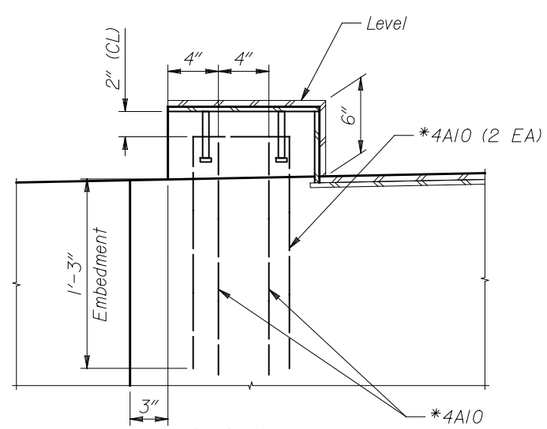

DETAIL A

(Backwall reinforcing not shown)

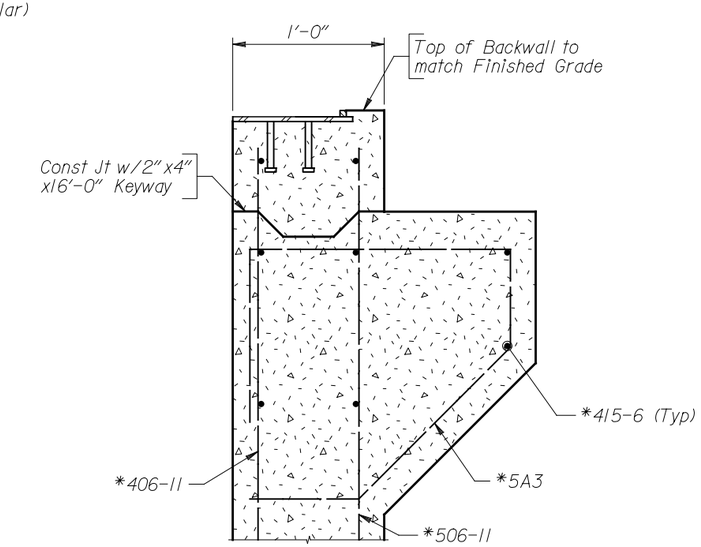

DETAIL B

Note: 1) For expansion joint details see Sheet No. 35.
2) For location of Detail A and Detail B see Sheet No. 16.
3) Place concrete above corbel after the slab concrete is placed.

DRAWING TITLE
ABUTMENT NO. 1 DETAILS
PATHWAY 22 OVER SNAKE RIVER
STA. 30+38.71

REVISIONS

DRAWING NO 17
JOB NO 10-124-02
DATE 1/9/13

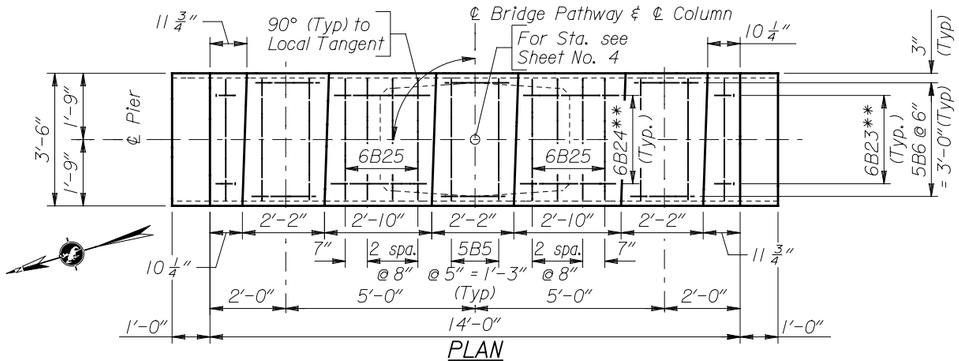

** Space bars to match cap reinforcing.

PLAN

(Pier 1 Shown Pier 3 Similar)

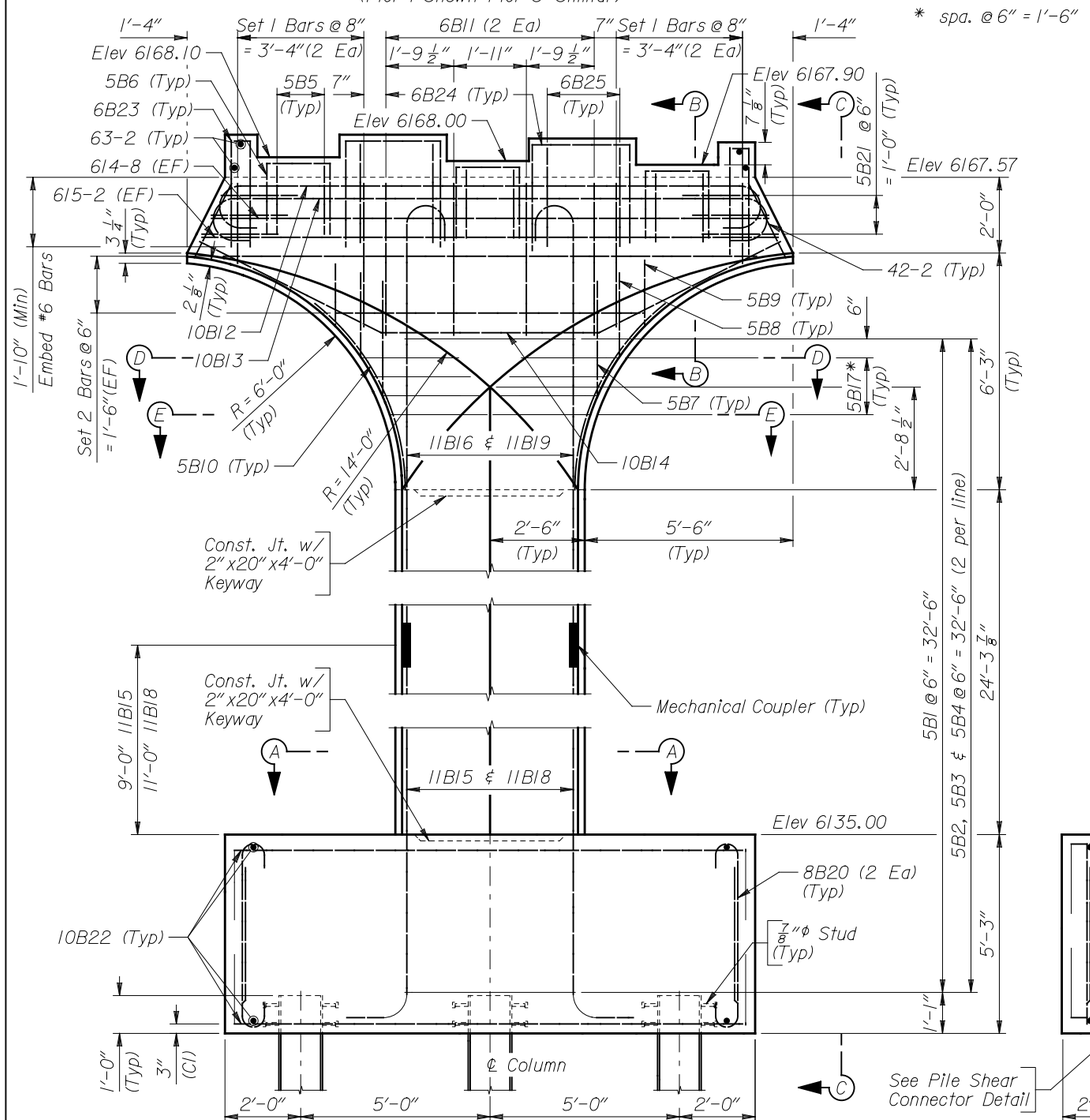

ELEVATION

(Pier 1 Shown Pier 3 Similar)

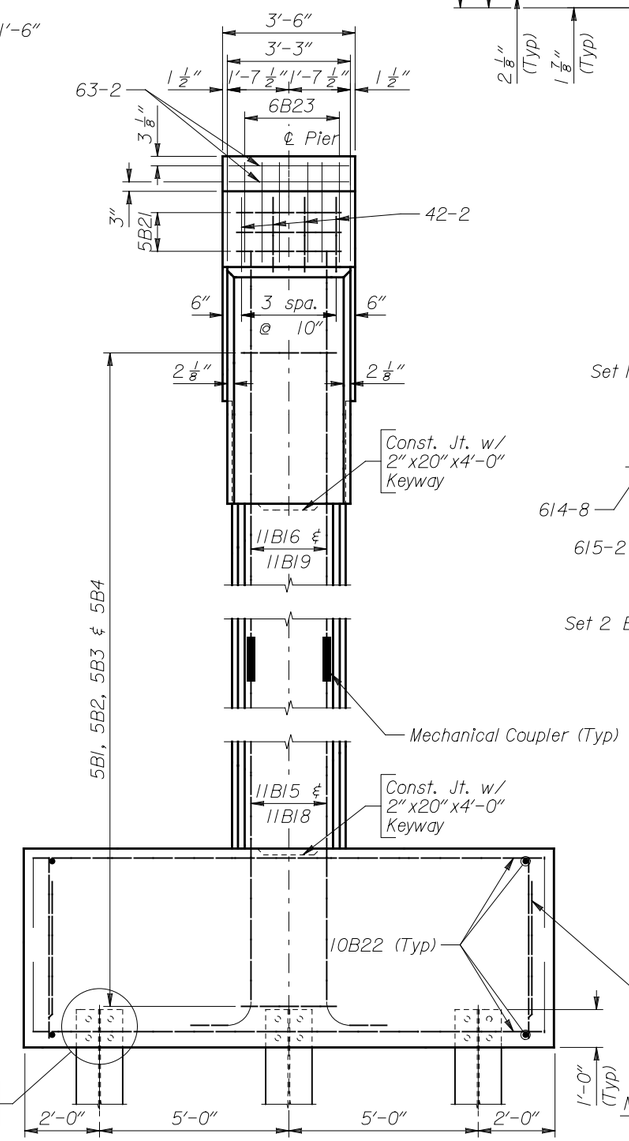

VIEW C-C

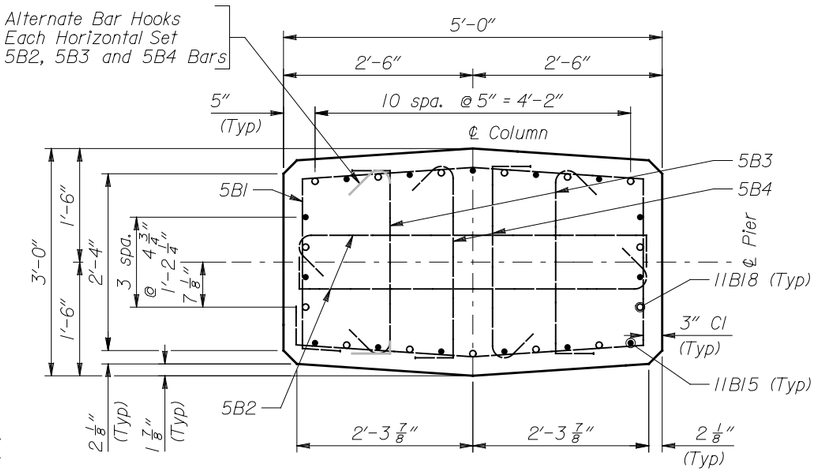

SECTION A-A

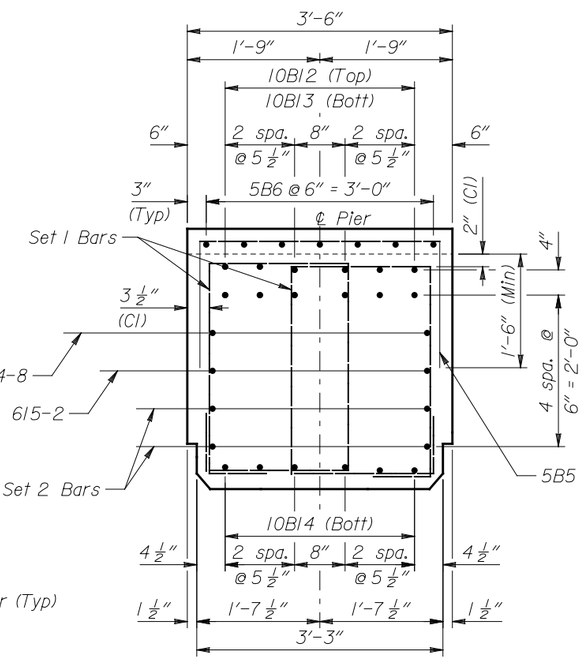

SECTION B-B

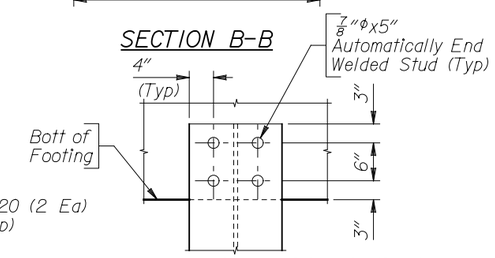

PILE SHEAR CONNECTOR DETAIL

(72 Studs Req'd per pier)

Note:
1) For Footing Detail, see Sheet No. 19.
2) Weld studs to piles after piles have been driven and after cutting off to the appropriate elevation.
3) For Sections D-D and E-E, see Sheet No. 19.
4) For Pier 3 Cap Details, see Sheet No. 19.

HNTB

DRAWING TITLE: PIER NO. 1 & 3 DETAILS

PATHWAY 22 OVER SNAKE RIVER

STA. 30+38.71

REVISIONS

DRAWING NO 18

JOB NO 10-124-02

DATE 1/9/13

BILL OF REINFORCEMENT

Location	Mark	Number Required
Cap	42-2	8
	5B5	12
	5B6	21
	5B7	2
	5B8	2
	5B9	2
	5B10	8
	5B17	8
	5B21	6
	6B11	8
	6B23	12
	6B24	12
	6B25	8
	63-2	4
	614-8	2
	615-2	2
	Set 1 Bars	4
	Set 2 Bars	2
	10B12	6
	10B13	6
	10B14	6
Column	5B1	66
	5B2	132
	5B3	132
	5B4	132
	11B15	15
	11B16	15
	11B18	15
	11B19	15
Footing	8B20	512
	10B22	64
Total weight for one Pier		23,720 LB

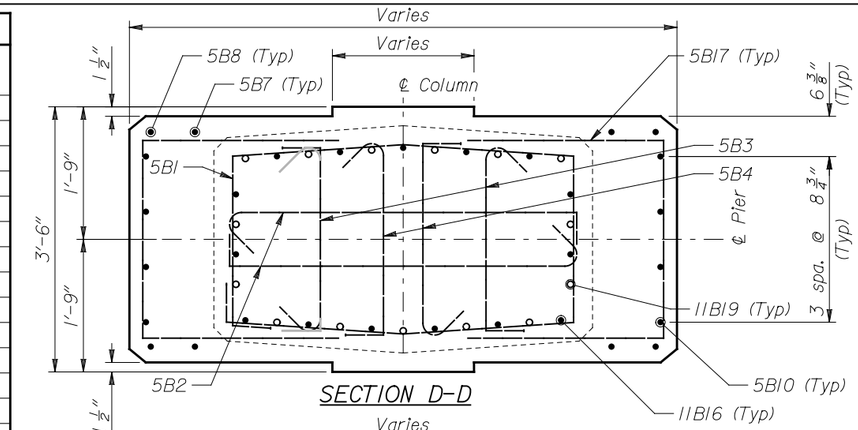

SECTION D-D

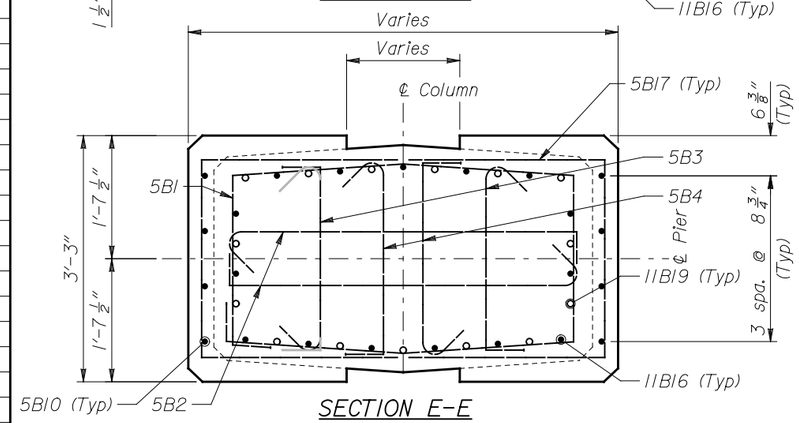

SECTION E-E

Note: Bill of reinforcement for one pier only.

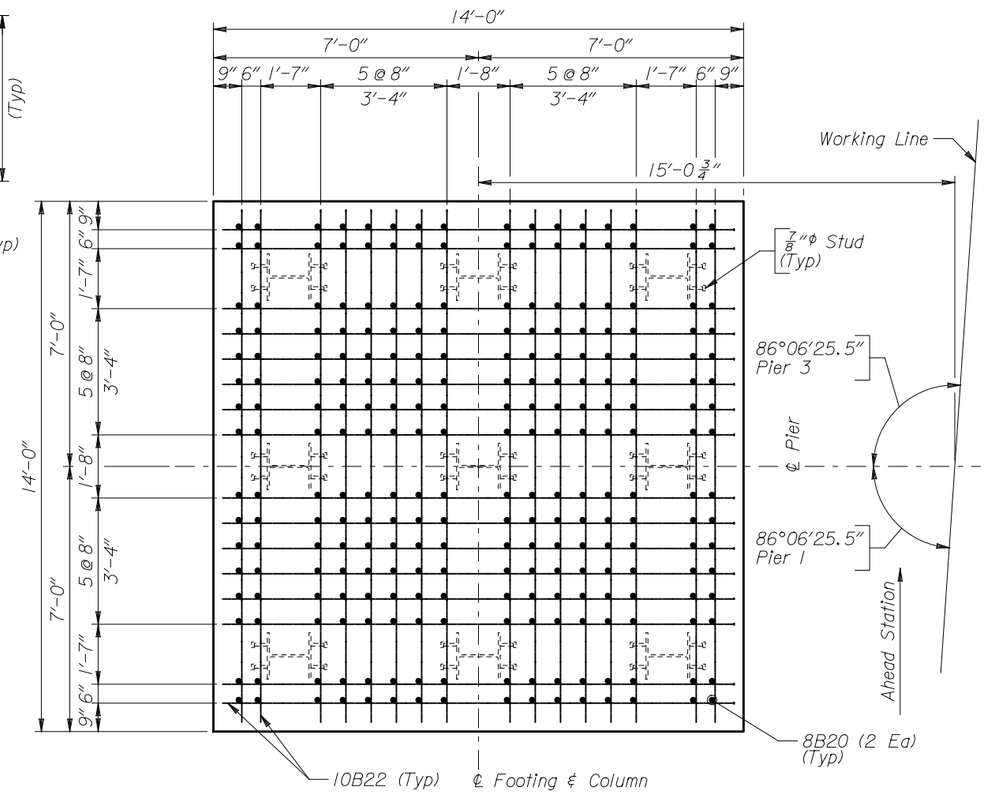

FOOTING DETAIL
(Pier 1 Shown Pier 3 Similar)

** Space bars to match cap reinforcing.

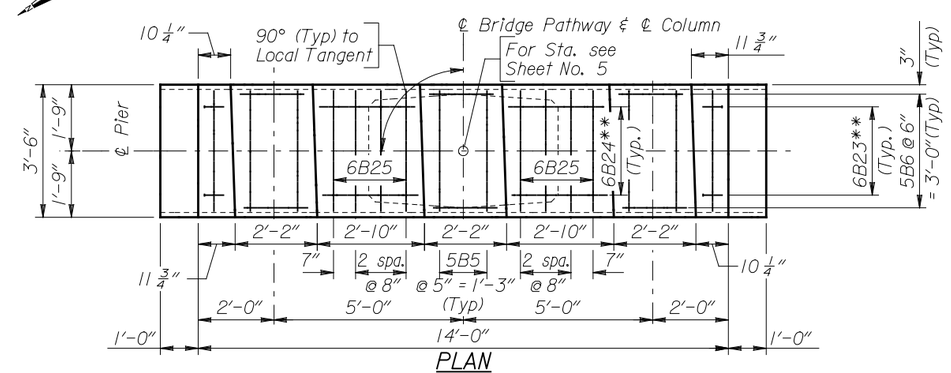

PLAN
(Pier 3 Shown)

Note: 1) For location of Sections D-D and E-E, see Sheet No. 18.

Bending Diagrams

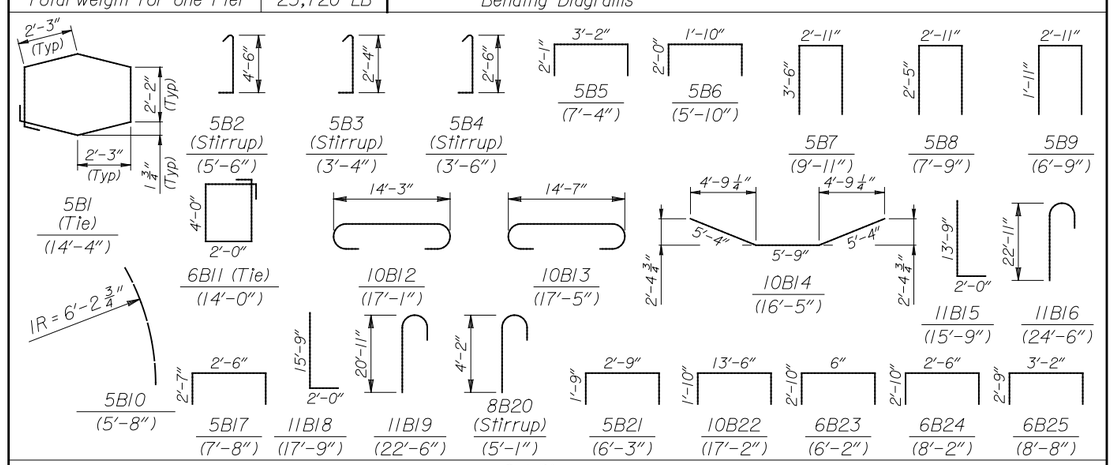

Set Diagrams

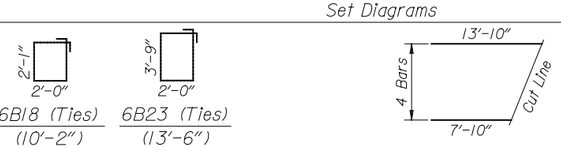

DRAWING TITLE
PIER NO. 1 & 3 DETAILS
PATHWAY 22 OVER SNAKE RIVER
STA. 30+38.71

REVISIONS

DRAWING NO 19
JOB NO 10-124-02
DATE 1/9/13

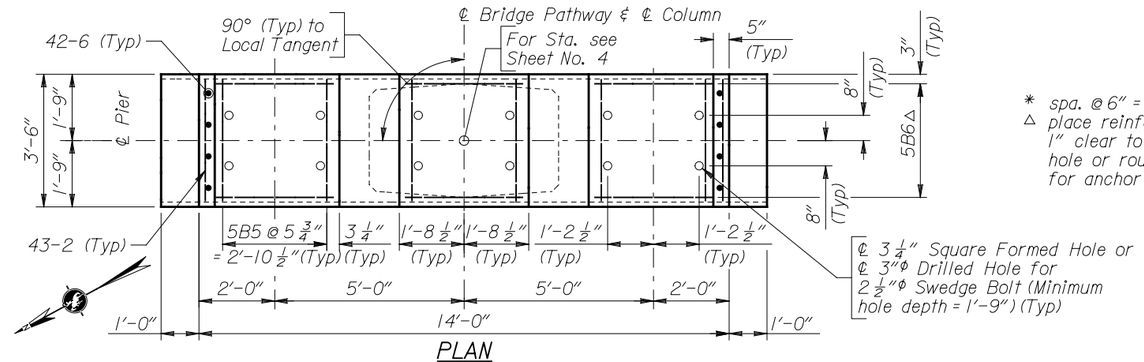

PLAN

* spa. @ 6" = 1'-6"
△ place reinforcing to provide 1" clear to square formed hole or round drilled hole for anchor bolts.

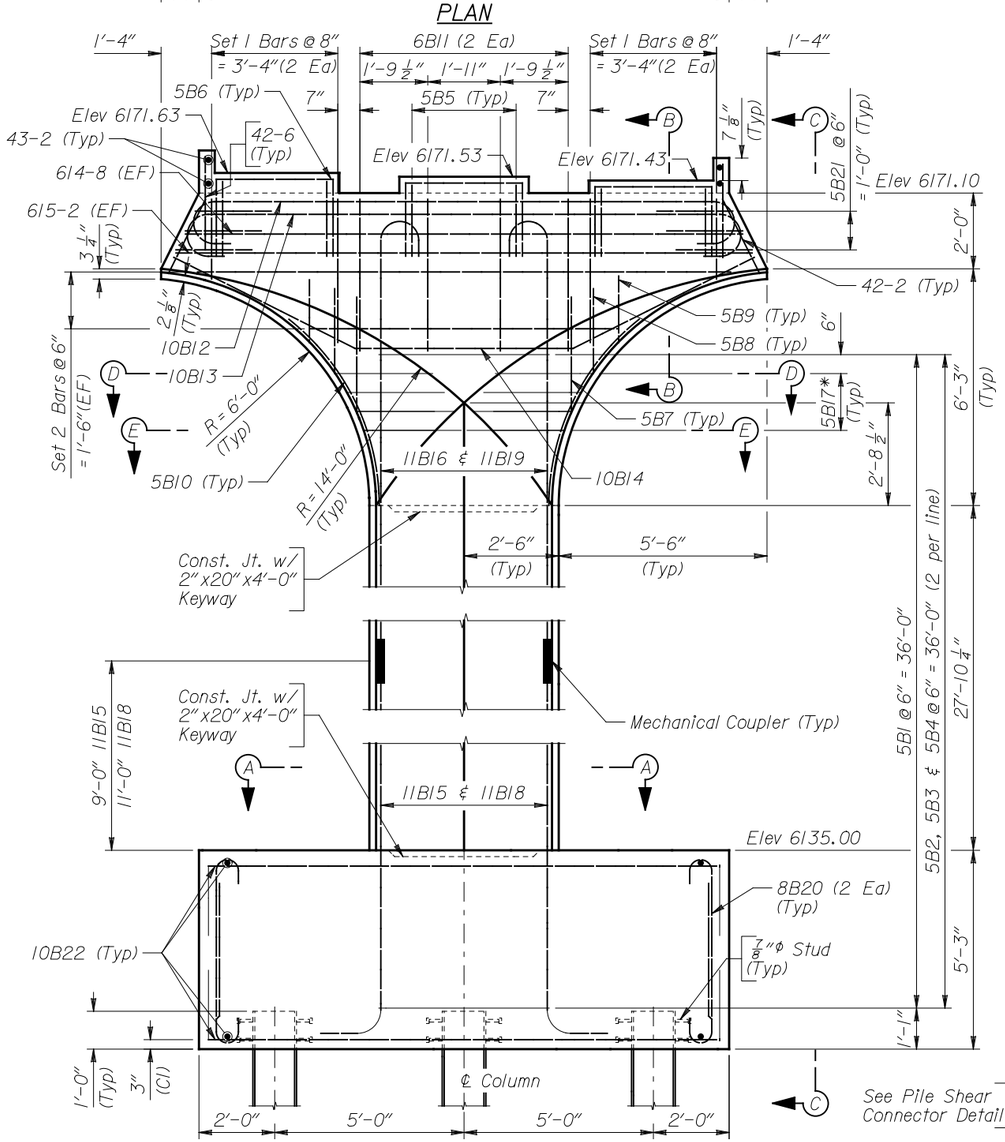

ELEVATION
(Looking Ahead Station)

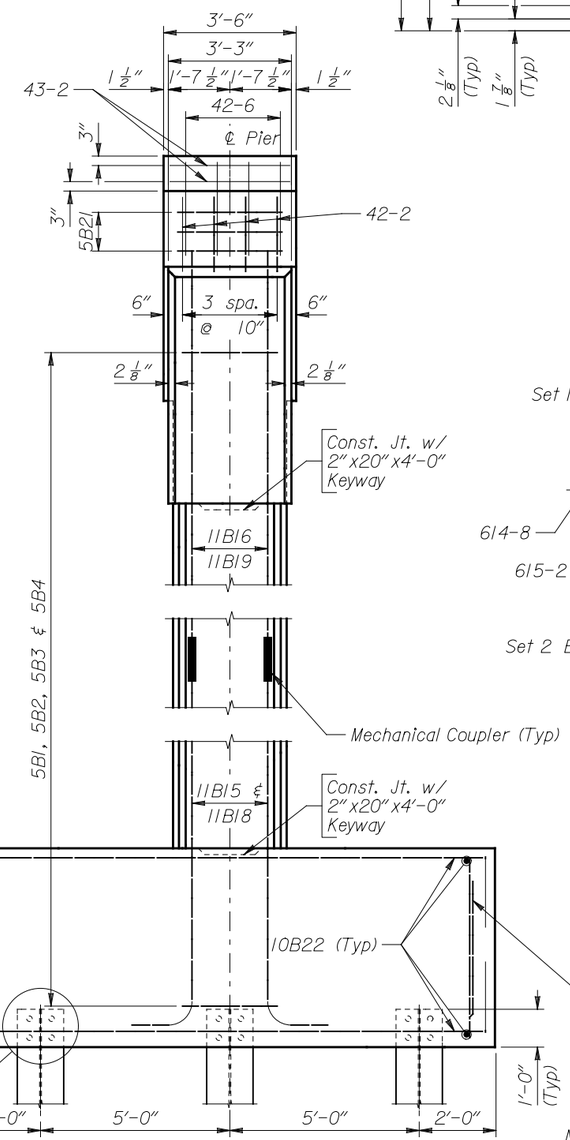

VIEW C-C

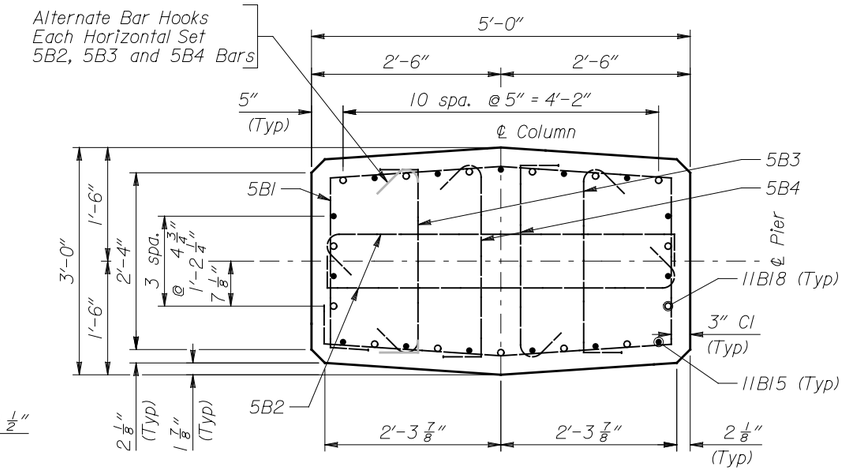

SECTION A-A

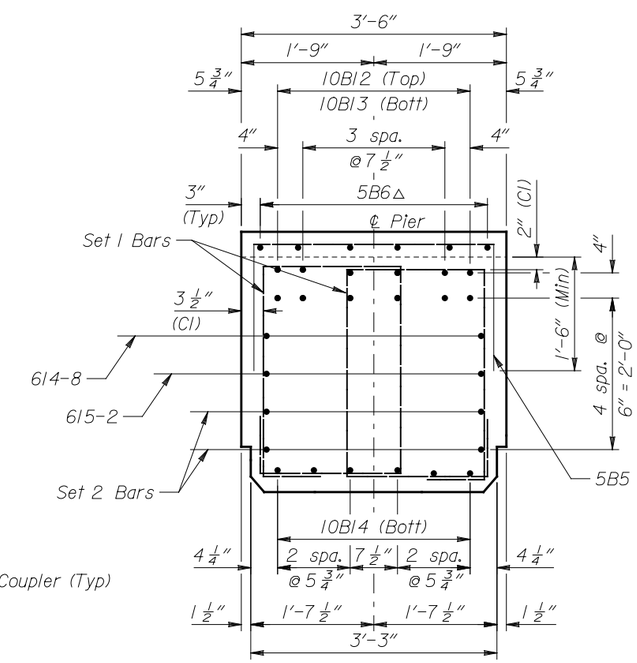

SECTION B-B

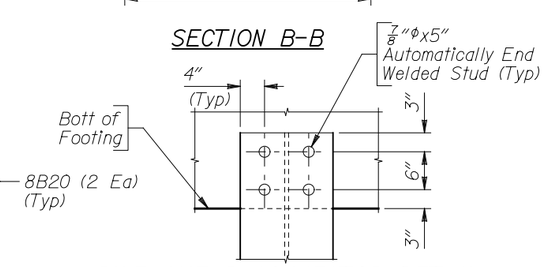

PILE SHEAR CONNECTOR DETAIL
(72 Studs Req'd)

Note: 1) For Footing Detail, see Sheet No. 21.
2) Weld studs to piles after piles have been driven and after cutting off to the appropriate elevation.
3) For Sections D-D and E-E, see Sheet No. 21.

HNTB

DRAWING TITLE
PIER NO. 2 DETAILS
PATHWAY 22 OVER SNAKE RIVER
STA. 30+38.71

REVISIONS

DRAWING NO 20
JOB NO 10-124-02
DATE 1/9/13

BILL OF REINFORCEMENT

Location	Mark	Number Required
Cap	42-2	8
	42-6	8
	43-2	4
	5B5	21
	5B6	18
	5B7	2
	5B8	2
	5B9	2
	5B10	8
	5B17	8
	5B21	6
	6B11	8
	614-8	2
	615-2	2
	Set 1 Bars	4
	Set 2 Bars	2
	10B12	6
	10B13	6
	10B14	6
Column	5B1	73
	5B2	146
	5B3	146
	5B4	146
	11B15	15
	11B16	15
	11B18	15
	11B19	15
Footing	8B20	512
	10B22	64
Total weight		24,264 LB

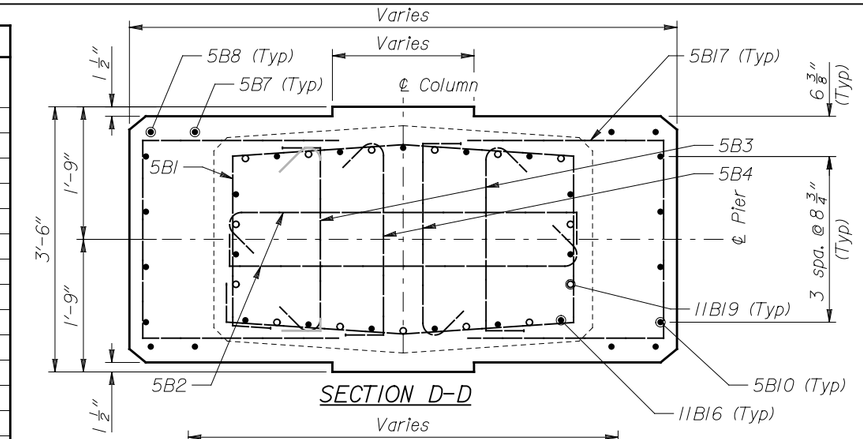

SECTION D-D

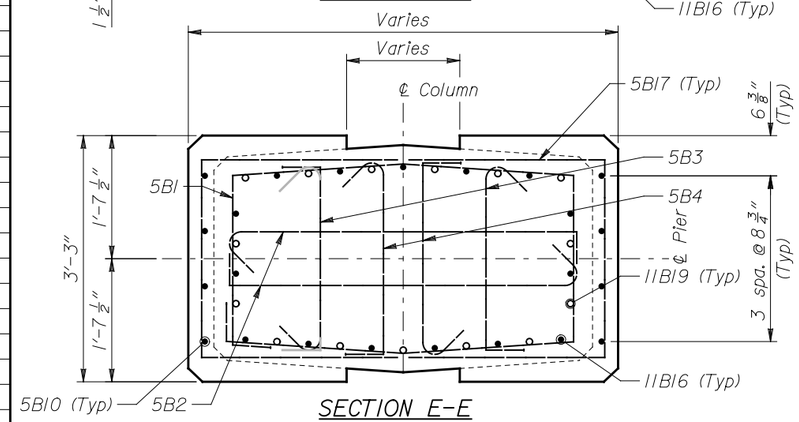

SECTION E-E

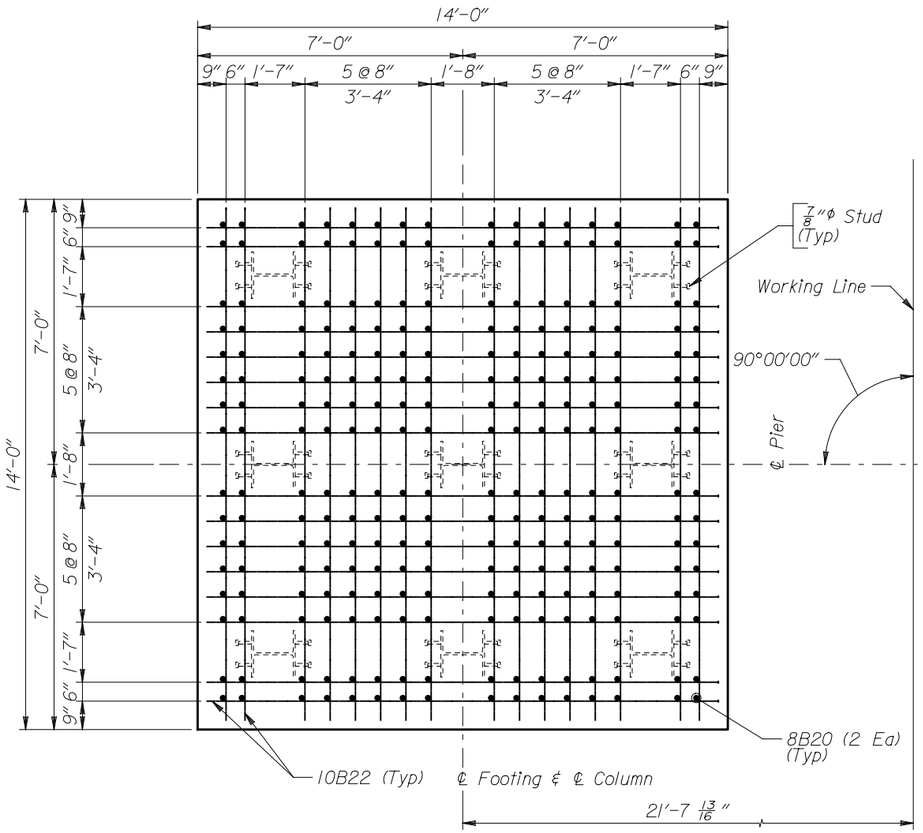

FOOTING DETAIL

Bending Diagrams

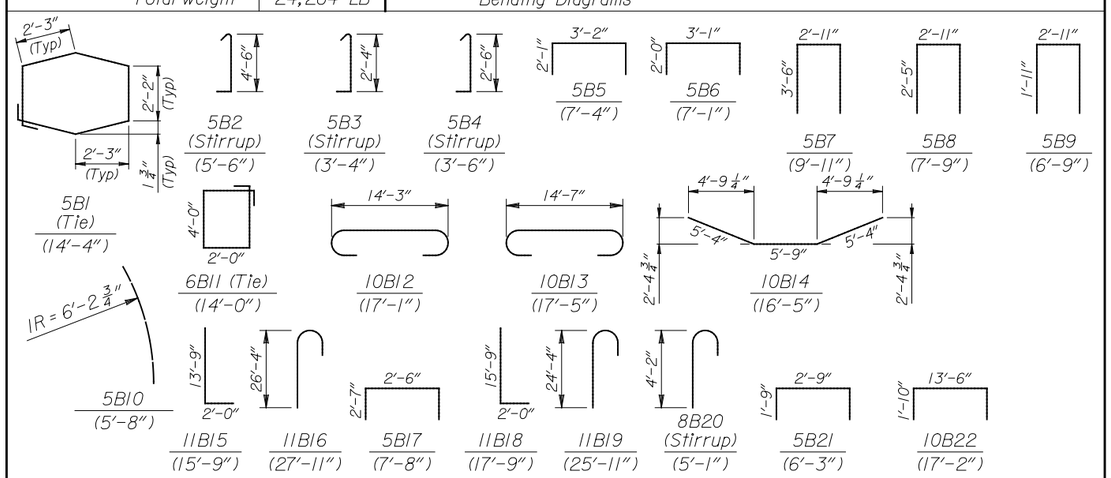

Set Diagrams

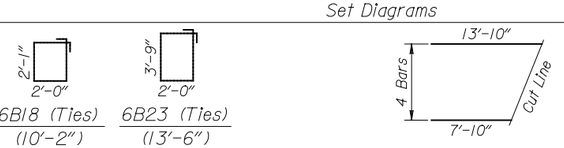

Set 1 Bars (6 bars per set) (Avg length = 11'-10")

Set 2 Bars (No. 6 Bars) (Avg length = 10'-10")

Note: 1) For location of Sections D-D and E-E, see Sheet No. 20.

DRAWING TITLE
PIER NO. 2 DETAILS
PATHWAY 22 OVER SNAKE RIVER
STA. 30+38.71

REVISIONS

DRAWING NO 21
JOB NO 10-124-02
DATE 1/9/13

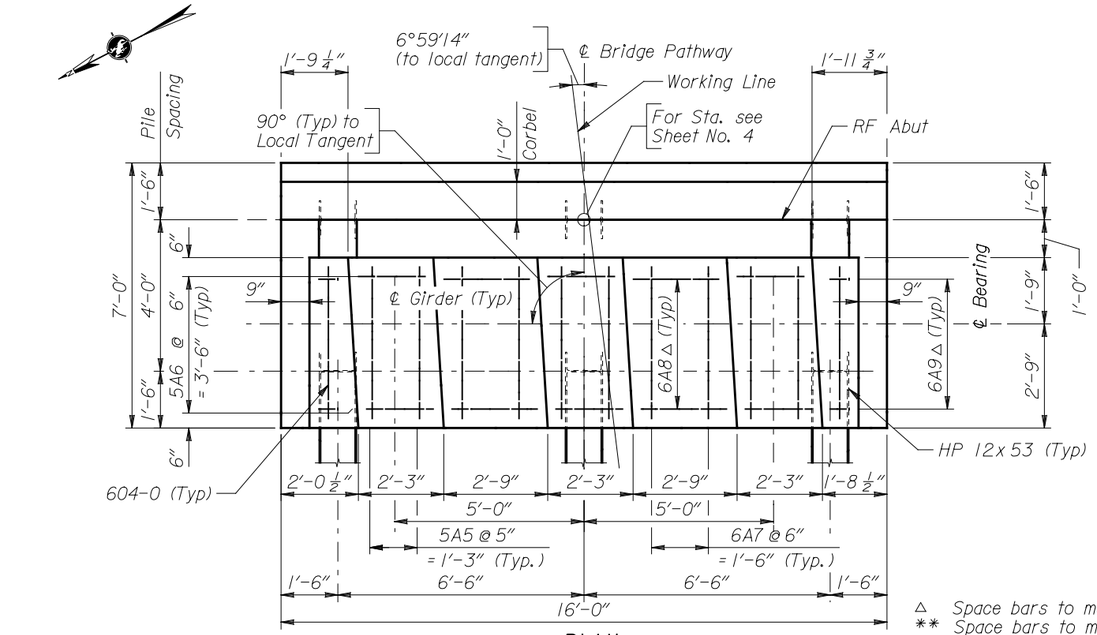

△ Space bars to match cap reinforcing.
** Space bars to miss opening for utility in backwall.

PLAN

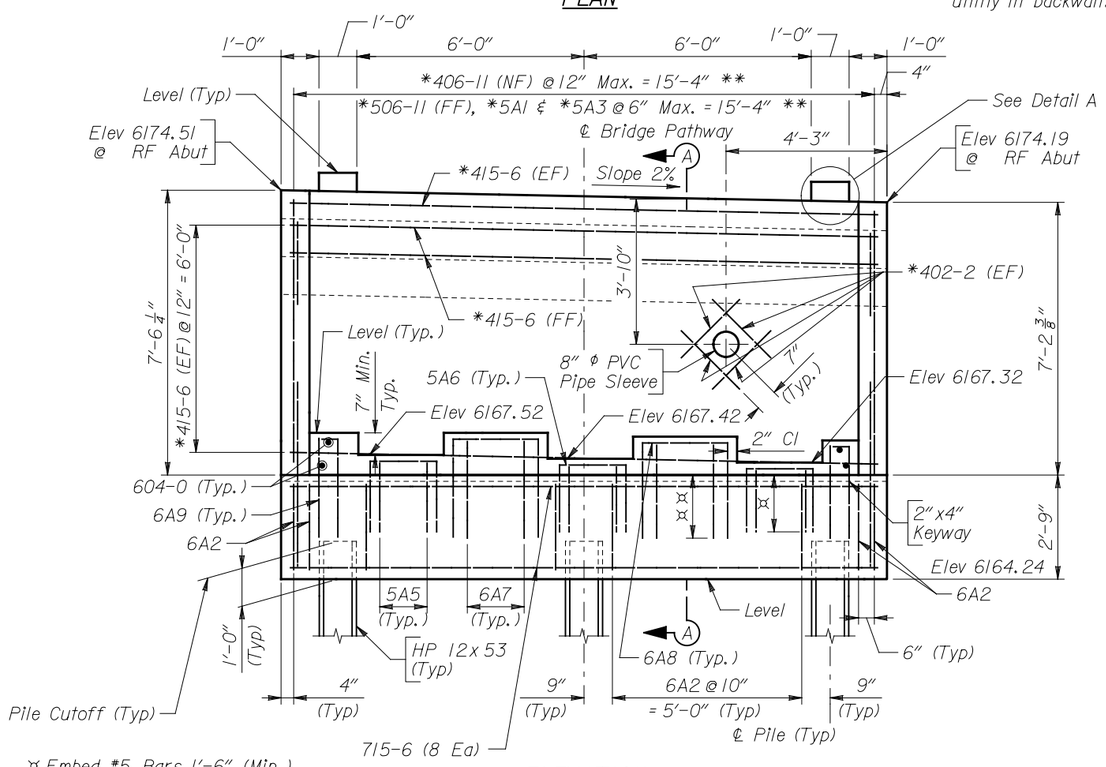

¤ Embed *5 Bars 1'-6" (Min.)
¤¤ Embed *6 Bars 1'-10" (Min.)

ELEVATION
(Looking ahead station)

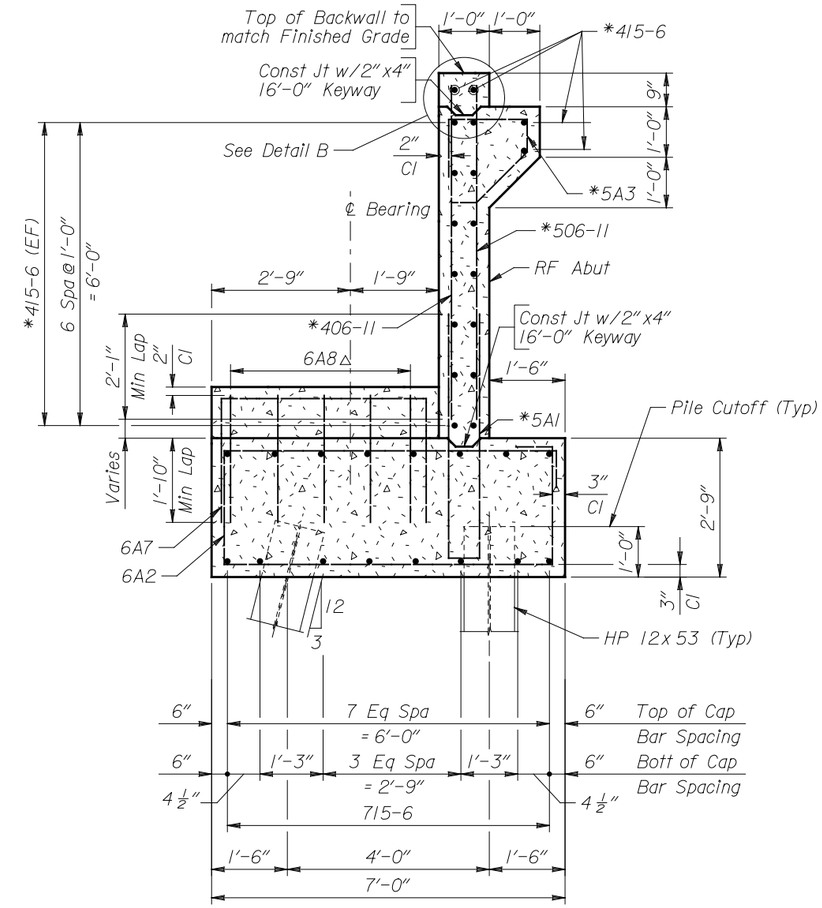

SECTION A-A

Note: 1) Place concrete above corbel after the slab.
2) PVC pipe sleeves shall be 1'-4" long and shall be anchored to the forms to prevent drifting during placement of concrete. The Bridge Contractor shall wrap the utility conduits with a precompressed joint membrane sealant where it passes thru the backwall. The cost of the PVC pipe and sealant is incidental to the cost of Class B concrete (STR).
3) For Detail A, Detail B, Maskwall Detail and Bill of Reinforcement, see Sheet No. 23.

HNTB

TETON COUNTY

DRAWING TITLE
ABUTMENT NO. 2 DETAILS
PATHWAY 22 OVER SNAKE RIVER
STA. 30+38.71

REVISIONS

DRAWING NO 22
JOB NO 10-124-02
DATE 1/9/13

BILL OF REINFORCEMENT

Location	Mark	Number Required
Cap	*404-4	14
	*5A1	32
	5A5	12
	5A6	24
	6A2	18
	6A7	8
	6A8	10
	6A9	10
	604-0	4
	715-6	16
	Weight	1614 LB
	*Weight	*397 LB
Backwall	*4A4	24
	*4A10	8
	*402-2	8
	*406-11	31
	*415-6	18
	*5A3	32
	*506-11	32
	*Weight	*873 LB

Bending Diagrams

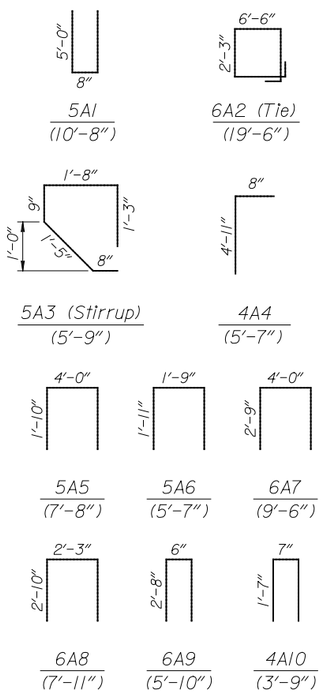

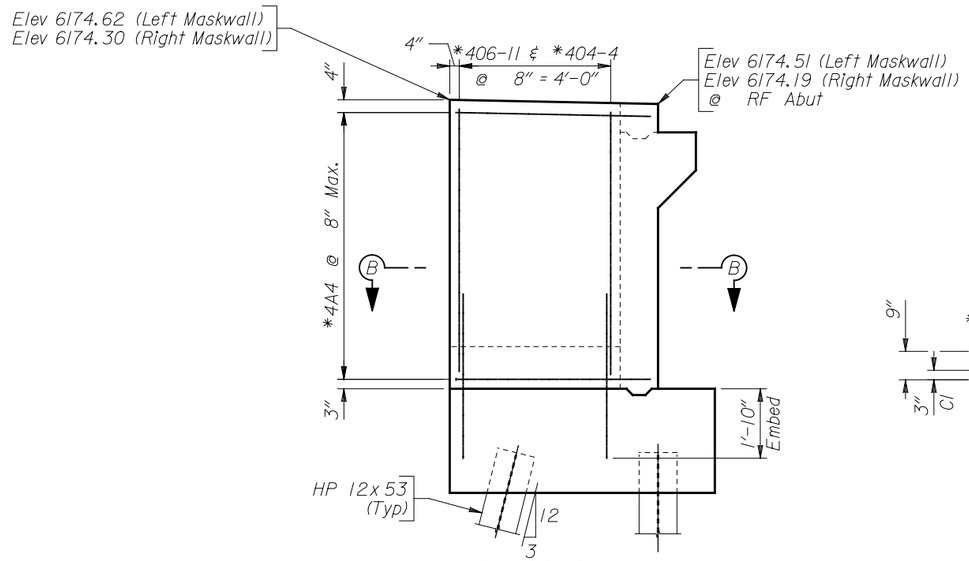

MASKWALL DETAIL
(Right Maskwall Shown Left Maskwall Similar)

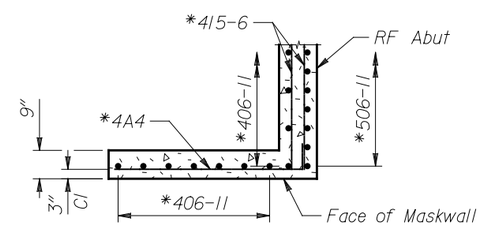

SECTION B-B

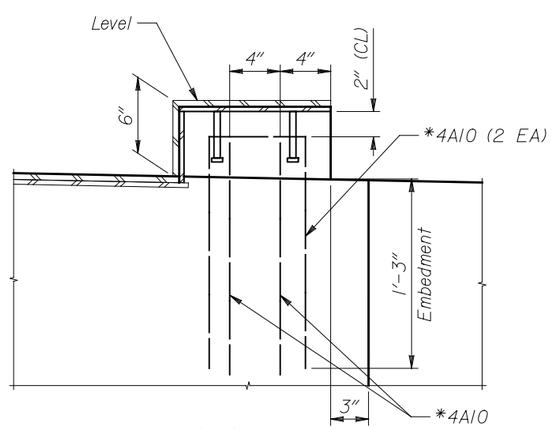

DETAIL A
(Backwall reinforcing not shown)

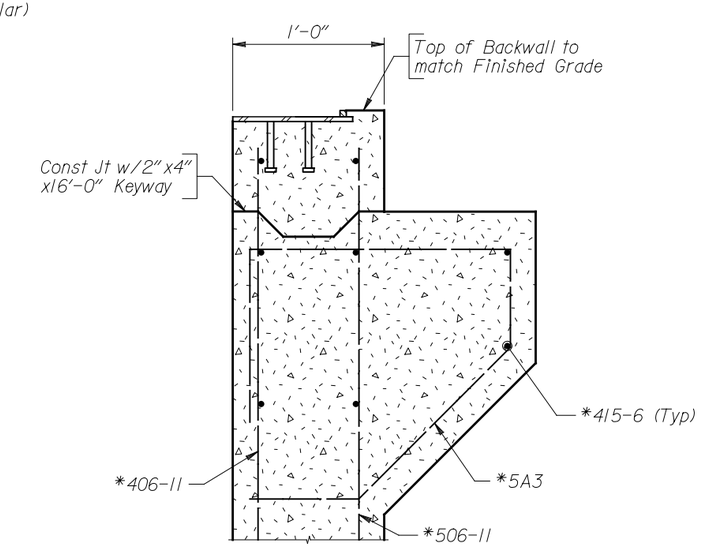

DETAIL B

Note: 1) For expansion joint details see Sheet No. 35.
2) For location of Detail A and Detail B see Sheet No. 22.
3) Place concrete above corbel after the slab concrete is placed.

DRAWING TITLE
ABUTMENT NO. 2 DETAILS
PATHWAY 22 OVER SNAKE RIVER
STA. 30+38.71

REVISIONS

DRAWING NO 23
JOB NO 10-124-02
DATE 1/9/13

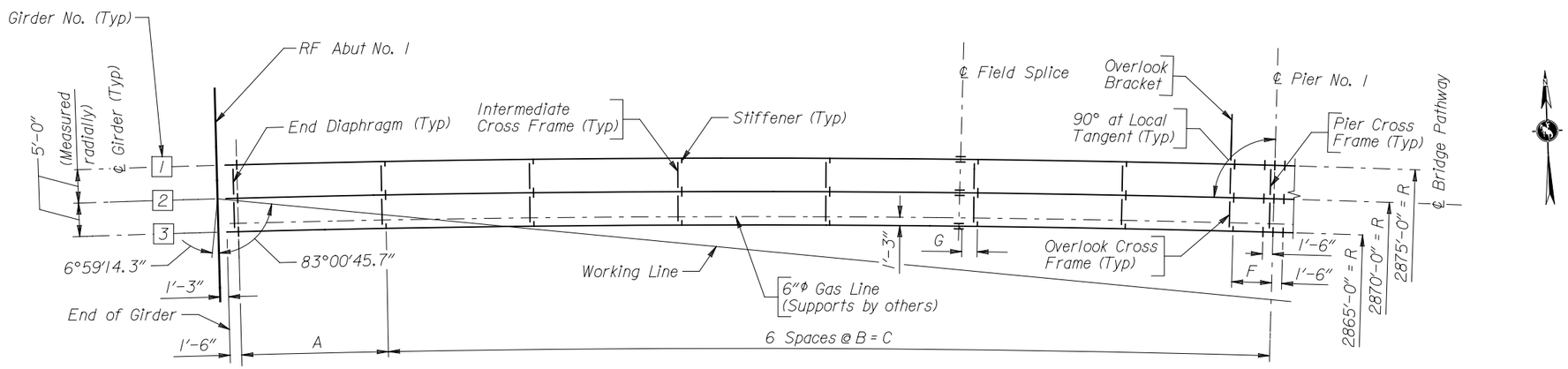

FRAMING PLAN

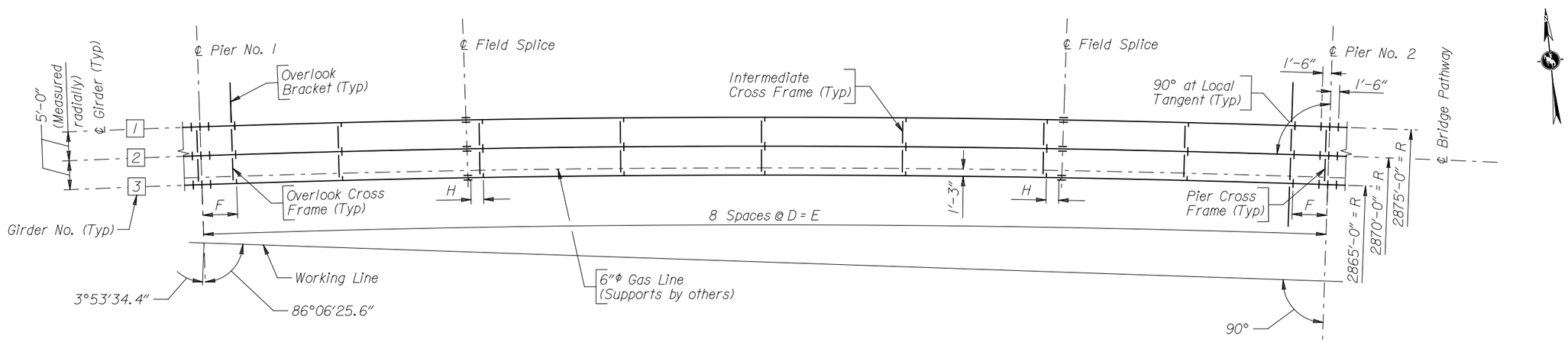

FRAMING PLAN

GIRDER DIMENSION TABLE								
Girder	A	B	C	D	E	F	G	H
1	22'-1 15/16"	22'-2 3/16"	133'-1 5/16"	24'-5"	195'-4 1/16"	6'-0 1/8"	2'-7 5/8"	2'-10"
2	22'-1 1/2"	22'-1 3/4"	132'-10 1/2"	24'-4 1/2"	195'-0"	6'-0"	2'-8 1/2"	2'-9"
3	22'-1 1/16"	22'-1 5/16"	132'-7 11/16"	24'-4"	194'-7 15/16"	5'-11 7/8"	2'-9 3/8"	2'-8"

Note: 1) For Girder Elevation, see Sheet No. 26.
2) For Cross Frame Details and Stiffener Details, see Sheet No. 29.
3) For Field Splice Details, see Sheet No. 32.
4) For Overlook Bracket Details, see Sheet No. 30.

DRAWING TITLE
SUPERSTRUCTURE DETAILS
PATHWAY 22 OVER SNAKE RIVER
STA. 30+38.71

REVISIONS

DRAWING NO 24
JOB NO 10-124-02
DATE 1/9/13

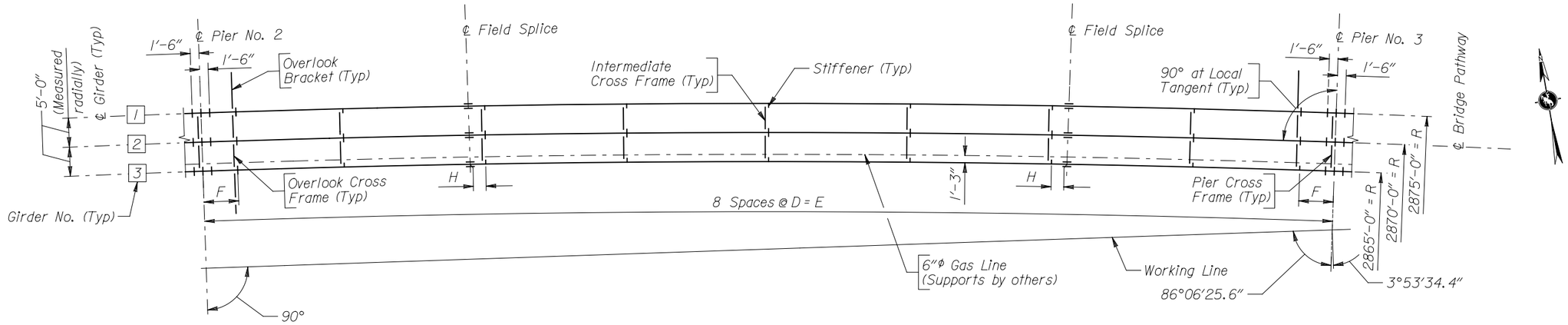

FRAMING PLAN

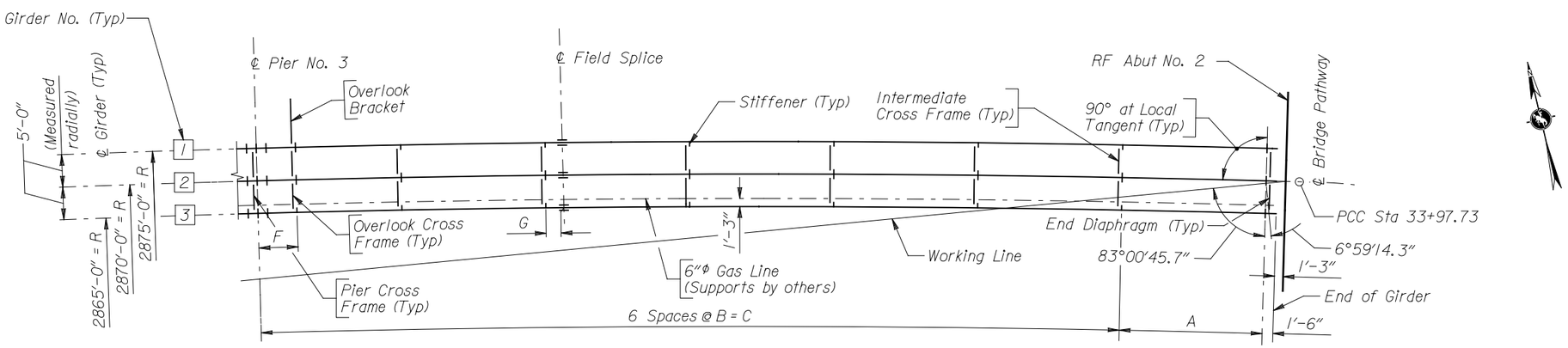

FRAMING PLAN

Note: 1) For notes and Girder Dimension Table, see Sheet No. 24.

DRAWING TITLE
SUPERSTRUCTURE DETAILS
PATHWAY 22 OVER SNAKE RIVER
STA. 30+38.71

REVISIONS

DRAWING NO 25
JOB NO 10-124-02
DATE 1/9/13

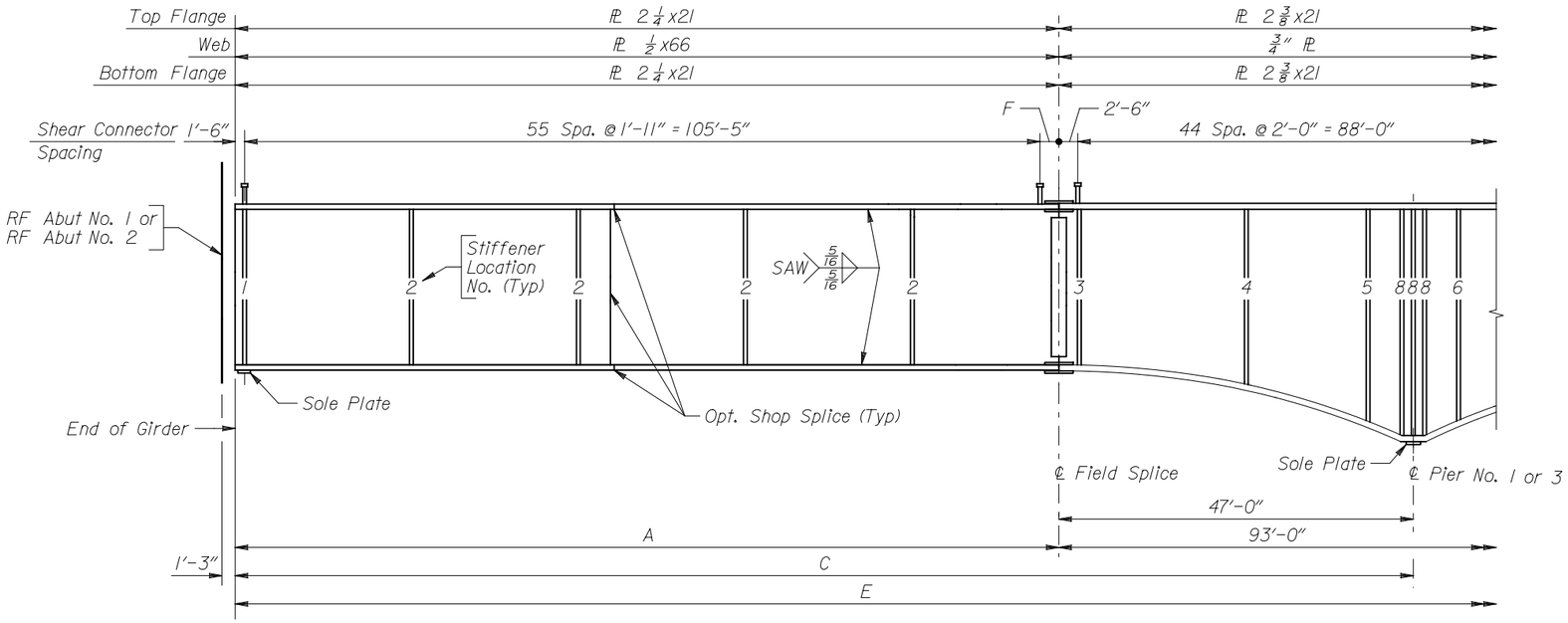

GIRDER ELEVATION

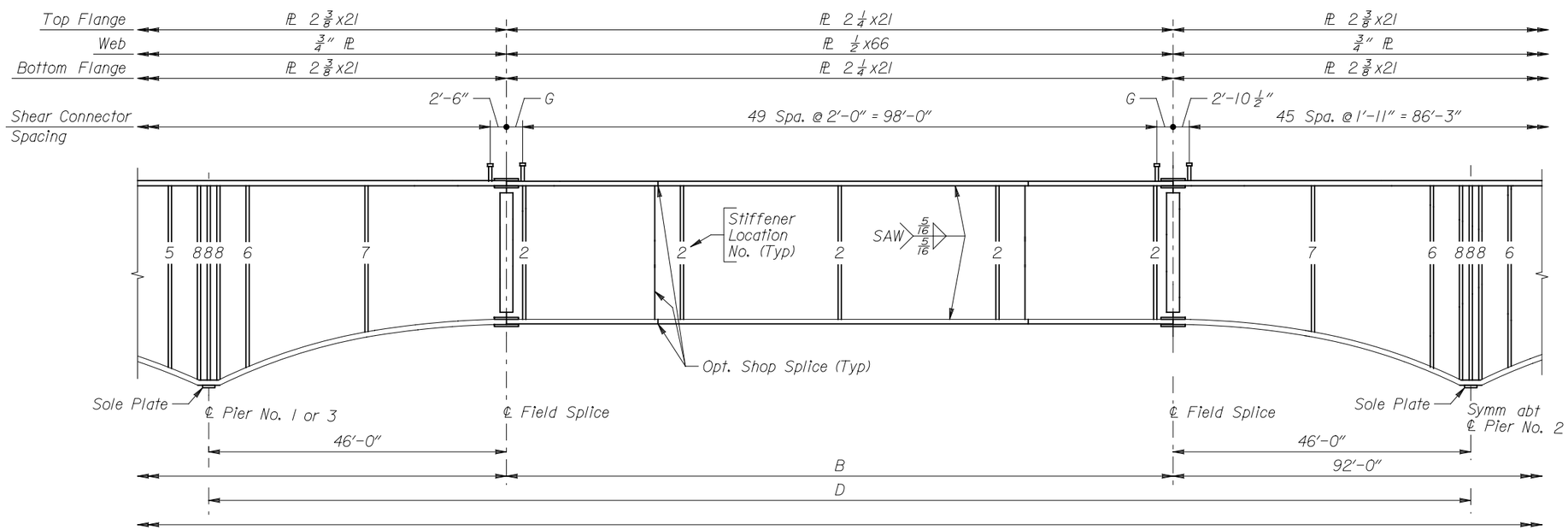

GIRDER ELEVATION

GIRDER DIMENSION TABLE							
Girder	A	B	C	D	E	F	G
1	109'-9 1/4"	103'-4 1/16"	156'-9 1/4"	195'-4 1/16"	704'-2 5/8"	2'-10 1/4"	2'-8"
2	109'-6"	103'-0"	156'-6"	195'-0"	703'-0"	2'-7"	2'-6"
3	109'-2 3/4"	102'-7 15/16"	156'-2 3/4"	194'-7 15/16"	701'-9 3/8"	2'-3 3/4"	2'-4"

Note: 1) For Framing Plan, see Sheet Nos. 24 & 25.
2) For Cross Frame and Overhang Bracket Details, see Sheet Nos. 29 & 30.
3) For Field Splice Details, Shear Connector Details and Optional Shop Splice Details, see Sheet No. 32.
4) For Web Plate Curve Offsets, see Sheet Nos. 27 & 28.
5) If optional web splice is used, ensure flange and web splice welds are inspected by ultrasonic testing after being ground flush.

DRAWING TITLE
SUPERSTRUCTURE DETAILS
PATHWAY 22 OVER SNAKE RIVER
STA. 30+38.71

REVISIONS

DRAWING NO 26
JOB NO 10-124-02
DATE 1/9/13

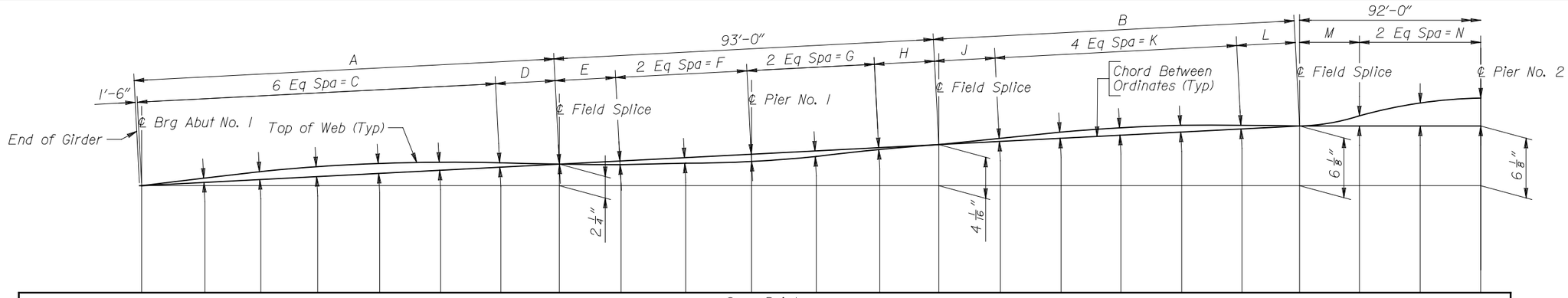

Span Points																							
Girder No.	1.0 ℄ Brg Abut No. 1	1.1	1.2	1.3	1.4	1.5	1.6	1.697	1.8	1.9	2.0 ℄ Pier No. 1	2.1	2.2	2.236	2.3	2.4	2.5	2.6	2.7	2.764	2.8	2.9	3.0 ℄ Pier No. 2
1	0"	7/16"	13/16"	1"	1"	13/16"	7/16"	0"	-3/8"	-5/8"	-3/4"	-9/16"	-3/16"	0"	5/16"	5/8"	3/4"	11/16"	5/16"	0"	1 1/4"	3 5/8"	4 3/8"
2	0"	7/16"	3/4"	15/16"	15/16"	3/4"	7/16"	0"	-5/16"	-9/16"	-11/16"	-1/2"	-3/16"	0"	1/4"	5/8"	3/4"	5/8"	5/16"	0"	1 1/4"	3 11/16"	4 7/16"
3	0"	3/8"	11/16"	13/16"	13/16"	11/16"	3/8"	0"	-5/16"	-9/16"	-11/16"	-1/2"	-3/16"	0"	1/4"	9/16"	11/16"	9/16"	5/16"	0"	1 5/16"	3 11/16"	4 7/16"

WEB CUTTING DIAGRAM

(Includes dead load deflection and grade.
See Note 2.)

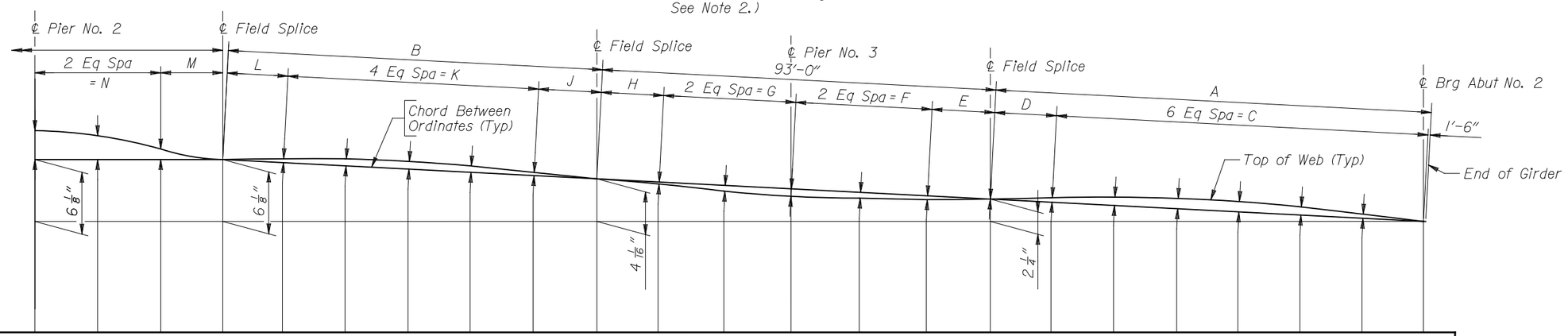

Span Points																							
Girder No.	3.0 ℄ Pier No. 2	3.1	3.2	3.236	3.3	3.4	3.5	3.6	3.7	3.764	3.8	3.9	4.0 ℄ Pier No. 3	4.1	4.2	4.303	4.4	4.5	4.6	4.7	4.8	4.9	5.0 ℄ Brg Abut No. 2
1	4 3/8"	3 5/8"	1 1/4"	0"	5/16"	11/16"	3/4"	5/8"	5/16"	0"	-3/16"	-9/16"	-3/4"	-5/8"	-3/8"	0"	7/16"	13/16"	1"	1"	13/16"	7/16"	0"
2	4 7/16"	3 11/16"	1 1/4"	0"	5/16"	5/8"	3/4"	5/8"	1/4"	0"	-3/16"	-1/2"	-11/16"	-9/16"	-5/16"	0"	7/16"	3/4"	15/16"	15/16"	3/4"	7/16"	0"
3	4 7/16"	3 11/16"	1 5/16"	0"	5/16"	9/16"	11/16"	9/16"	1/4"	0"	-3/16"	-1/2"	-11/16"	-9/16"	-5/16"	0"	3/8"	11/16"	13/16"	13/16"	11/16"	3/8"	0"

WEB CUTTING DIAGRAM

(Includes dead load deflection and grade.
See Note 2.)

TABLE OF DIMENSIONS													
Girder	A	B	C	D	E	F	G	H	J	K	L	M	N
1	109'-9 1/4"	103'-4 1/16"	93'-1 15/16"	15'-1 5/16"	15'-11 3/8"	31'-0 5/8"	39'-0 13/16"	6'-11 3/16"	12'-7 1/4"	78'-1 5/8"	12'-7 1/4"	6'-11 3/16"	39'-0 13/16"
2	109'-6"	103'-0"	93'-0"	15'-0"	16'-0"	31'-0"	39'-0"	7'-0"	12'-6"	78'-0"	12'-6"	7'-0"	39'-0"
3	109'-2 3/4"	102'-7 15/16"	92'-10 1/16"	14'-10 11/16"	16'-0 5/8"	30'-11 3/8"	38'-11 3/16"	7'-0 13/16"	12'-4 3/4"	77'-10 3/8"	12'-4 3/4"	7'-0 13/16"	38'-11 3/16"

Note: 1) A negative value indicates dimension is measured below the Chord Between Ordinates.
2) Web cutting dimensions for parabolic curve at Piers not included. For additional details, see Sheet No. 28.

DRAWING TITLE
SUPERSTRUCTURE DETAILS
PATHWAY 22 OVER SNAKE RIVER
STA. 30+38.71

REVISIONS

DRAWING NO 27
JOB NO 10-124-02
DATE 1/9/13

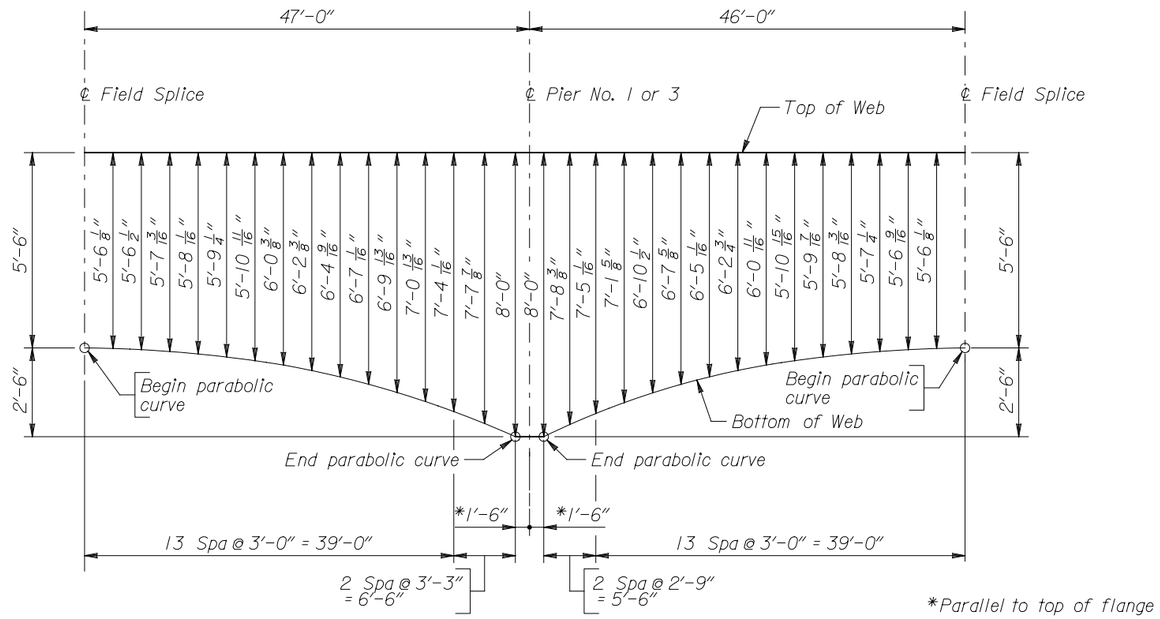

WEB PLATE CURVE OFFSETS-PIER NOS. 1 & 3

Pier No. 1 shown, Pier No. 3 opposite hand

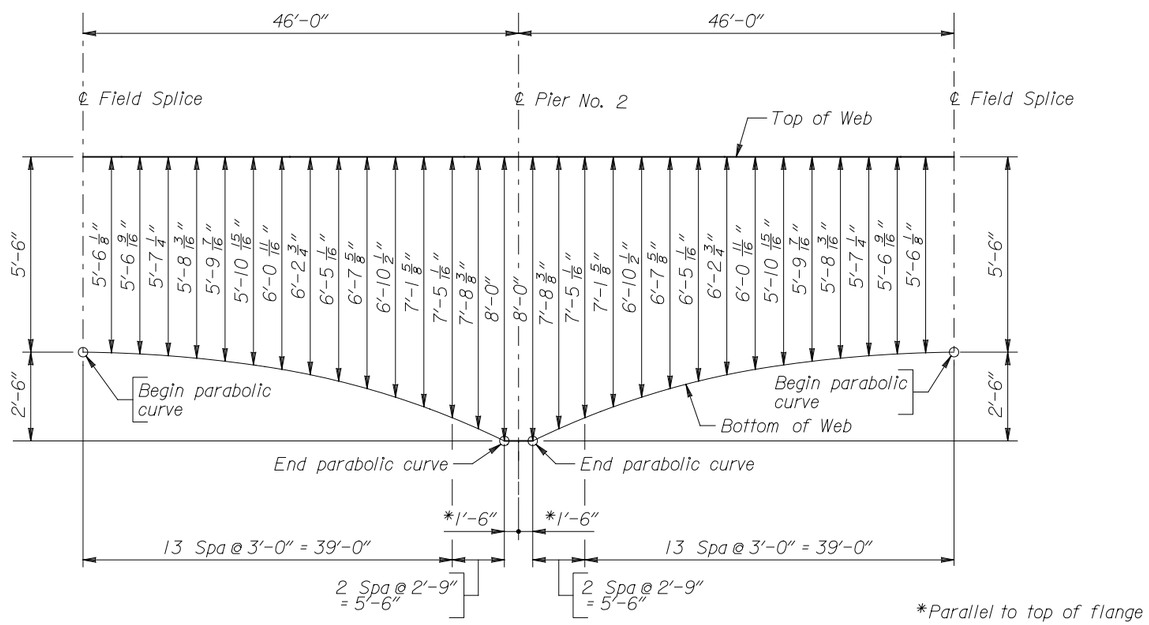

WEB PLATE CURVE OFFSETS-PIER NO. 2

Note: 1) Dimensions are measured along girder and ℄ Field Splice

DRAWING TITLE
SUPERSTRUCTURE DETAILS
PATHWAY 22 OVER SNAKE RIVER
STA. 30+38.71

REVISIONS

DRAWING NO 28
JOB NO 10-124-02
DATE 1/9/13

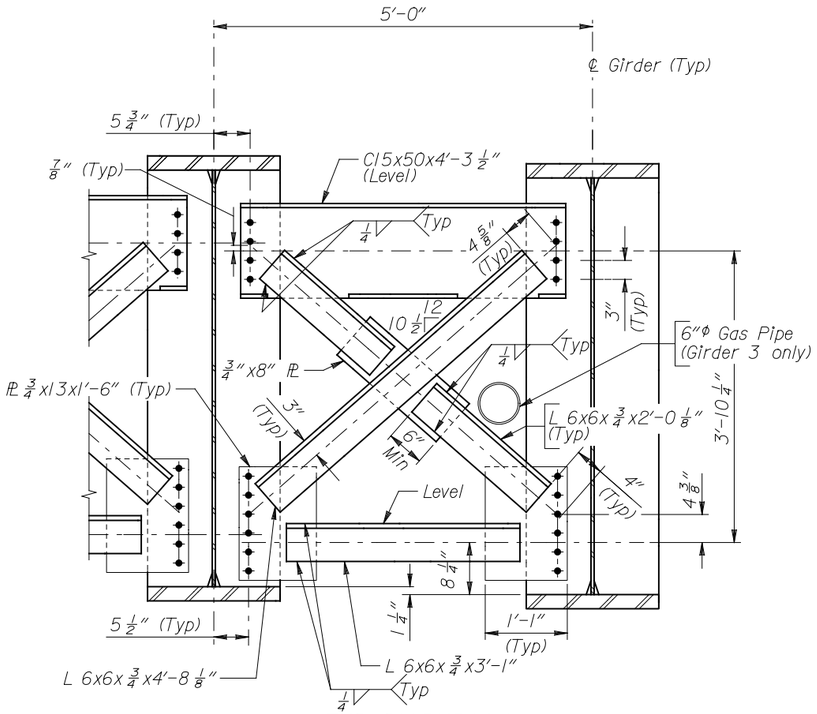

END DIAPHRAGM

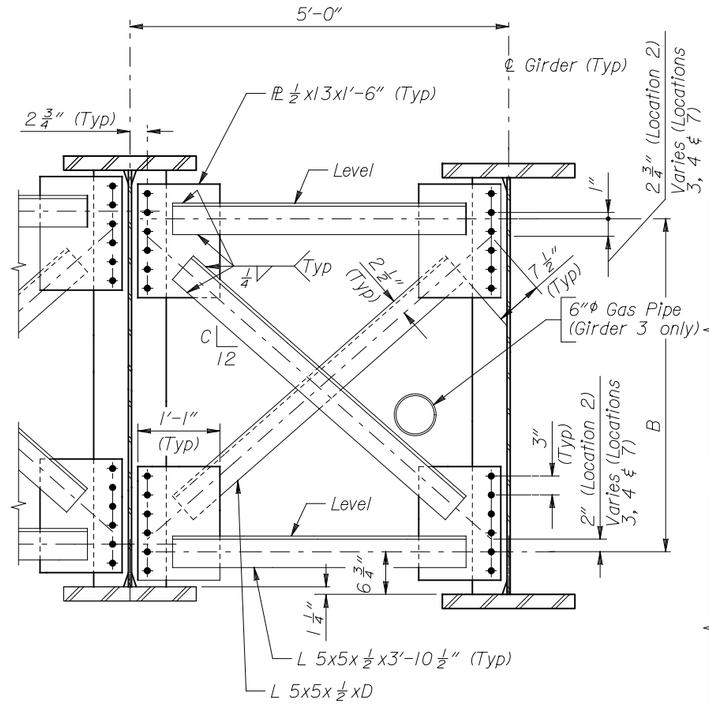

INTERMEDIATE CROSS FRAME

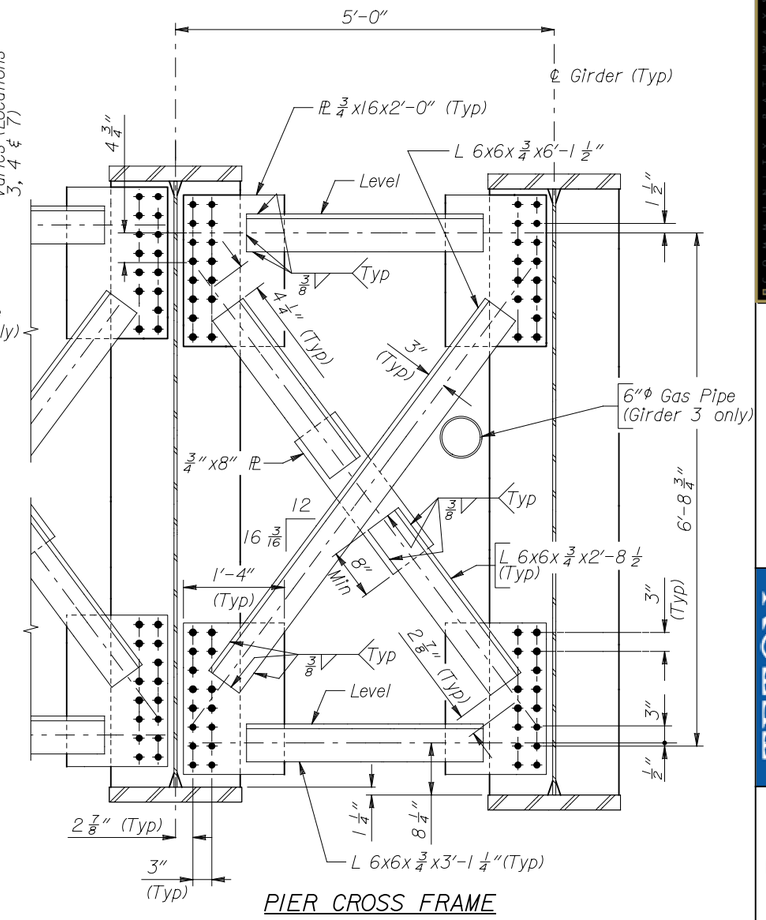

PIER CROSS FRAME

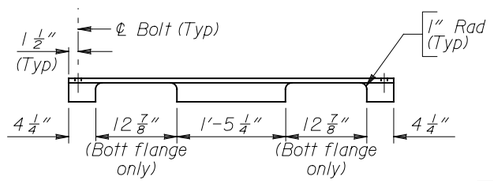

C15x50 PLAN

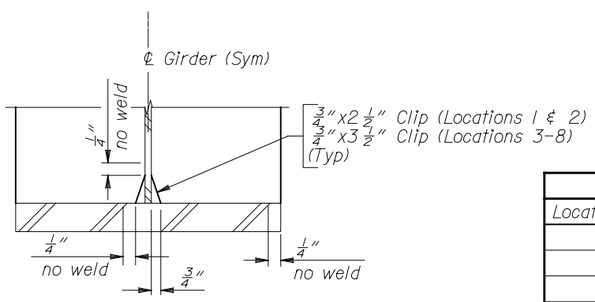

STIFFENER CLIP & WELD DETAIL

DIMENSION TABLE				
Location No.	A	B	C	D
2	5'-6"	4'-4 3/4"	10 9/16	4'-9 5/8"
3	5'-6 1/8"	4'-4 7/8"	10 9/16	4'-9 3/4"
4	6'-2 15/16"	5'-1 11/16"	12 3/8	5'-3 7/8"
5	7'-6 3/8"	——	——	——
6	7'-6 1/4"	——	——	——
7	5'-1 1/16"	4'-11 13/16"	12	5'-2 1/2"

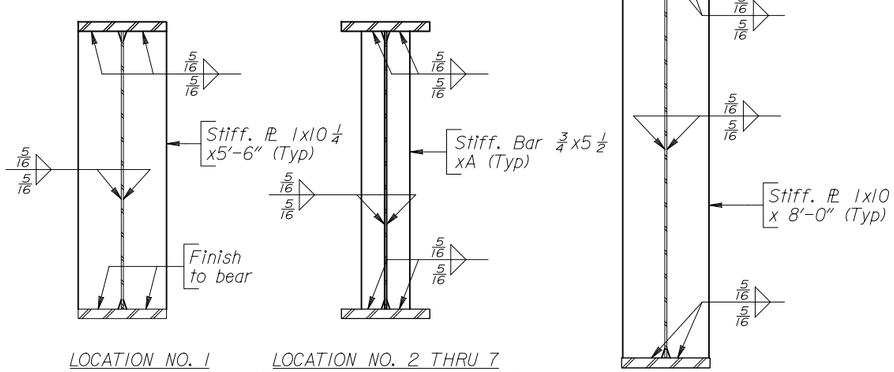

LOCATION NO. 1
(12 plates req'd)

LOCATION NO. 2 THRU 7
(72 bars req'd -Location No. 2)
(8 bars req'd -Location No. 3)
(8 bars req'd -Location No. 4)
(10 bars req'd -Location No. 5)
(22 bars req'd -Location No. 6)
(16 bars req'd -Location No. 7)

LOCATION NO. 8
(54 plates req'd)

STIFFENER DETAILS

Note:
1) The distance from center of bolt holes to edges is 1 1/2" unless noted. Bolt pitch is 3" unless noted.
2) Terminate stiffener and cross frame welds 1/4" from edge of members.
3) For stiffener locations, see Sheet No 26.
4) For Overlook Bracket and Overlook Cross Frame, see Sheet No. 30
5) For gas line utility note, see Sheet No. 2.

DRAWING TITLE
SUPERSTRUCTURE DETAILS
PATHWAY 22 OVER SNAKE RIVER
STA. 30+38.71

REVISIONS

DRAWING NO 29
JOB NO 10-124-02
DATE 1/9/13

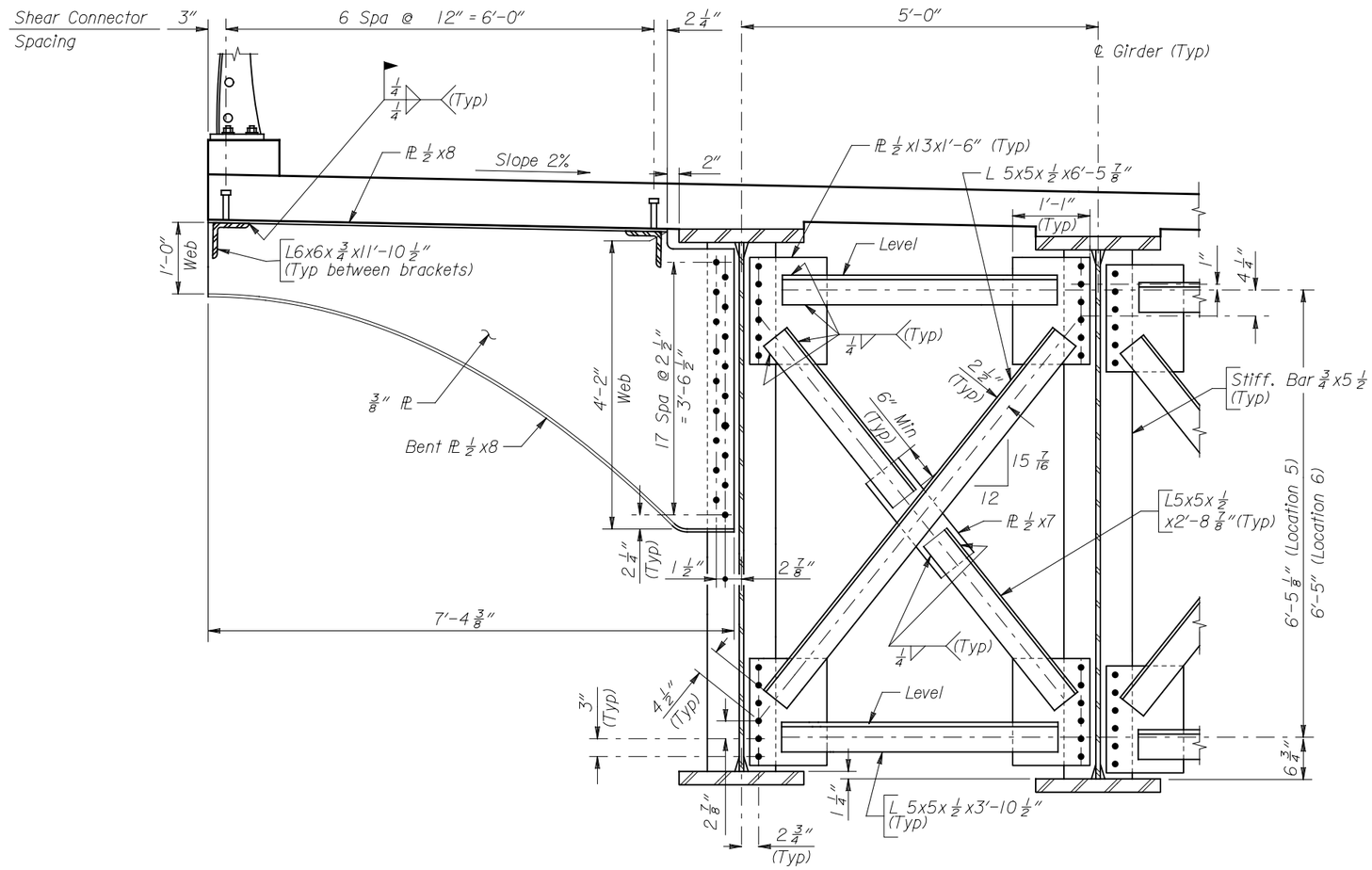

OUTLOOK BRACKET AND CROSS FRAME DETAIL

(8 Brackets req'd)

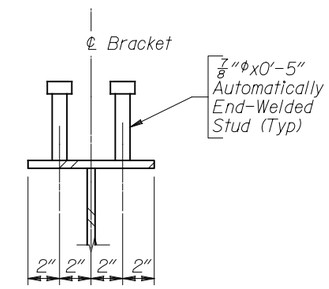

SHEAR CONNECTOR DETAIL

(112 studs req'd)

(Overlook Brackets only)

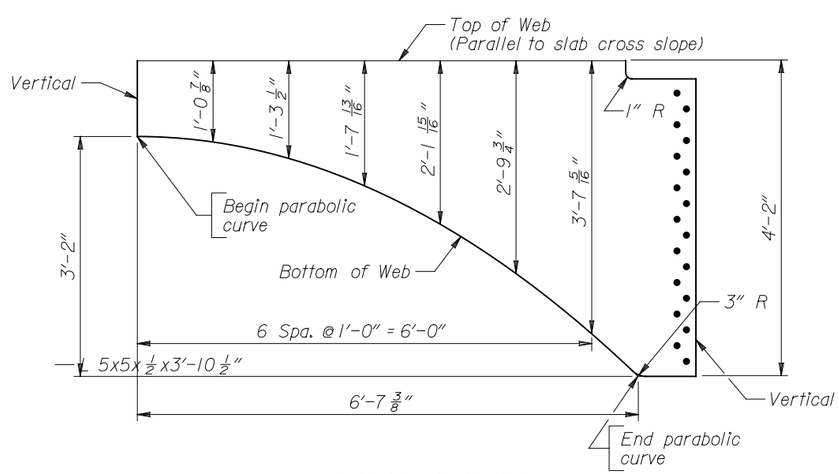

WEB CUTTING DIAGRAM

Note: 1) For additional cross frame details and notes, see Sheet No. 29.
2) Contractor shall provide temporary lateral bracing of Overlook Bracket bottom flange during construction as necessary.

PATH 22

HNTB

TETON COUNTY

TOWN OF JACKSON WYOMING

DRAWING TITLE
SUPERSTRUCTURE DETAILS
PATHWAY 22 OVER SNAKE RIVER
STA. 30+38.71

REVISIONS

DRAWING NO 30
JOB NO 10-124-02
DATE 1/9/13

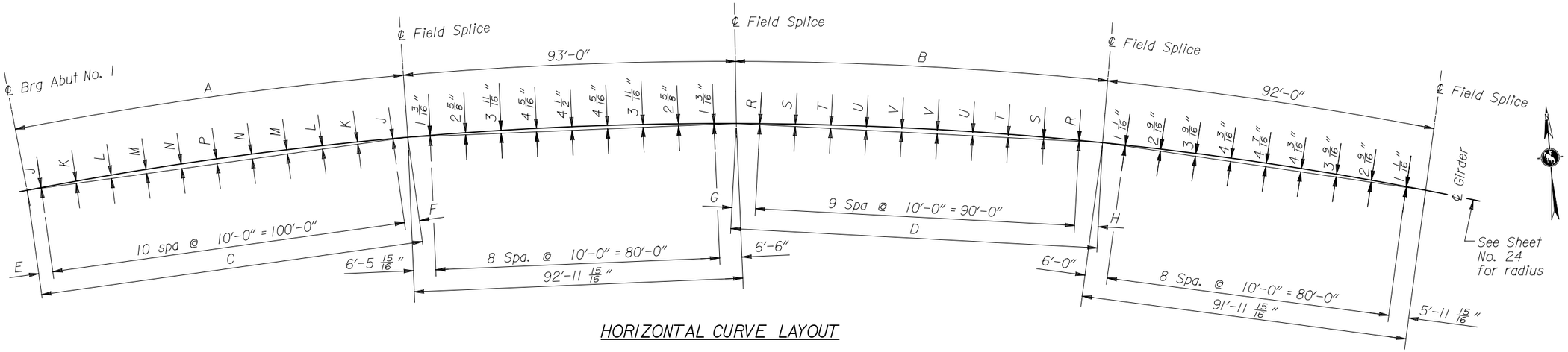

HORIZONTAL CURVE LAYOUT

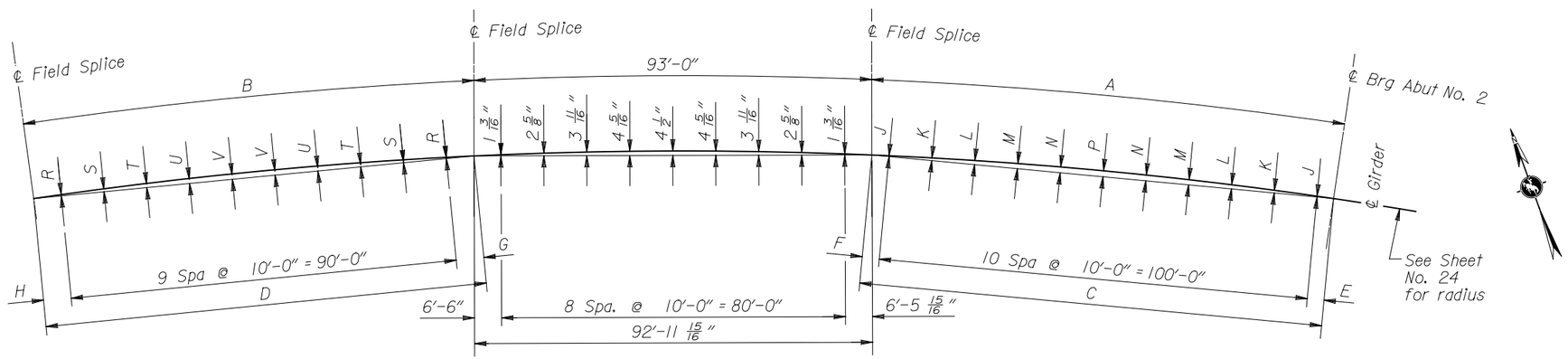

HORIZONTAL CURVE LAYOUT

TABLE OF DIMENSIONS

Girder	A	B	C	D	E	F	G	H	J	K	L	M	N	P	R	S	T	U	V
1	108′-3 1/4″	103′-4 1/16″	108′-3 3/16″	103′-4″	4′-1 5/8″	4′-1 9/16″	6′-8″	6′-8″	7/8″	2 3/4″	4 1/4″	5 5/16″	5 15/16″	6 1/8″	1 3/8″	3″	4 1/4″	5 1/8″	5 1/2″
2	108′-0″	103′-0″	107′-11 15/16″	102′-11 15/16″	4′-0″	3′-11 15/16″	6′-6″	6′-5 15/16″	7/8″	2 3/4″	4 3/16″	5 1/4″	5 7/8″	6 1/8″	1 5/16″	3″	4 1/4″	5 1/16″	5 1/2″
3	107′-8 3/4″	102′-7 15/16″	107′-8 11/16″	102′-7 7/8″	3′-10 3/8″	3′-10 5/16″	6′-3 15/16″	6′-3 15/16″	13/16″	2 3/4″	4 3/16″	5 1/4″	5 7/8″	6 1/16″	1 1/4″	2 15/16″	4 3/16″	5 1/16″	5 7/16″

Note: For Framing Plan and location of girder numbers, see Sheet Nos. 24 & 25.

DRAWING TITLE
SUPERSTRUCTURE DETAILS
PATHWAY 22 OVER SNAKE RIVER
STA. 30+38.71

REVISIONS

DRAWING NO 31
JOB NO 10-124-02
DATE 1/9/13

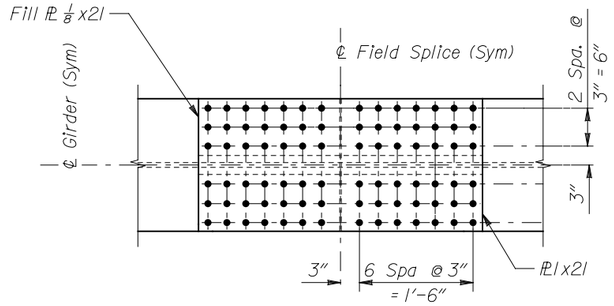

VIEW A-A

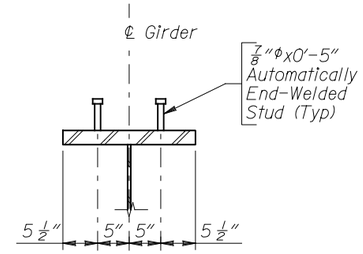

SHEAR CONNECTOR DETAIL
(2046 studs req'd)
(Not including overlook brackets)

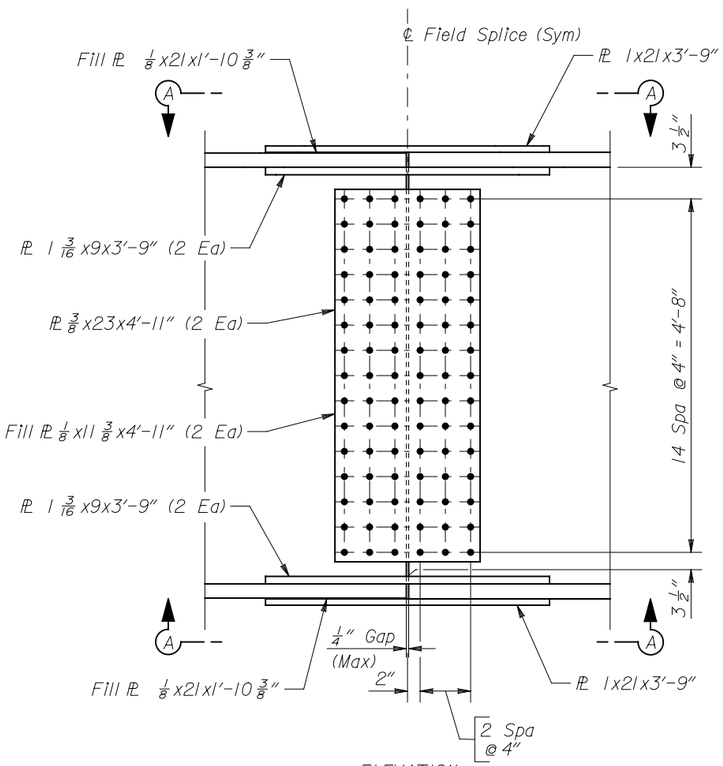

ELEVATION

FIELD SPLICE DETAILS
(18 req'd)

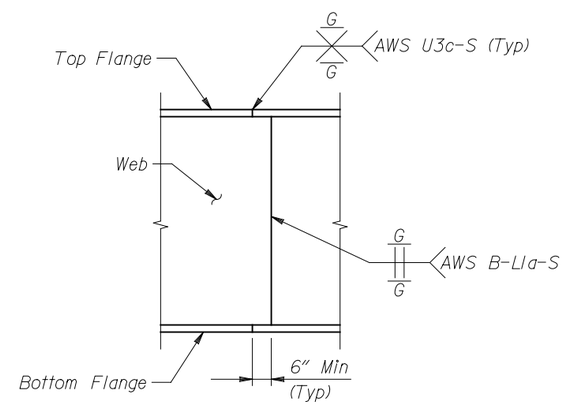

OPTIONAL SHOP SPLICE DETAIL

Note: 1) The distance from center of bolt holes to edges is 1 1/2" unless noted.

DRAWING TITLE
SUPERSTRUCTURE DETAILS
PATHWAY 22 OVER SNAKE RIVER
STA. 30+38.71

REVISIONS

DRAWING NO 32
JOB NO 10-124-02
DATE 1/9/13

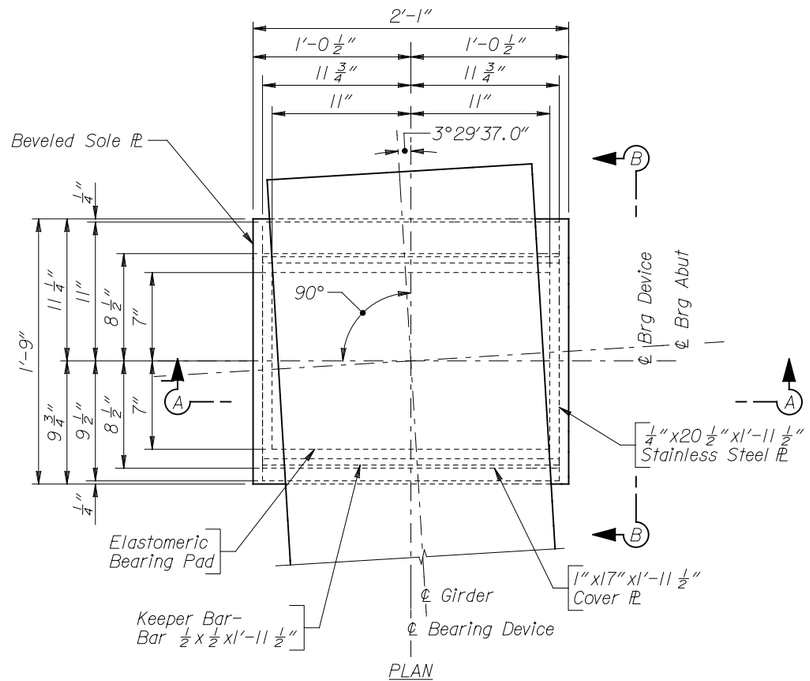

PLAN
(Abutment No. 1 Bearing shown, Abutment No. 2 Bearing opposite hand)

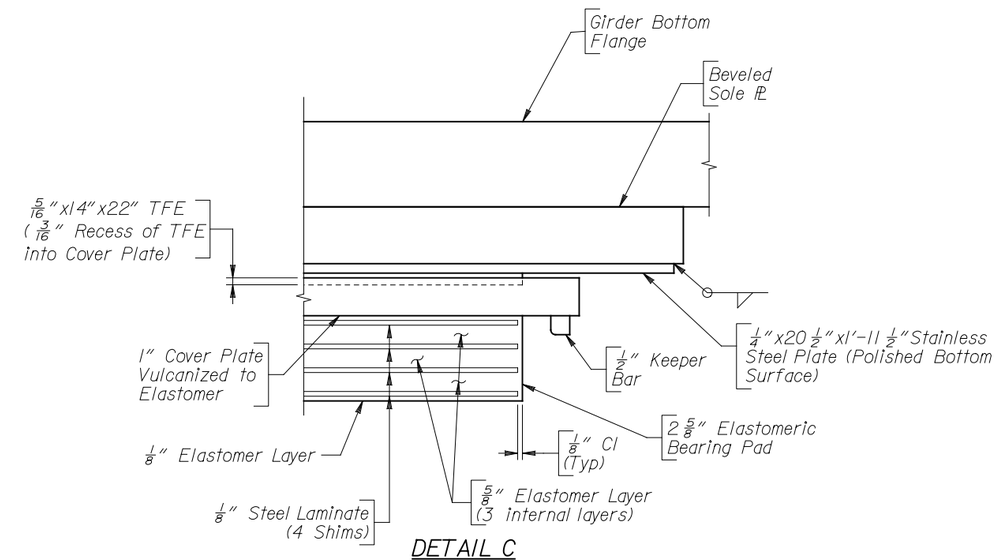

DETAIL C

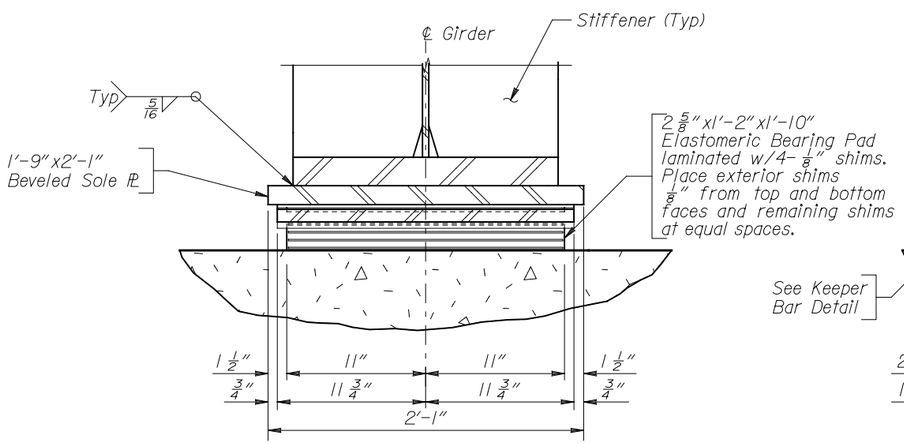

SECTION A-A

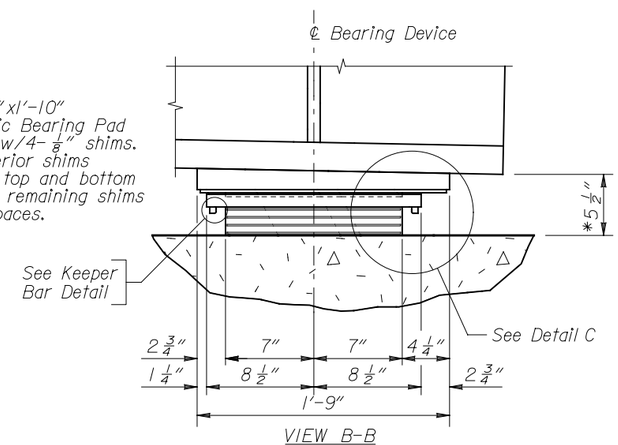

VIEW B-B

* Measured at ℄ brg

ABUTMENT NOS. 1 & 2
(3 req'd Abut No. 1)
(3 req'd Abut No. 2)

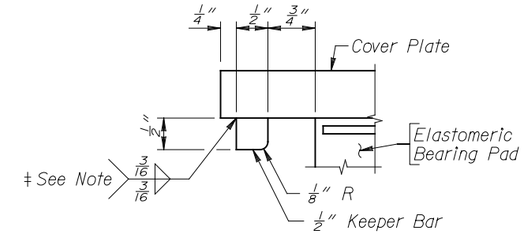

KEEPER BAR DETAIL

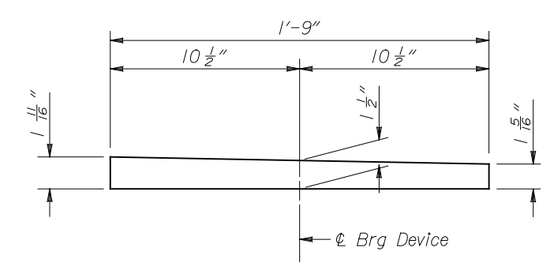

BEVELED SOLE PLATE DETAIL

Note:
1) Stainless steel plate shall be Type 304 conforming to either ASTM A167 or A264 with a surface finish of 8.0 micro-inches.
2) Steel cover plate shall conform to ASTM A709 Grade 50W.
‡ 3) Keeper Bar weld is not required to be completed by an AISC certified fabricator.
4) Elastomeric Bearings shall be 50 durometer with a minimum shear modulus of 95 psi.

HNTB

DRAWING TITLE
BEARING DETAILS - ABUT NO. 1 & 2
PATHWAY 22 OVER SNAKE RIVER
STA. 30+38.71

REVISIONS

DRAWING NO 33
JOB NO 10-124-02
DATE 1/9/13

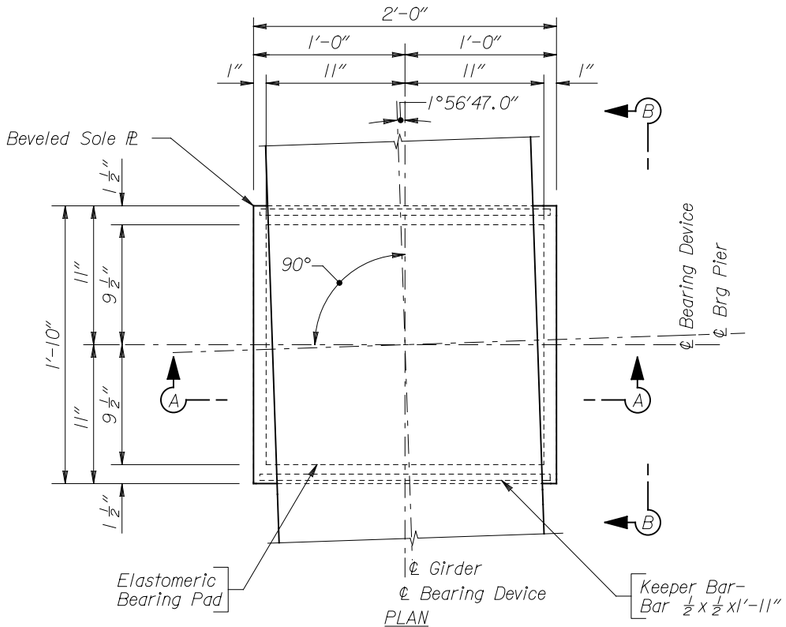

PLAN
(Pier No. 1 Bearing shown, Pier No. 3 Bearing opposite hand)

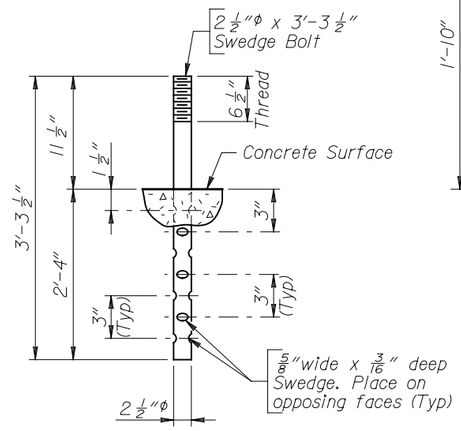

SWEDGE BOLT DETAIL

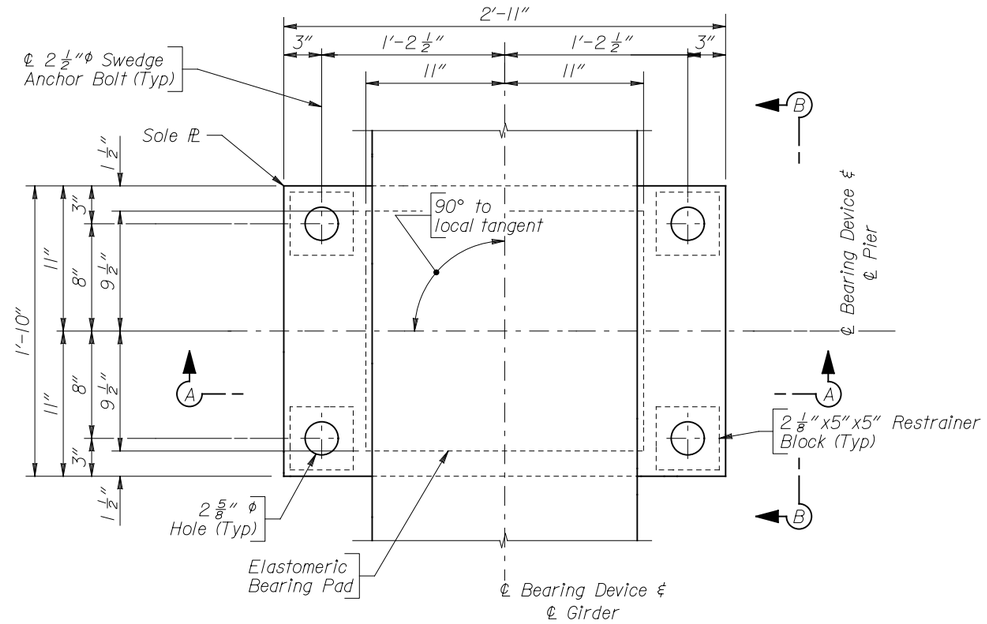

PLAN

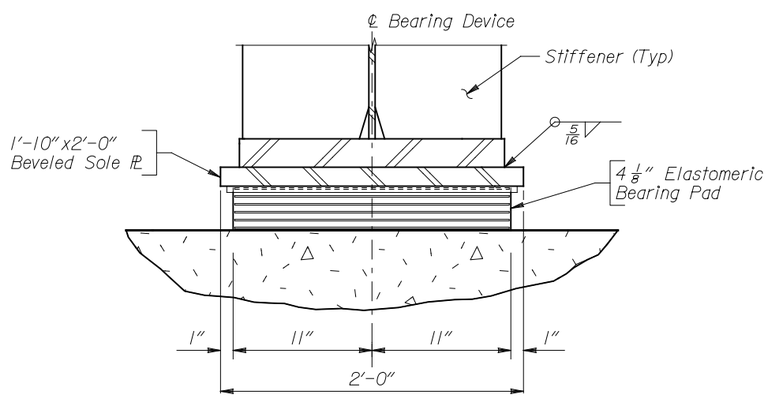

SECTION A-A

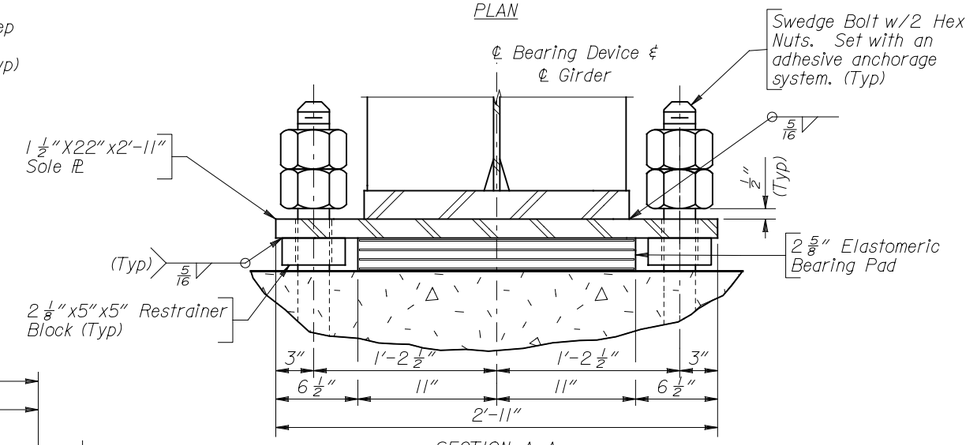

SECTION A-A

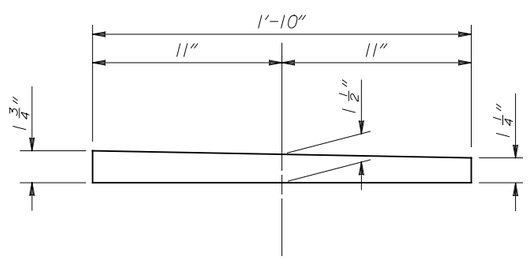

BEVELED SOLE PLATE DETAIL

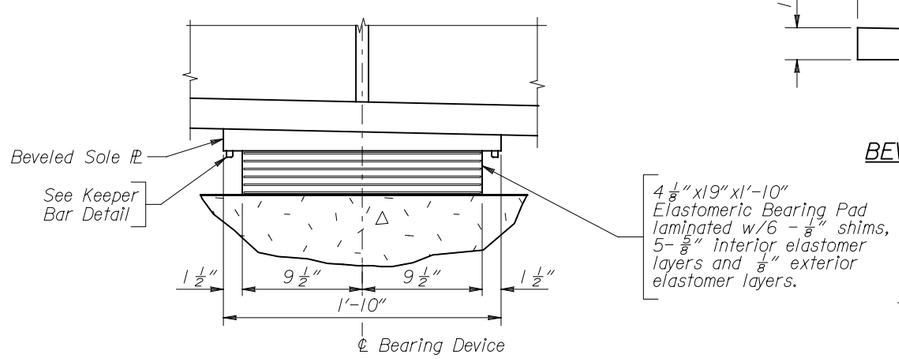

VIEW B-B

PIER NOS. 1 & 3
(3 req'd Pier No. 1)
(3 req'd Pier No. 3)

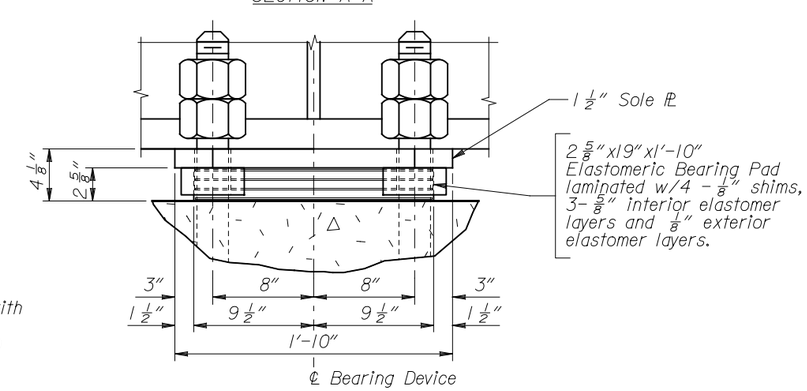

VIEW B-B

PIER NO. 2
(3 req'd)

Note:
1) Elastomeric Bearings shall be 50 durometer with a minimum shear modulus of 95 psi.
2) Steel sole plate shall conform to ASTM A709 Grade 50W.
3) Swedge Bolts shall conform to ASTM F1554, Grade 50W.
4) For additional notes and details, see Sheet No. 33.

DRAWING TITLE
BEARING DETAILS - PIERS NO. 1 - 3
PATHWAY 22 OVER SNAKE RIVER
STA. 30+38.71

REVISIONS

DRAWING NO 34
JOB NO 10-124-02
DATE 1/9/13

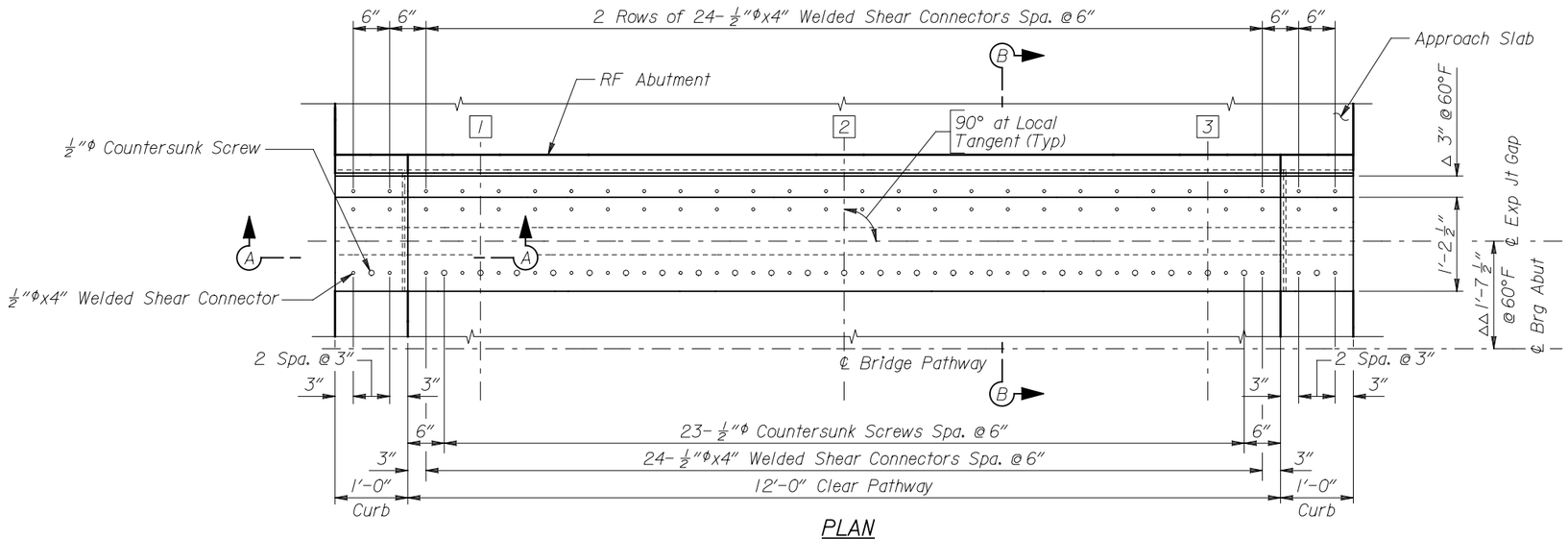

PLAN

(Expansion joint at Abutment No. 2 shown, Abutment No. 1 similar)

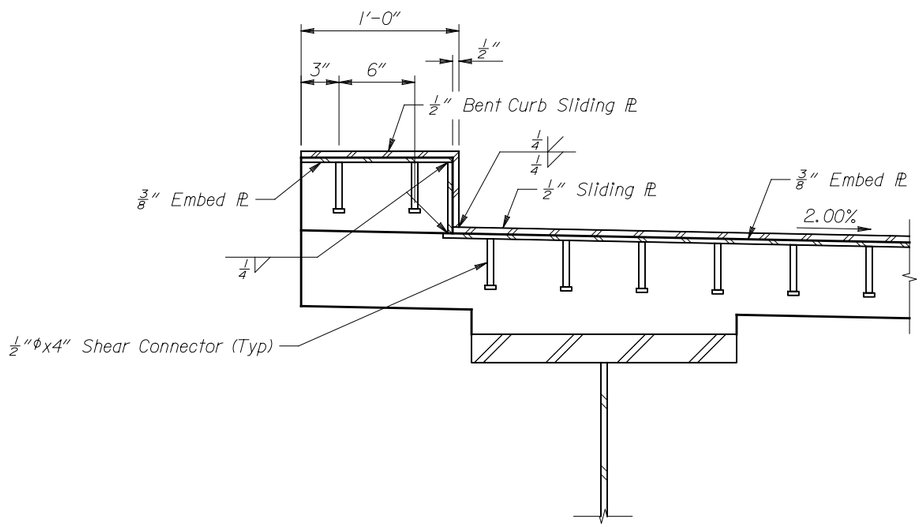

SECTION A-A

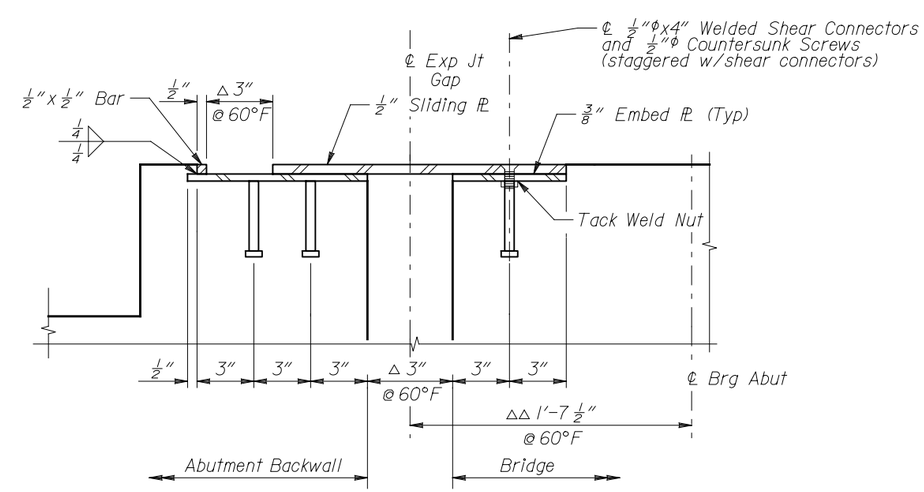

SECTION B-B

(Shown at slab, curb similar)

Note: Δ 1) Increase opening ¼" for each 10°F below 60°F and increase opening ¼" for each 10°F above 60°F. Account for variance in slab forming.

ΔΔ 2) Increase dimension from ℄ Bearing Abutment to ℄ Expansion Joint Gap ⅛" for each 10°F below 60°F and decrease opening ⅛" for each 10°F above 60°F.

DRAWING TITLE
EXPANSION JOINT DETAILS
PATHWAY 22 OVER SNAKE RIVER
STA. 30+38.71

REVISIONS

DRAWING NO 35
JOB NO 10-124-02
DATE 1/9/13

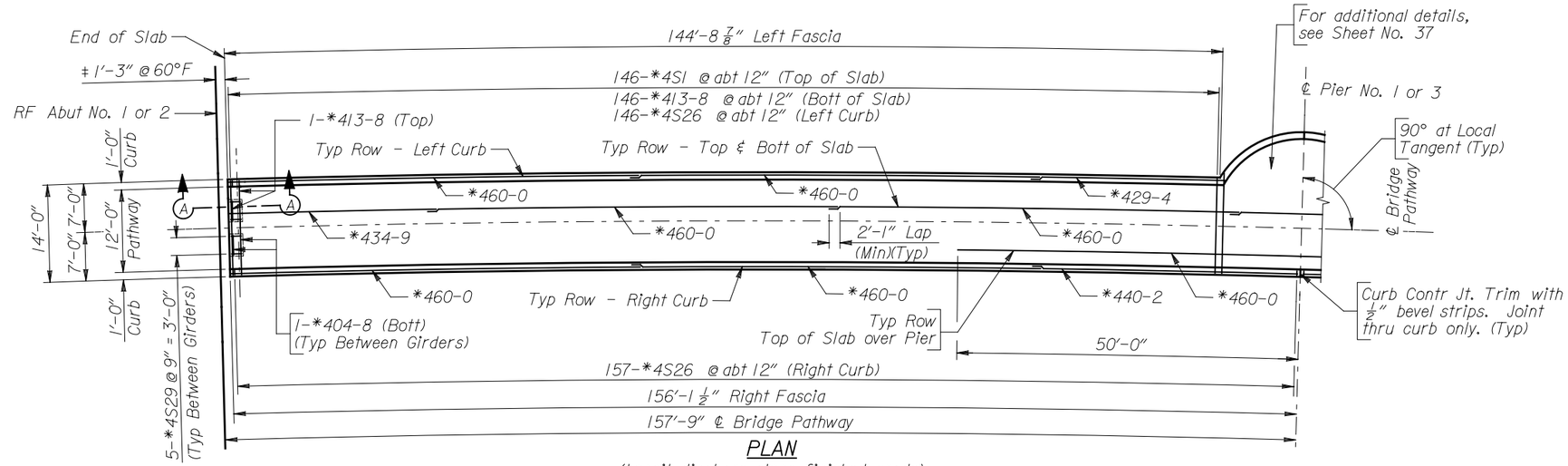

PLAN

(Longitudinal are along finished grade)

‡ Decrease opening 1/4" for each 10°F rise in temperature.

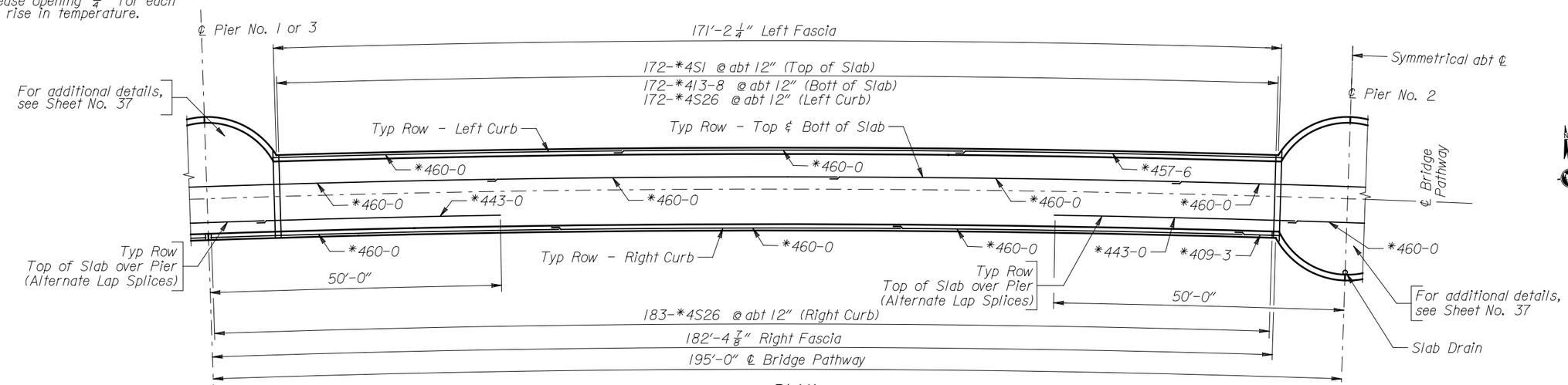

PLAN

(Longitudinal dimensions are measured along finished grade)

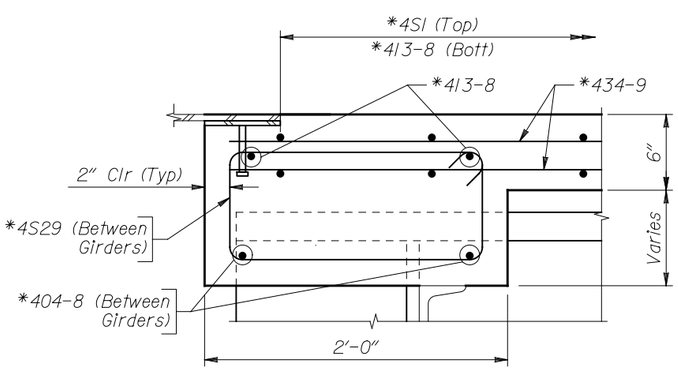

SECTION A-A

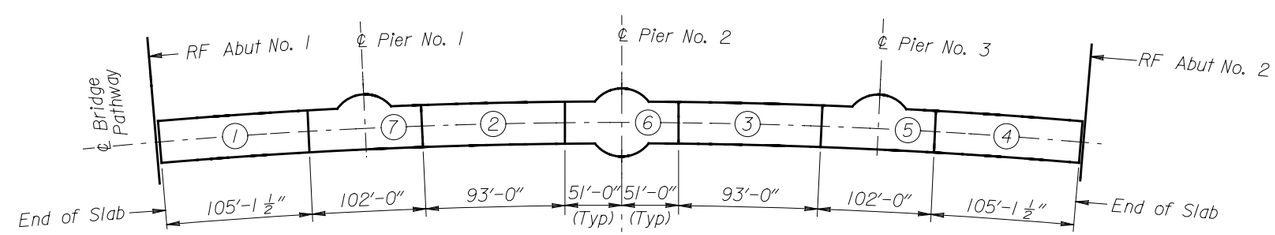

SLAB PLACEMENT DIAGRAM

Any placement must occur within 8 hours.

Note: 1) For Typical Sections, see Sheet No. 38.
2) For Pedestrian Railing Layout, see Sheet No. 39.
3) For Overlook Drainage Details, see Sheet No. 37.

DRAWING TITLE
SLAB DETAILS
PATHWAY 22 OVER SNAKE RIVER
STA. 30+38.71

REVISIONS

DRAWING NO 36
JOB NO 10-124-02
DATE 1/9/13

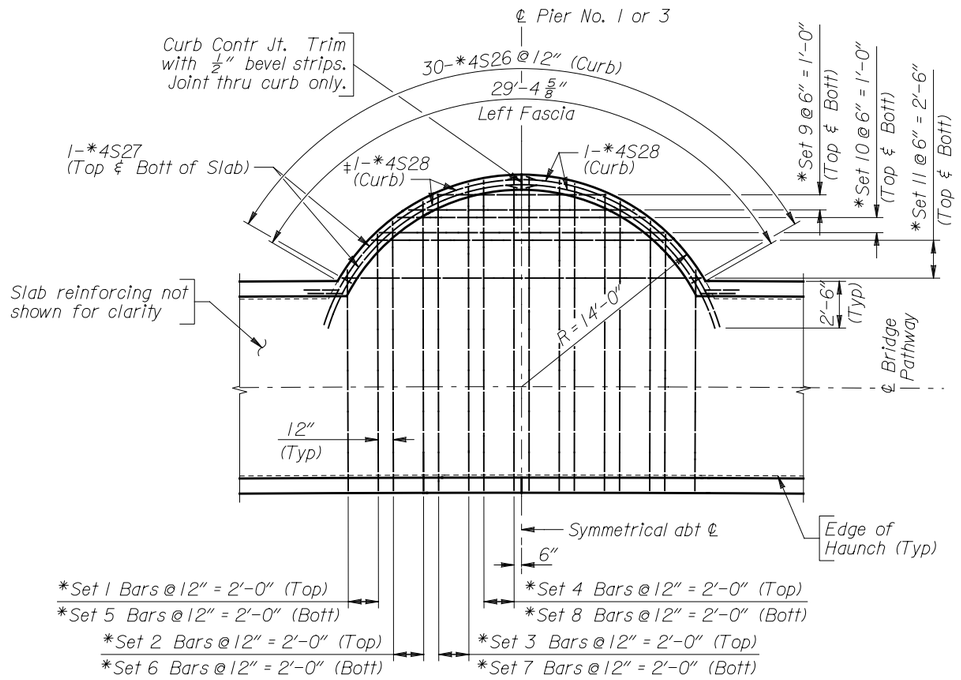

PARTIAL PLAN AT PIERS 1 OR 3

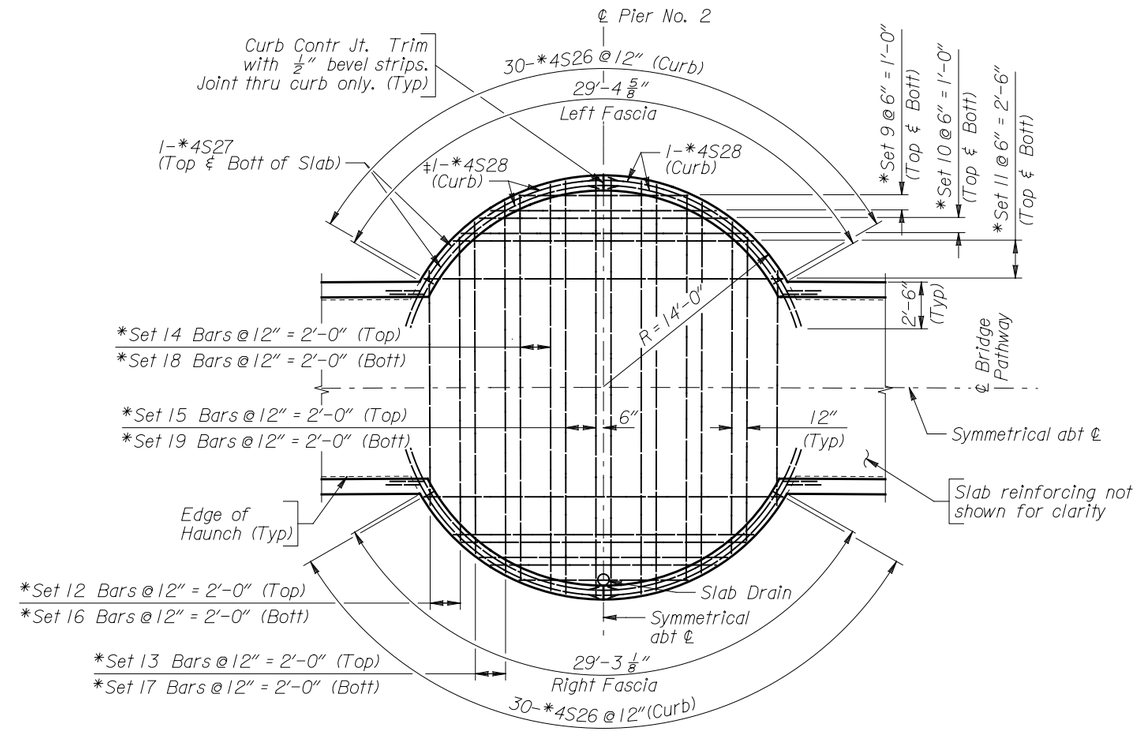

PARTIAL PLAN AT PIER 2

‡ Field bend inner *4S28 bar as required at curb joint.

TABLE OF SCREED ELEVATIONS

Add base elevation 6100.00 to elevations listed in table. Elevations include grade, slope, and correction for dead load deflection. For screed line locations, see Sheet No. 6. 2% cross slope extends to edges of overlooks.

Screed Line No.	Tenth Point of Spans																				
	1.0 ℄ Abut No. 1	1.1	1.2	1.3	1.4	1.5	1.6	1.7	1.8	1.9	2.0 ℄ Pier No. 1	2.1	2.2	2.3	2.4	2.5	2.6	2.7	2.8	2.9	3.0 ℄ Pier No. 2
1	74.54	74.87	75.20	75.52	75.84	76.14	76.44	76.74	77.04	77.34	77.64	78.04	78.44	78.85	79.25	79.65	80.03	80.41	80.76	80.97	81.04
2	74.50	74.83	75.16	75.48	75.80	76.10	76.40	76.70	77.00	77.30	77.60	78.00	78.40	78.81	79.21	79.61	79.99	80.37	80.72	80.93	81.00
3	74.40	74.73	75.06	75.38	75.69	76.00	76.30	76.60	76.90	77.19	77.50	77.90	78.30	78.71	79.11	79.51	79.89	80.27	80.62	80.83	80.90
4	74.30	74.63	74.95	75.28	75.59	75.90	76.20	76.50	76.79	77.09	77.40	77.80	78.20	78.60	79.01	79.40	79.79	80.17	80.52	80.73	80.80
5	74.26	74.59	74.92	75.24	75.55	75.86	76.16	76.46	76.75	77.05	77.36	77.76	78.16	78.56	78.97	79.36	79.75	80.13	80.48	80.69	80.76

Screed Line No.	Tenth Point of Spans																				
	3.0 ℄ Pier No. 2	3.1	3.2	3.3	3.4	3.5	3.6	3.7	3.8	3.9	4.0 ℄ Pier No. 3	4.1	4.2	4.3	4.4	4.5	4.6	4.7	4.8	4.9	5.0 ℄ Abut. No. 2
1	81.04	80.97	80.76	80.41	80.03	79.65	79.25	78.85	78.44	78.04	77.64	77.34	77.04	76.74	76.45	76.14	75.84	75.52	75.20	74.87	74.54
2	81.00	80.93	80.72	80.37	79.99	79.61	79.21	78.81	78.40	78.00	77.60	77.30	77.00	76.70	76.41	76.10	75.80	75.48	75.16	74.83	74.50
3	80.90	80.83	80.62	80.27	79.89	79.51	79.11	78.71	78.30	77.90	77.50	77.19	76.90	76.60	76.30	76.00	75.69	75.38	75.06	74.73	74.40
4	80.80	80.73	80.52	80.17	79.79	79.40	79.01	78.60	78.20	77.80	77.40	77.09	76.79	76.50	76.20	75.90	75.59	75.28	74.96	74.63	74.30
5	80.76	80.69	80.48	80.13	79.75	79.36	78.97	78.56	78.16	77.76	77.36	77.05	76.75	76.46	76.16	75.86	75.55	75.24	74.92	74.59	74.26

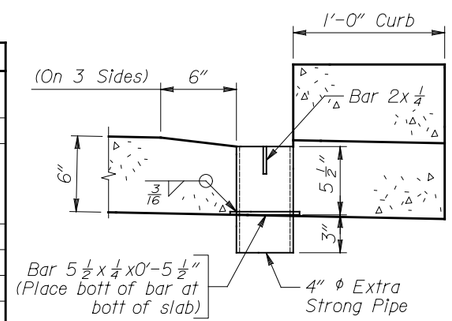

ELEVATION

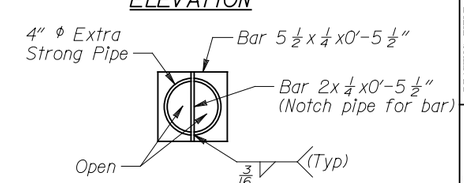

PLAN

DECK DRAIN DETAILS

Note: 1) Before placing slab, install and properly align deck drain.

DRAWING TITLE: SLAB DETAILS
PATHWAY 22 OVER SNAKE RIVER
STA. 30+38.71

REVISIONS

DRAWING NO 37
JOB NO 10-124-02
DATE 1/9/13

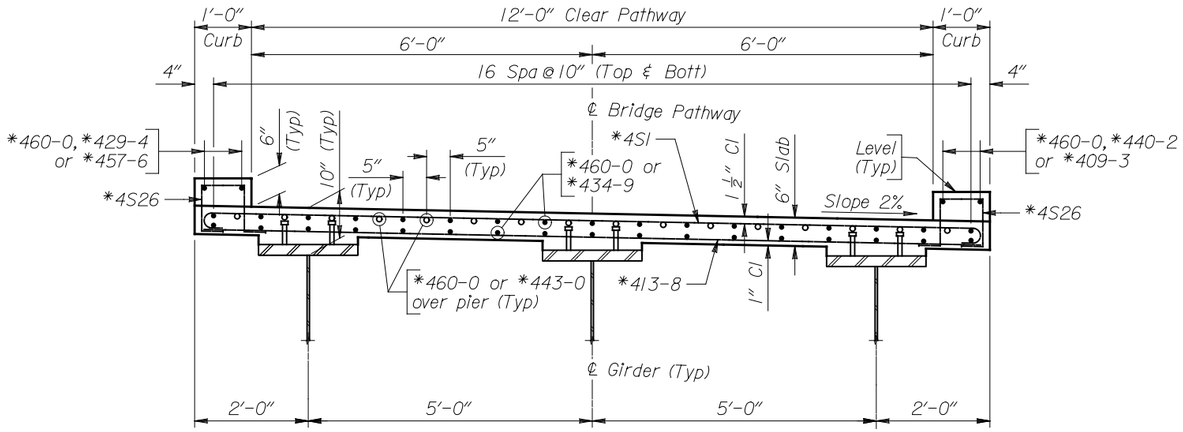

TYPICAL SECTION

(Looking ahead station)

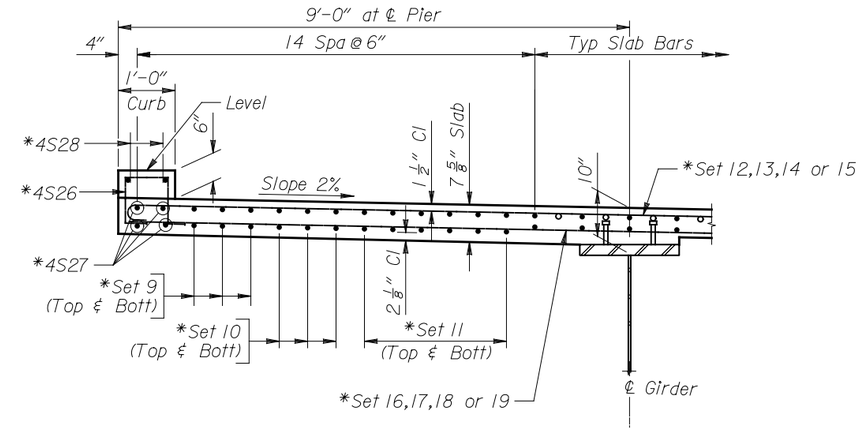

PARTIAL SECTION AT ℄ PIER NO. 2

(Pier Nos. 1 & 3 similar)
(Looking ahead station)

BILL OF REINFORCEMENT

Location	Mark	Number Required
Slab & Curb	*4S1	636
	*Set 1 Bars	4
	*Set 2 Bars	4
	*Set 3 Bars	4
	*Set 4 Bars	4
	*Set 5 Bars	4
	*Set 6 Bars	4
	*Set 7 Bars	4
	*Set 8 Bars	4
	*Set 9 Bars	8
	*Set 10 Bars	8
	*Set 11 Bars	8
	*Set 12 Bars	2
	*Set 13 Bars	2
	*Set 14 Bars	2
	*Set 15 Bars	2
	*Set 16 Bars	2
	*Set 17 Bars	2
	*Set 18 Bars	2
	*Set 19 Bars	2
	*4S26	3484
	*4S27	16
	*4S28	16
	*4S29	20
	*460-0	458
	*457-6	4
	*443-0	48
	*440-2	4
	*434-9	68
	*429-4	4
	*413-8	640
	*409-3	4
	*404-8	8
	*Weight	*45,924

Bending Diagrams

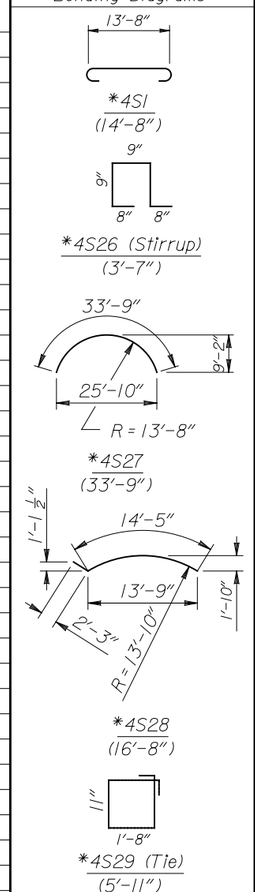

Set Diagrams

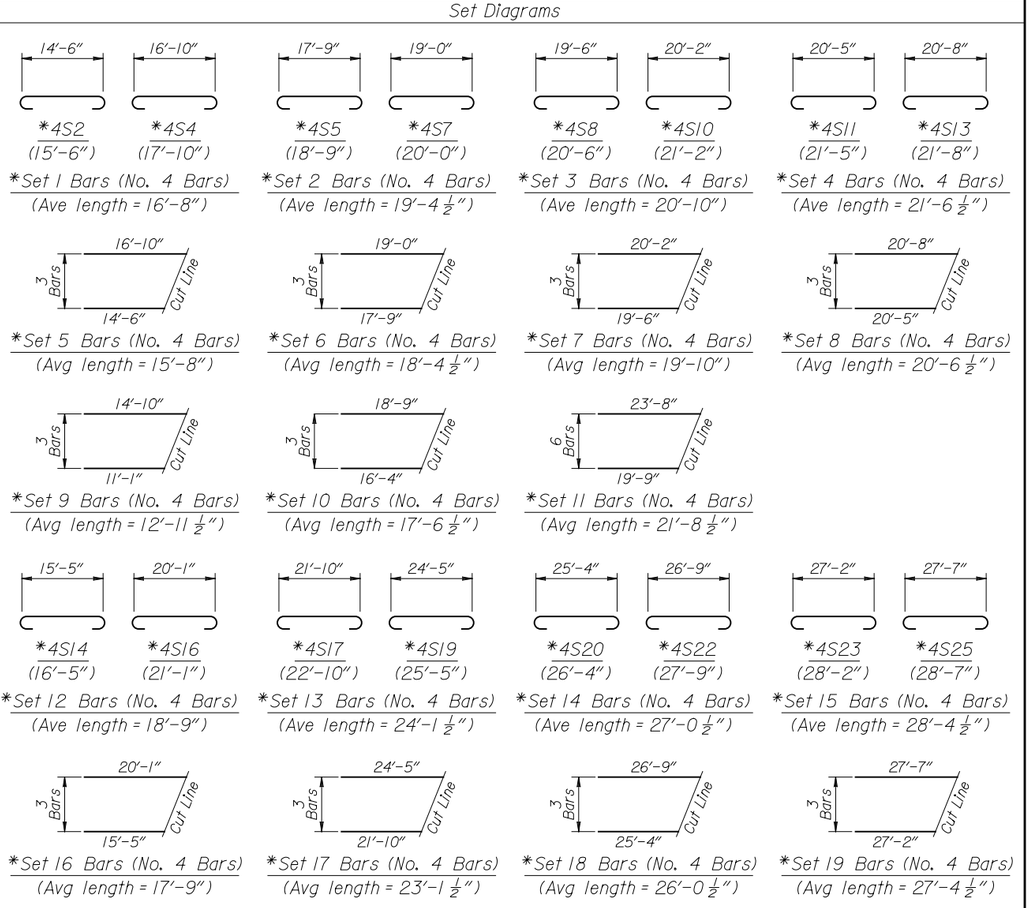

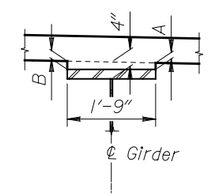

SOFFIT DETAIL

TABLE OF DIMENSIONS		
Location	A	B
℄ Abutments	1 1/2"	2"
℄ Piers	1 3/8"	1 7/8"

Note: 1) Cant 4S1, Set 1, Set 2, Set 3, Set 4, Set 12, Set 13, Set 14 and Set 15 bars to maintain minimum top and bottom slab clearances.

DRAWING TITLE
SLAB DETAILS
PATHWAY 22 OVER SNAKE RIVER
STA. 30+38.71

REVISIONS

DRAWING NO 38
JOB NO 10-124-02
DATE 1/9/13

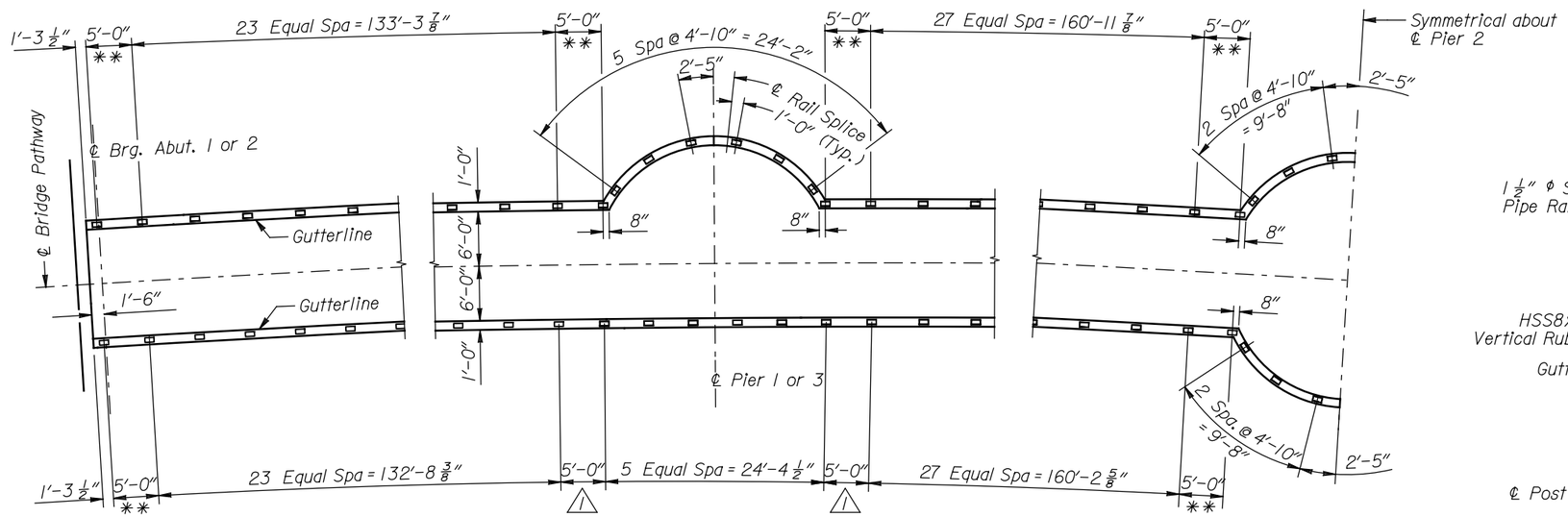

PART PLAN

(Longitudinal dimensions are measured horizontally along gutterline)
(Junction box gaps in curbs not shown)

** Denotes End Panel

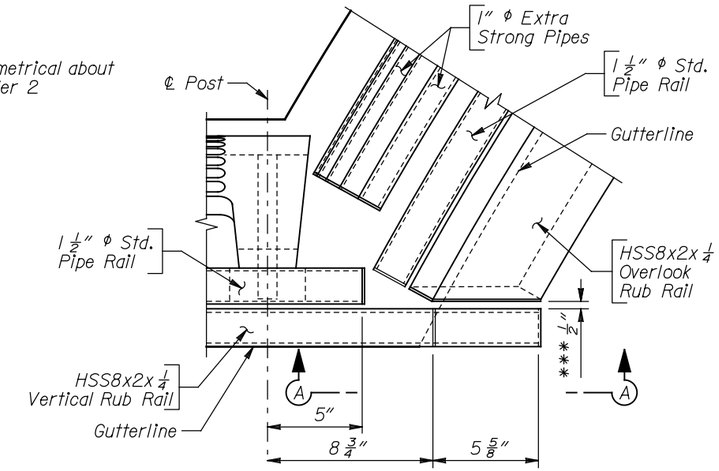

PLAN - RUB RAIL INTERFACE 3

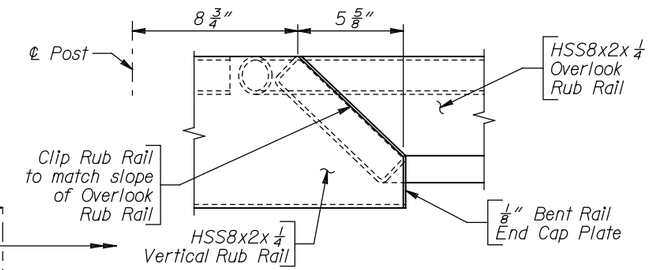

3 VIEW A-A

3 *** Cut end of Overlook Rub Rail to clear Vertical Rub Rail by 1/2".

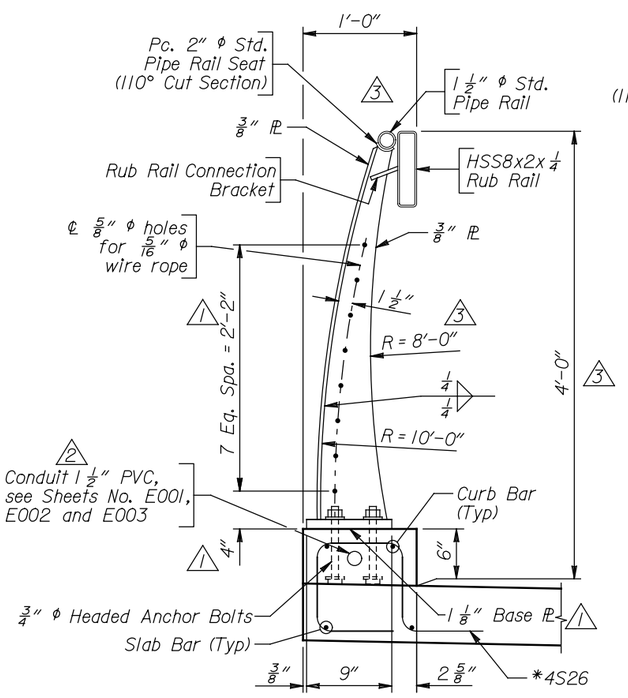

TYPICAL SECTION
INTERMEDIATE PANEL AND POST

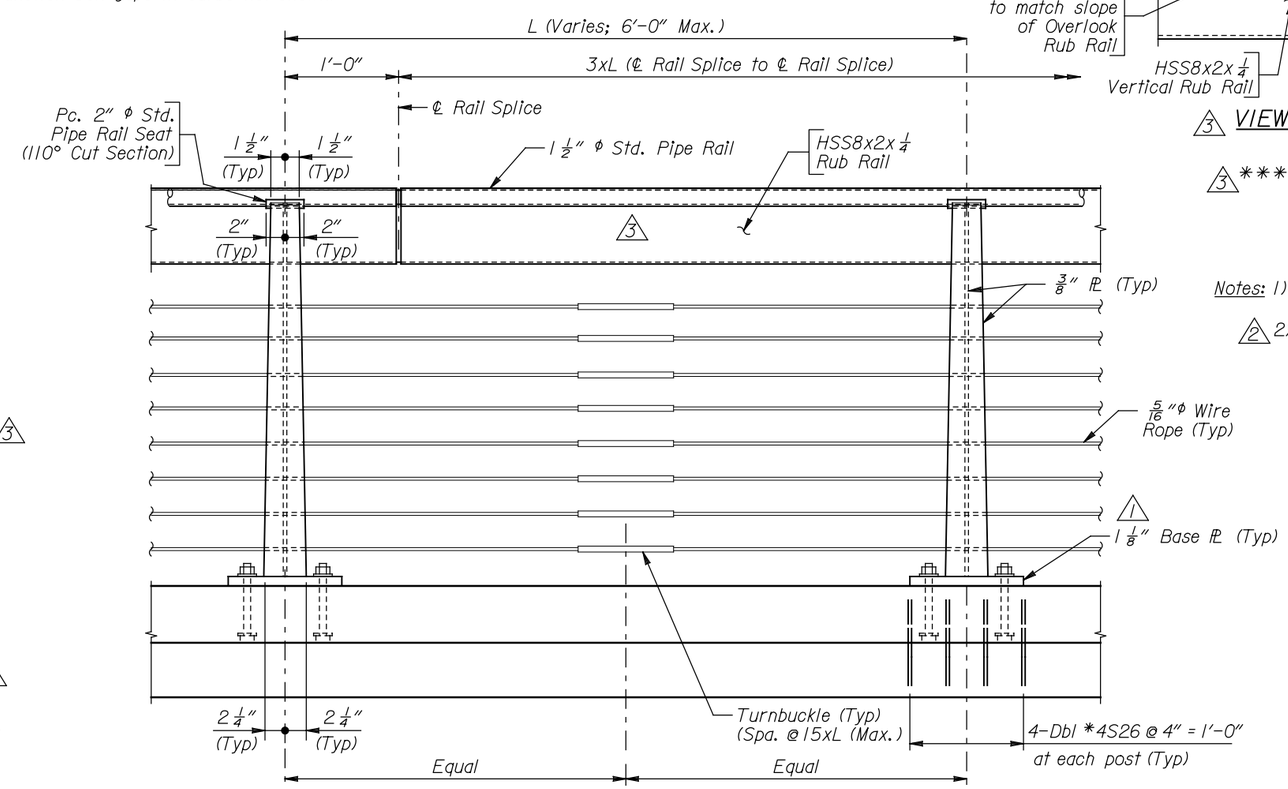

ELEVATION - INTERMEDIATE PANEL

Notes: 1) For additional details and notes, see Sheet Nos. 40 and 41.
2) For location of junction box gaps in curbs, see Sheets No. E001, E002 and E003.

DRAWING TITLE
PEDESTRIAN RAILING DETAILS
PATHWAY 22 OVER SNAKE RIVER
STA. 30+38.71

REVISIONS
1 Revised 11-25-13
2 Added Conduit and notes 3-28-13
3 Revised Rail Height 8-29-13

DRAWING NO 39
JOB NO 10-124-02
DATE 1/9/13

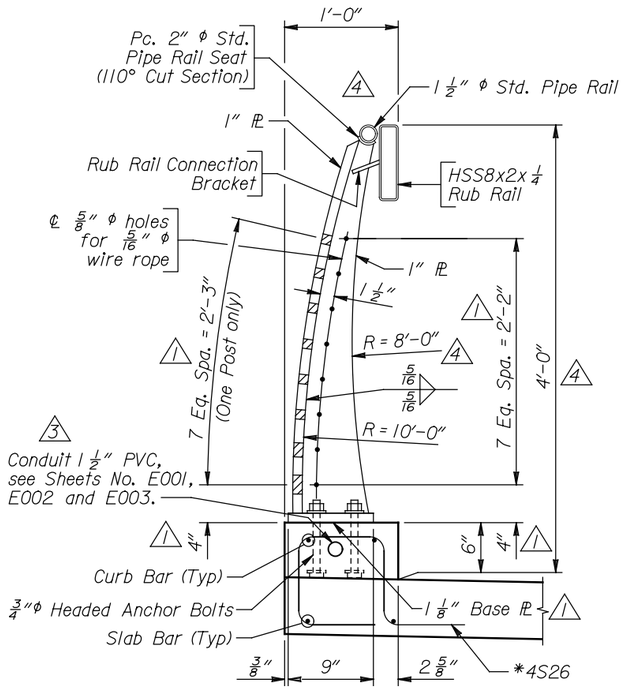

TYPICAL SECTION
END PANEL AND POST

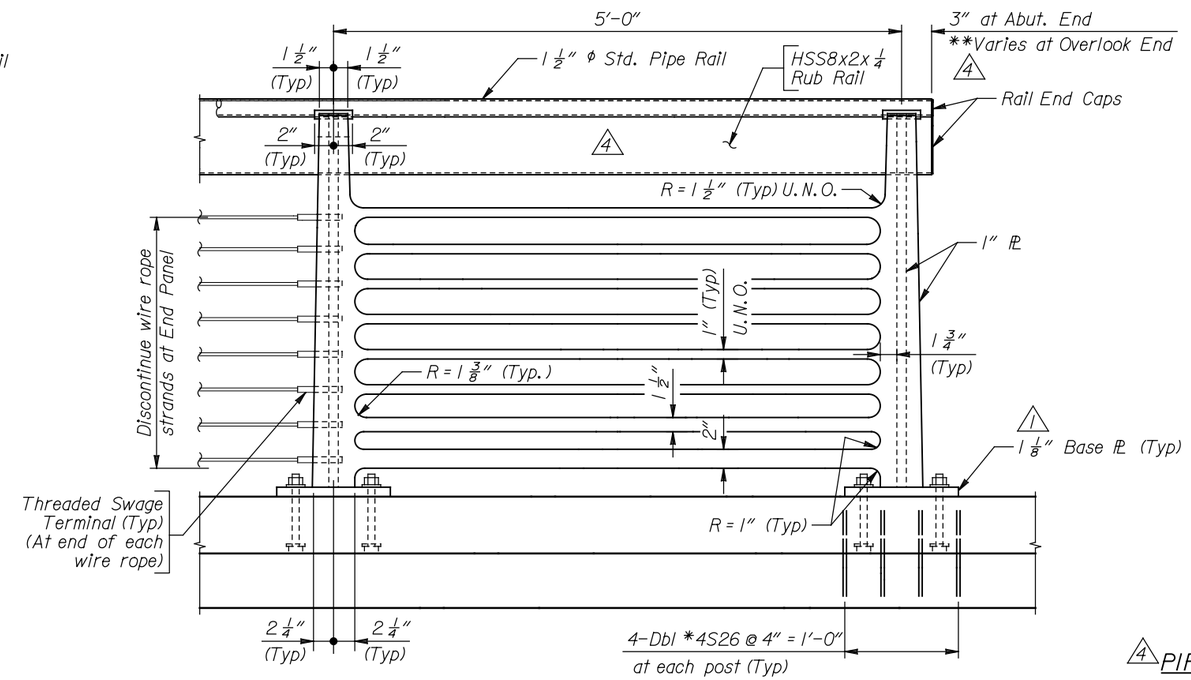

ELEVATION - END PANEL
(12 Required)

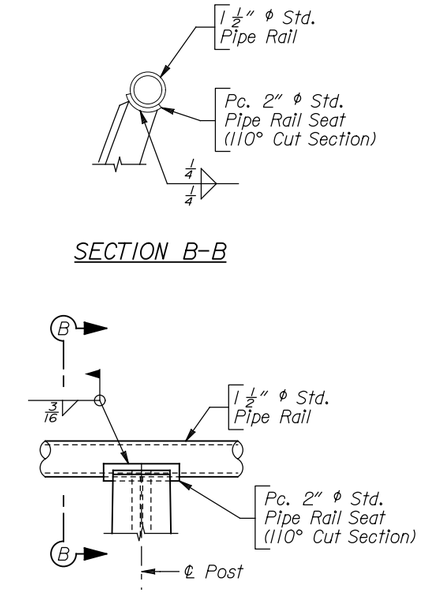

4 PIPE RAIL CONNECTION DETAILS

4 **See Plan - Rub Rail Interface on Sheet No. 39.

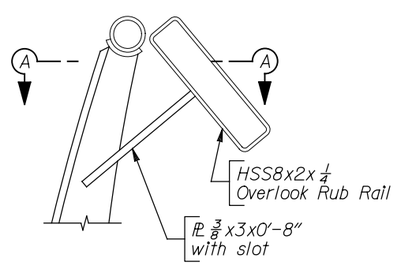

SIDE VIEW 4
(Overlook Post)

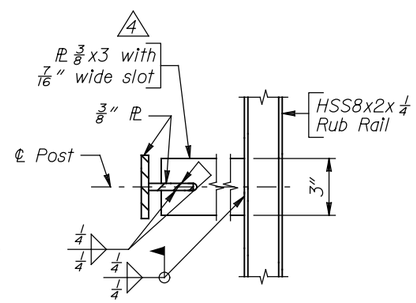

SECTION A-A
(Intermediate Post and Overlook Post) 2

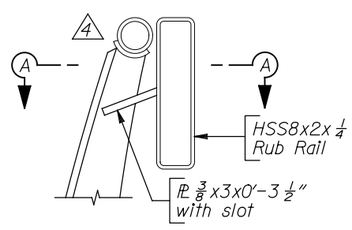

SIDE VIEW
(Intermediate Post and End Post) 4

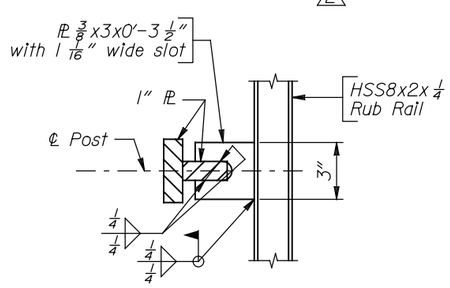

SECTION A-A
(End Post)

RUB RAIL CONNECTION BRACKET DETAILS

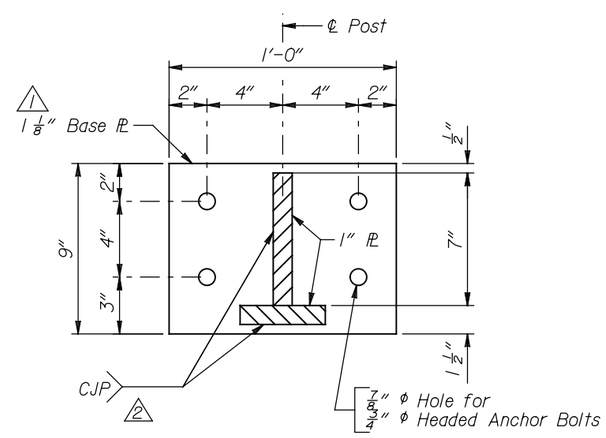

PLAN - BASE PLATE
AT END PANEL POSTS

Notes:

1) Steel plates shall be ASTM A709, Grade 50.
2) Steel pipe shall be ASTM A53, Type E, Grade B.
3) Steel tubing shall be ASTM A500, Grade A.
4) Headed Anchor Bolts shall be ASTM F1554, Grade 105. Each anchor bolt shall be provided with one Heavy Hex nut and 2 washers. Nuts shall be installed snug tight. Burr threads after all nuts at the Base Plate have been tightened. Provide 6" embedment.
5) Wire Rope shall be 5/16" ϕ, consisting of 19 individual wires. Wires shall be stainless steel meeting the requirements of ASTM A492, Type 316.
6) Wire rope manufacturer shall supply additional hardware necessary to erect wire rope, including turnbuckles and bushes in post holes to allow continuation of wire rope.
7) Up to 1/4" shim may be used below posts for leveling.
8) Fence posts shall be placed normal to profile grade.
9) For additional details, see Sheet Nos. 39 and 41.
10) For Bill of Reinforcement and Bending Diagrams, see Sheet No. 38.

4 Revised Rail Height 8-29-13

DRAWING TITLE
PEDESTRIAN RAILING DETAILS
PATHWAY 22 OVER SNAKE RIVER
STA. 30+38.71

REVISIONS
1 Revised 1-25-13
2 Update Base PL weld 2-5-13
3 Added Conduit 5-28-13

DRAWING NO 40
JOB NO 10-124-02
DATE 1/9/13

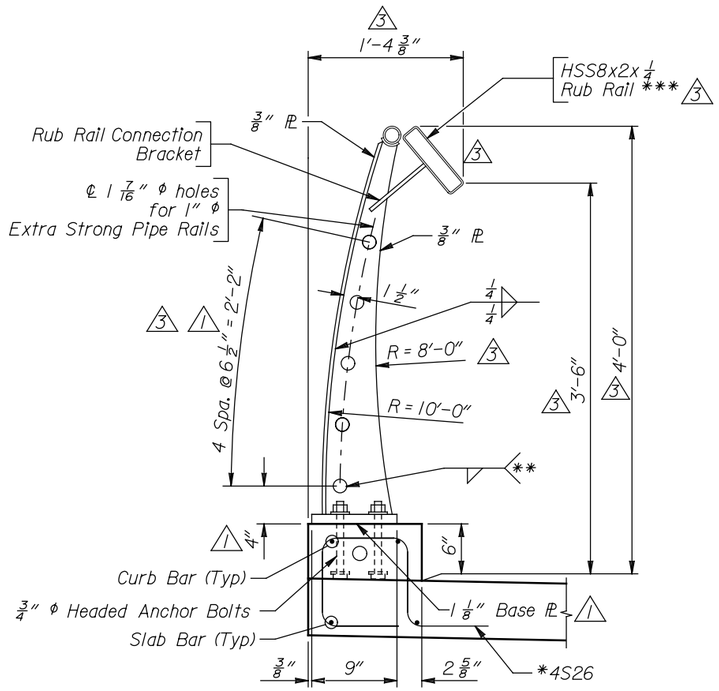

TYPICAL SECTION
OVERLOOK PANEL AND POST

**Tack weld rails at post near midpoint of expansion length (Typ.)

*** Rail may be bent to radius of overlook edge of slab or chorded to approximate plan radius.

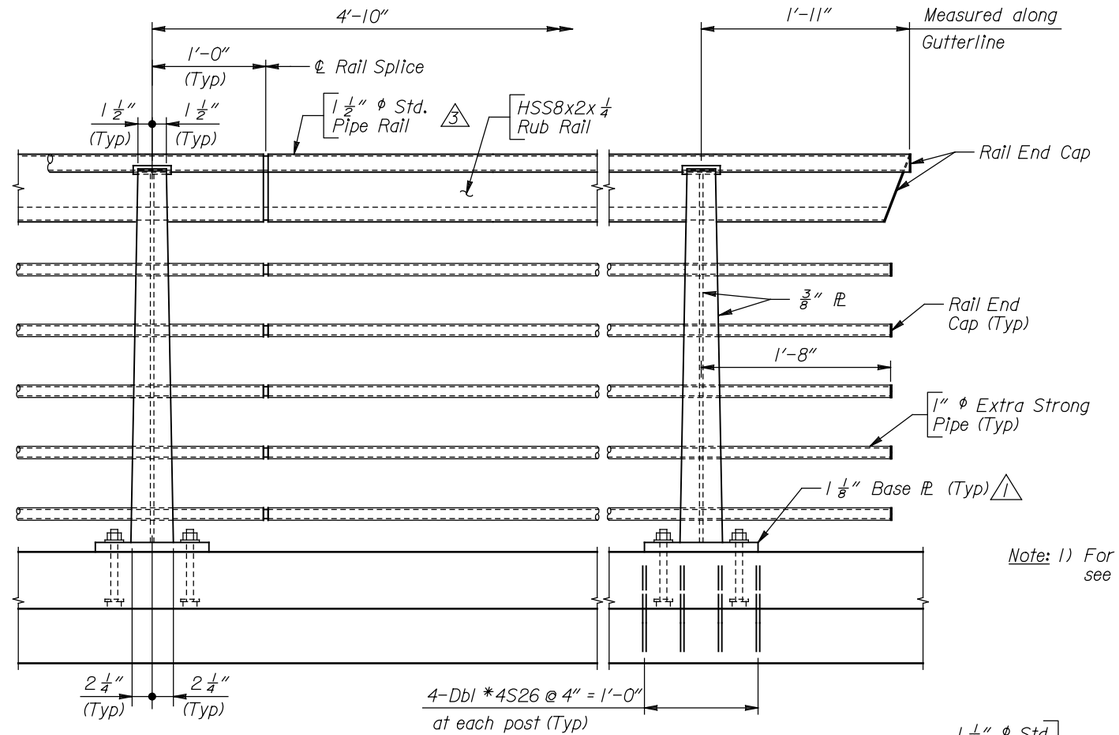

ELEVATION - OVERLOOK PANEL

Note: 1) For additional details and notes, see Sheet Nos. 39 and 40.

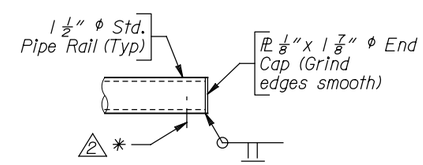

PIPE RAIL

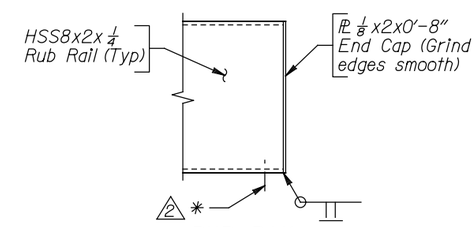

RUB RAIL

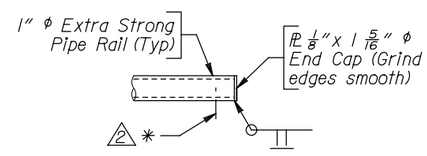

OVERLOOK RAIL

RAIL END CAP DETAILS

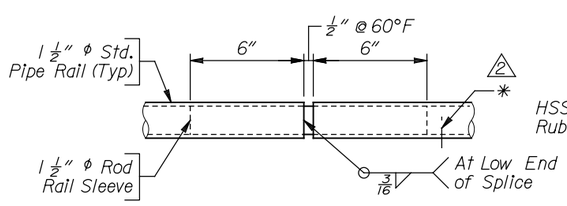

PIPE RAIL

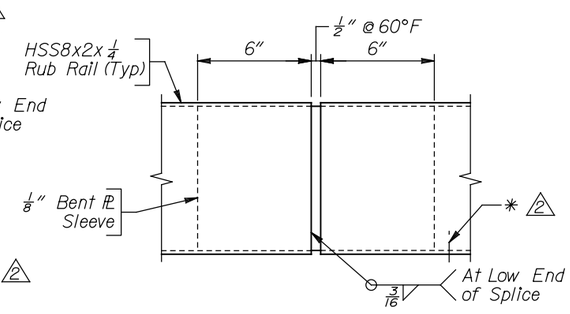

RUB RAIL

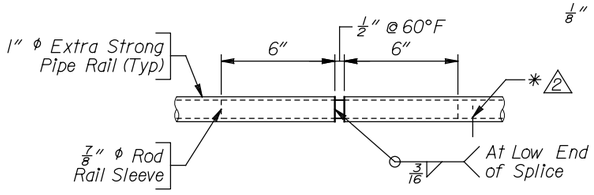

OVERLOOK RAIL

RAIL SPLICE DETAILS

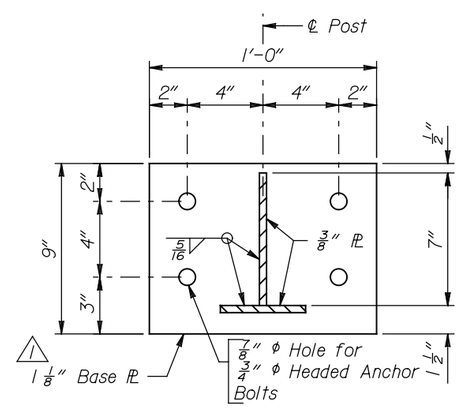

PLAN - BASE PLATE
AT INTERMEDIATE POSTS
AND OVERLOOK POSTS

* Drain hole at low end of member.

DRAWING TITLE
PEDESTRIAN RAILING DETAILS
PATHWAY 22 OVER SNAKE RIVER
STA. 30+38.71

REVISIONS
1 Revised 1-25-13
2 Added drain holes 2-5-13
3 Revised Rail Height 8-29-13

DRAWING NO 41
JOB NO 10-124-02
DATE 1/9/13

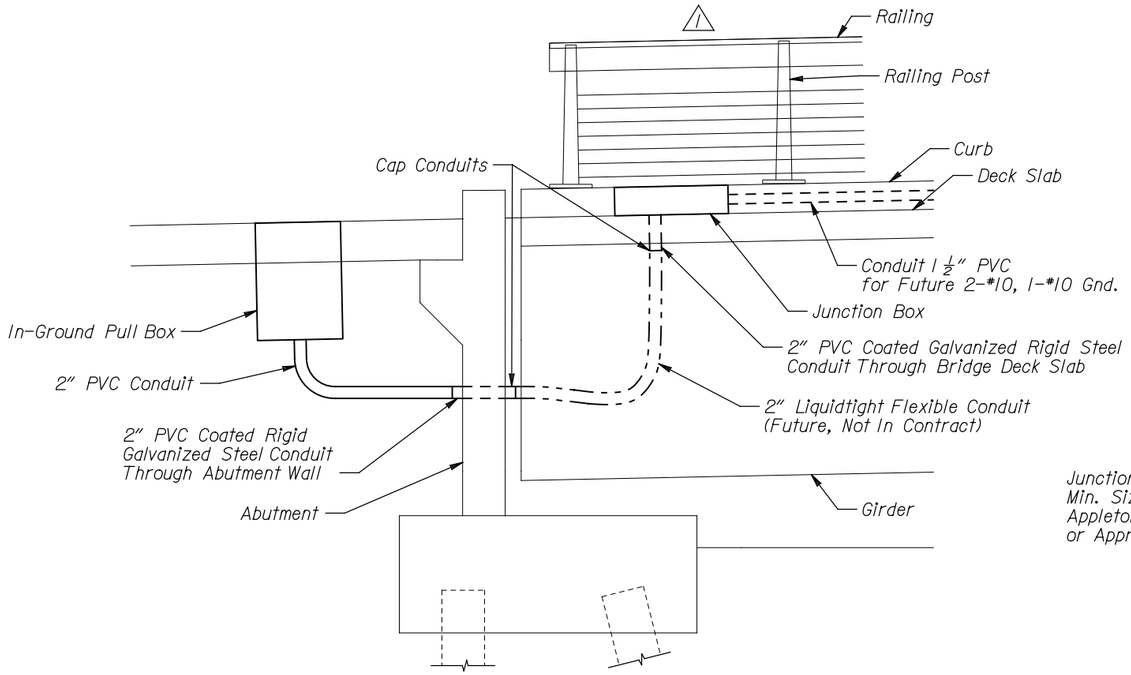

ABUTMENT ELEVATION VIEW

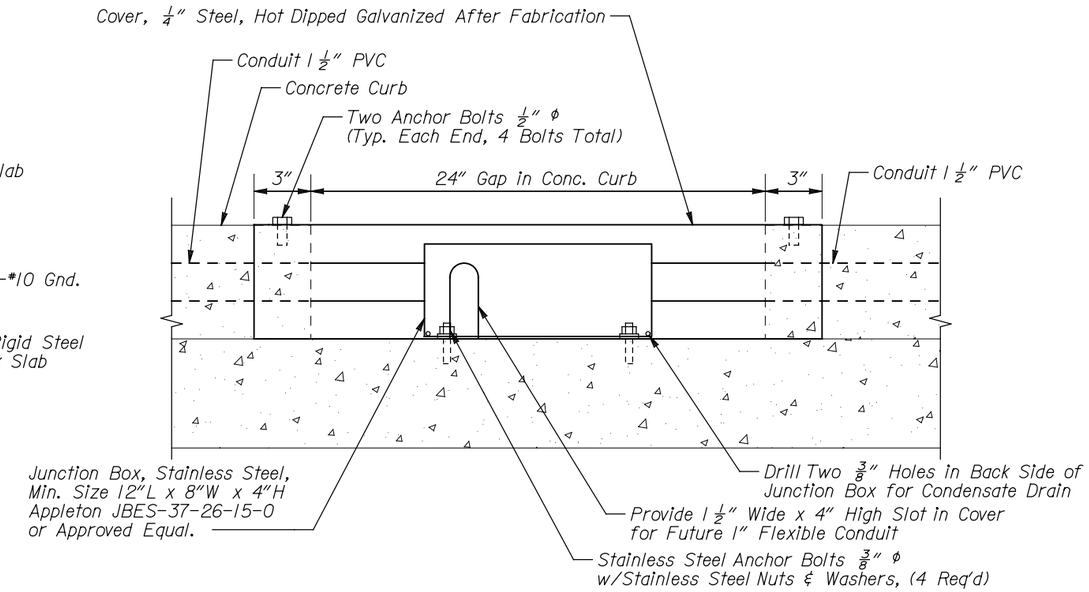

JUNCTION BOX MOUNTING DETAIL

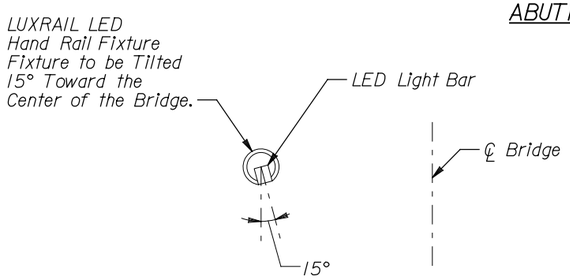

FIXTURE ORIENTATION

Note: Future Work, Not In Contract.

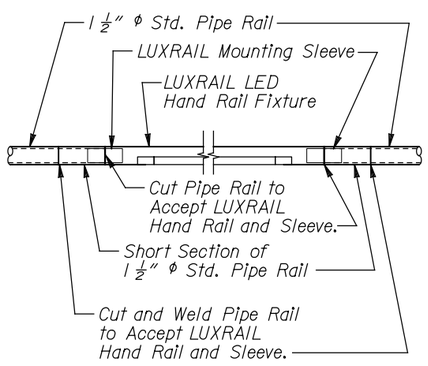

LUXRAIL MOUNTING DETAIL

Note: Future Work, Not In Contract.

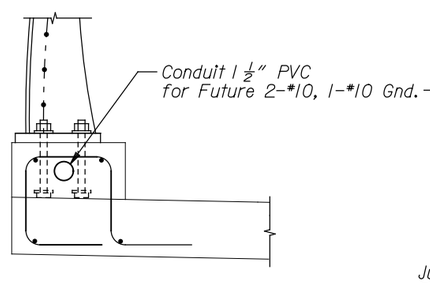

SECTION A-A

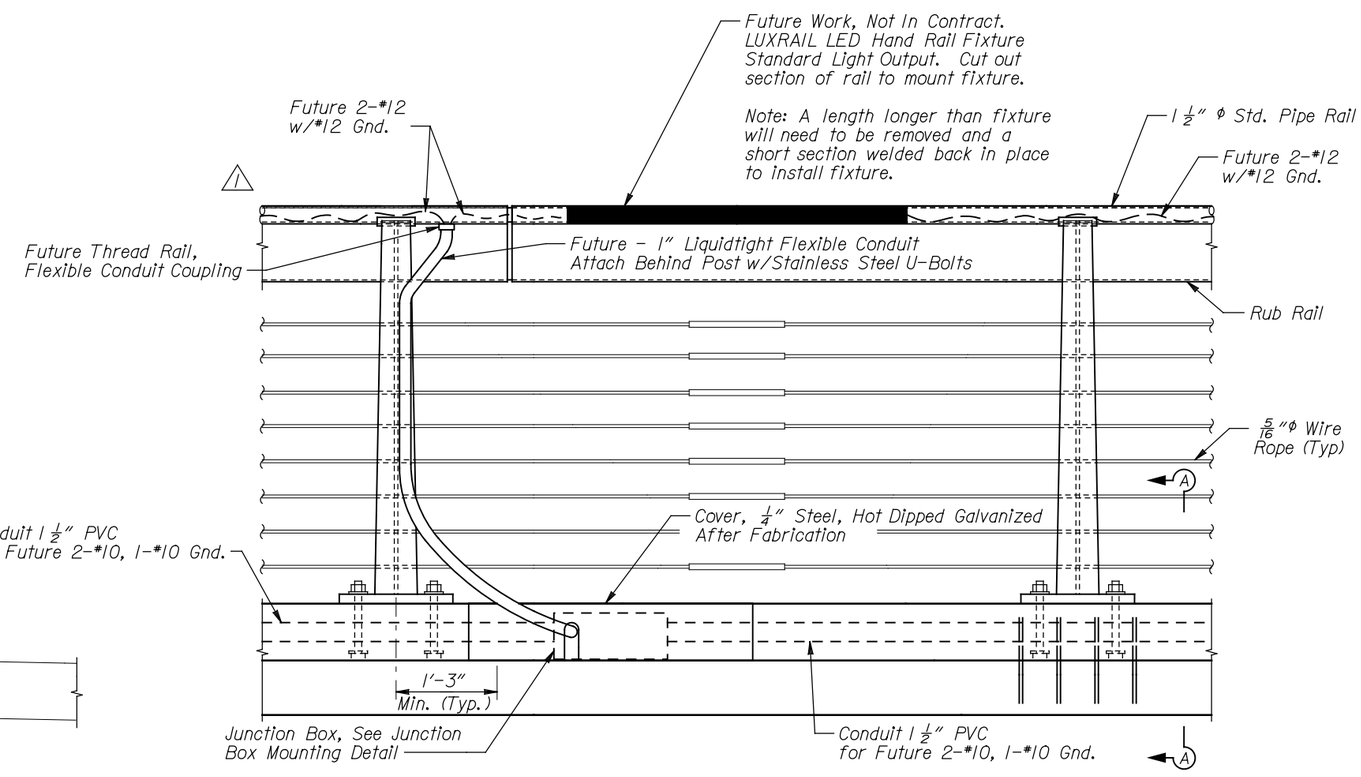

JUNCTION BOX DETAIL

DRAWING TITLE: PEDESTRIAN RAILING LIGHTING DETAILS

PATHWAY 22 OVER SNAKE RIVER

STA. 30+38.71

REVISIONS: Revised Rail Height 8-29-13

DRAWING NO: E003

JOB NO: 10-124-02

DATE: 1/9/13

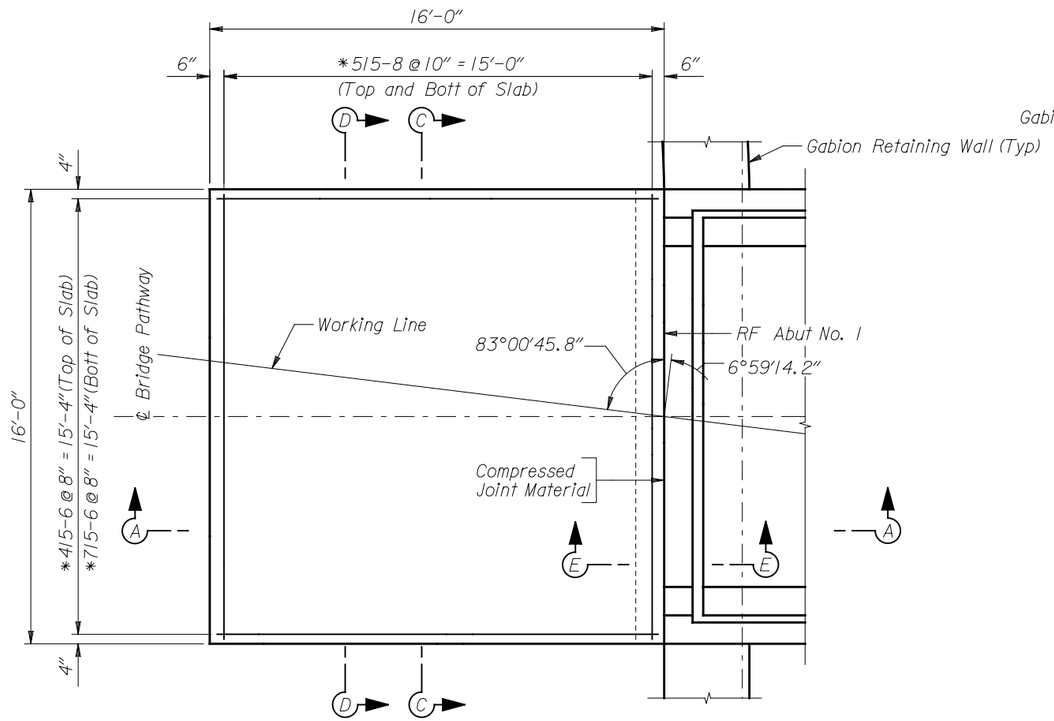

PLAN-ABUTMENT NO. 1

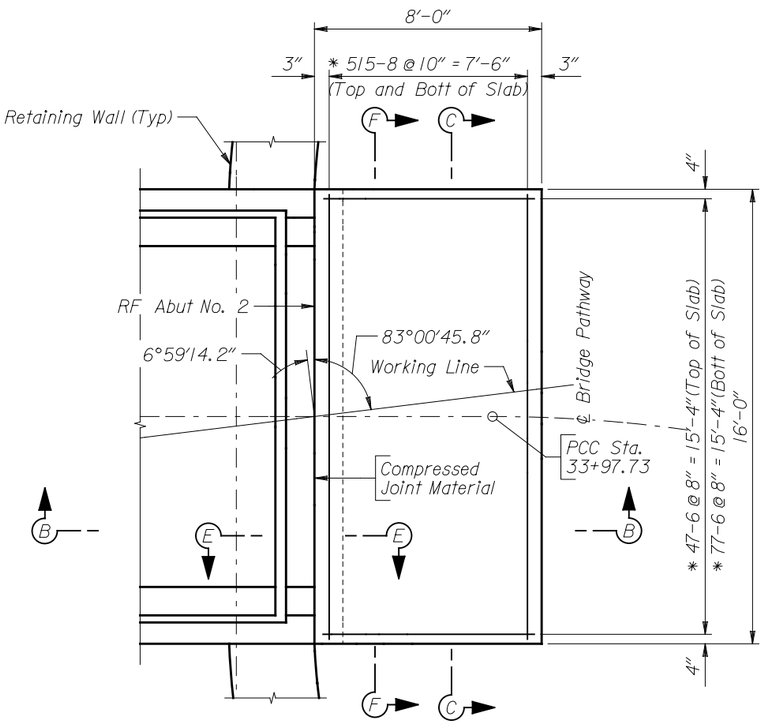

PLAN-ABUTMENT NO. 2

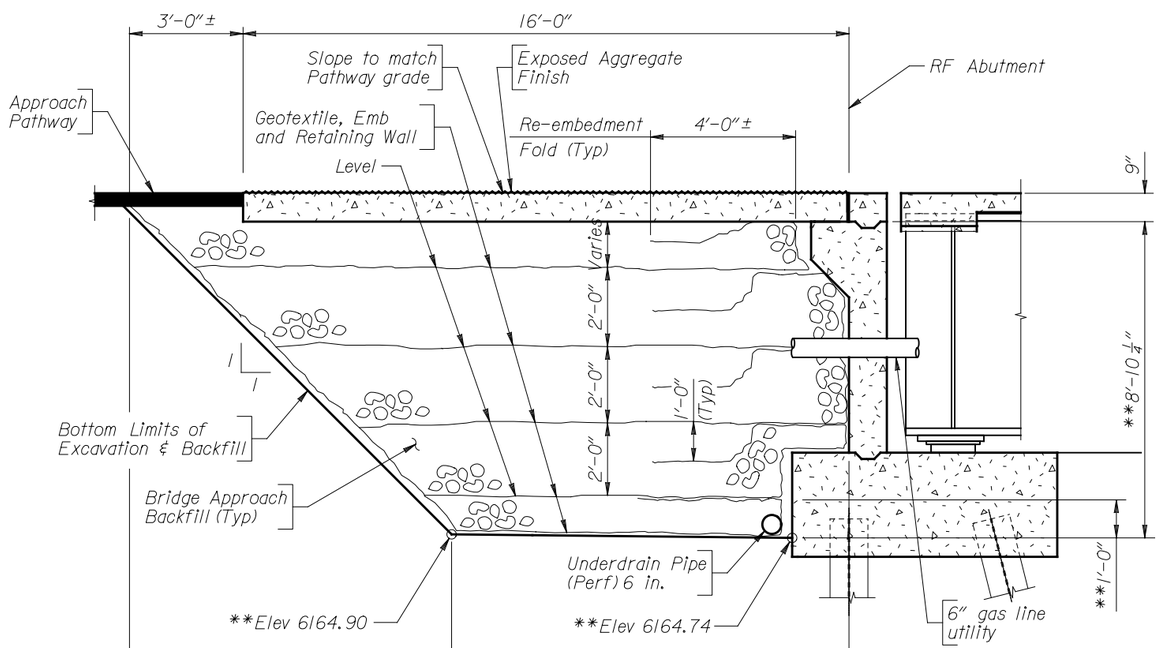

SECTION A-A

Note: 1) Elevations preceded by a double asterisk(**) are measured at ℄ Bridge Pathway.
2) For Sections "C-C thru F-F", see Sheet No. 43.
3) Use Class B concrete "Special" in approach slabs per Project Special Provision.

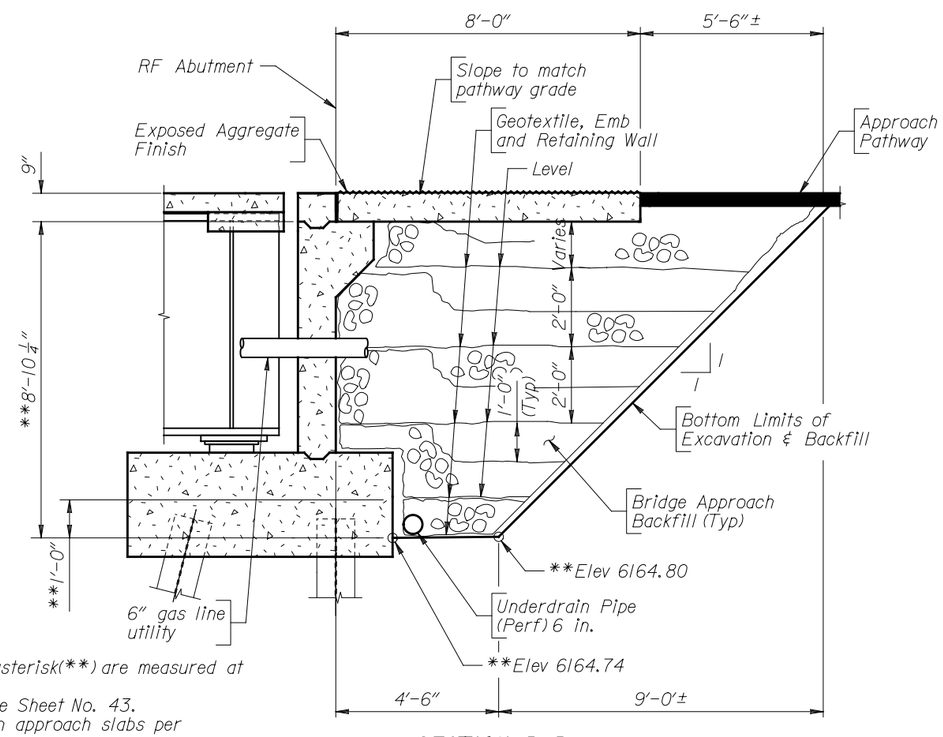

SECTION B-B

DRAWING TITLE
APPROACH SLAB DETAILS
PATHWAY 22 OVER SNAKE RIVER
STA. 30+38.71

REVISIONS

DRAWING NO 42
JOB NO 10-124-02
DATE 1/9/13

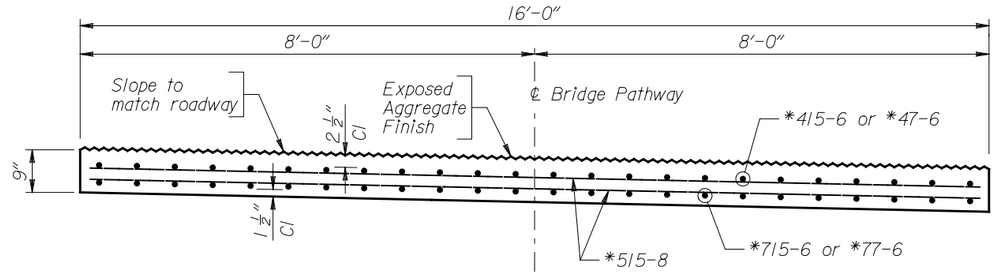

SECTION C-C

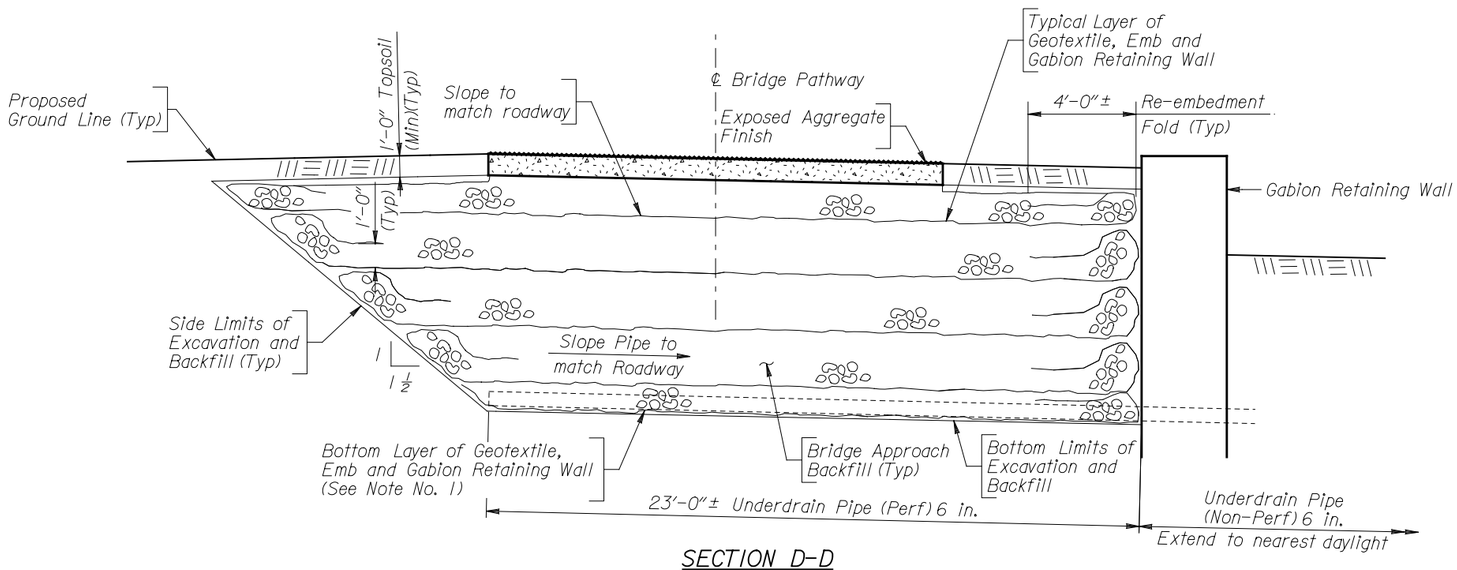

SECTION D-D

Abutment No. 1

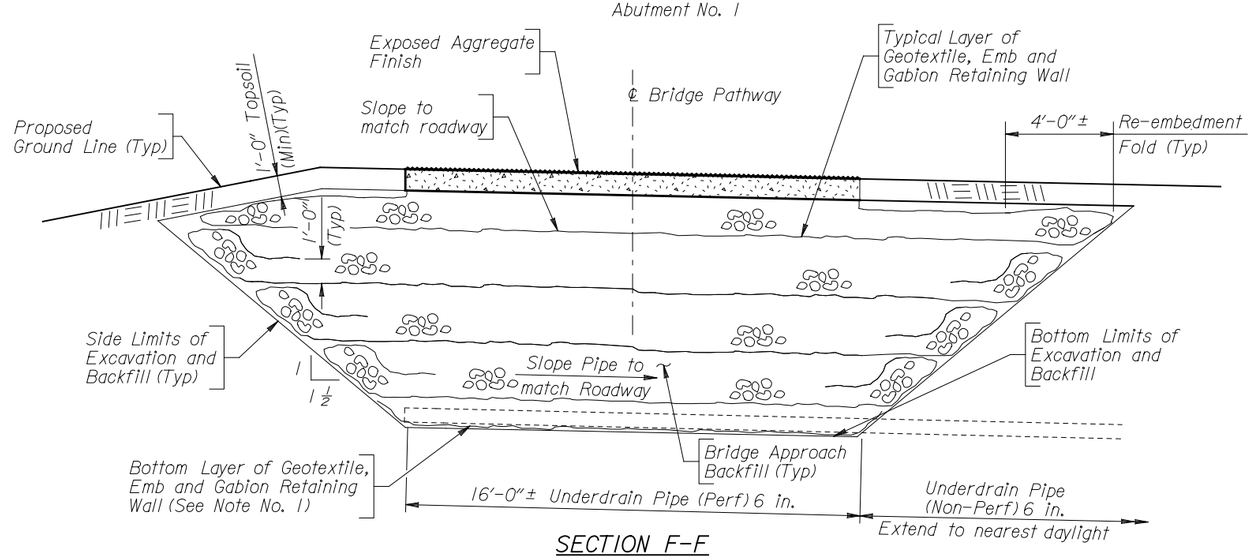

SECTION F-F

Abutment No. 2

BILL OF REINFORCEMENT		
Location	Mark	Number Required
Approach Slab	*47-6	24
	*415-6	24
	*77-6	24
	*715-6	24
	*515-8	29
	¤ *Weight	1970

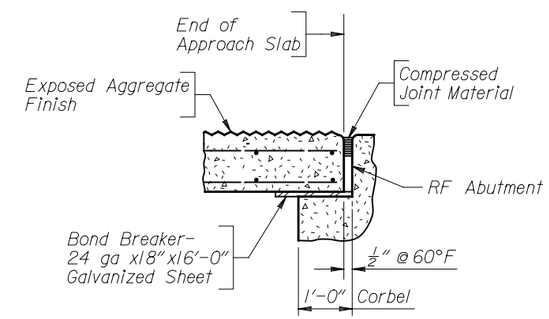

SECTION E-E

Note: 1) Extend bottom layer of geotextile up side limits of excavation and backfill to bottom of first layer of geotextile.
2) For locations of Sections "C-C thru F-F", see Sheet No. 42.
¤ 3) Approach slab reinforcing steel in not included in the quanitity of reinforcing steel.

DRAWING TITLE
APPROACH SLAB DETAILS
PATHWAY 22 OVER SNAKE RIVER
STA. 30+38.71

REVISIONS

DRAWING NO 43
JOB NO 10-124-02
DATE 1/9/13